GENERAL NOTES:

1. ALL DIMENSION ARE TO BACK OF CURB UNLESS NOTED OTHERWISE.

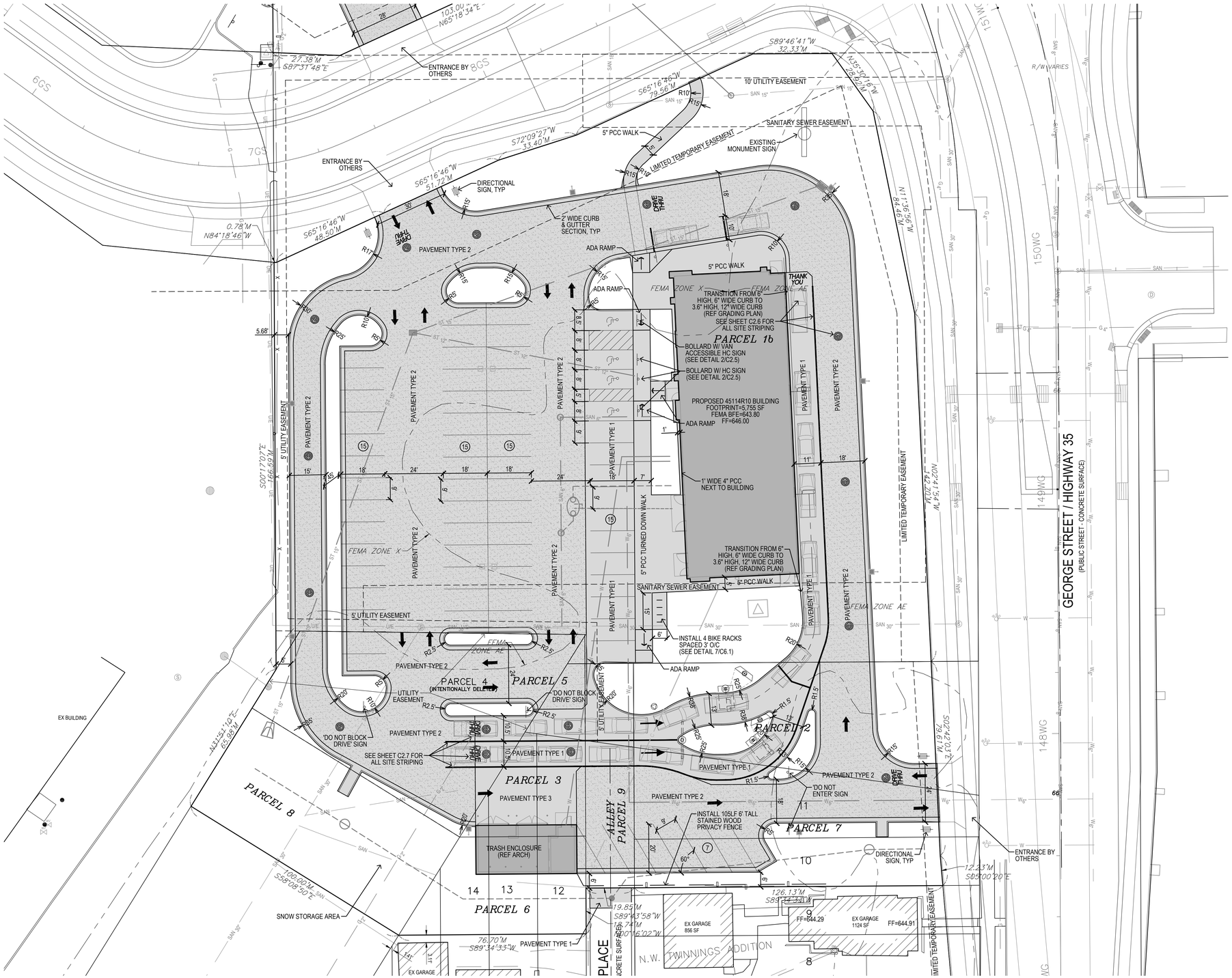

REV	DATE	DESCRIPTION	BY
1	2/16/17	1ST CITY SUBMITTAL	JEJ

PREPARED BY:

Bishop Engineering
"Planning Your Successful Development"
3501 104th Street
Des Moines, Iowa 50322-3825
Phone: (515)276-4467 Fax: (515)276-0217
Civil Engineering & Land Surveying Established 1959

PREPARED FOR:

McDonald's USA, LLC

© 2017 McDonald's USA, LLC

These drawings and specifications are the confidential and proprietary property of McDonald's USA, LLC and shall not be copied or reproduced without written authorization. The contract documents were prepared for use on this specific site in conjunction with its issue date and are not suitable for reuse on another project. All updates or revisions to these drawings for reference or example on another project requires the services of properly licensed architects and engineers. Reproduction of the contract documents for reuse on another project is not authorized.

DRAWN BY	JMR
STD ISSUE DATE	2/10/2017
REVIEWED BY	JEJ
DATE ISSUED	2/10/2017

TITLE: LA CROSSE, WI
SITE PLAN

DESCRIPTION: LAYOUT PLAN

SITE ID: 480054

SITE ADDRESS: 1140 W GEORGE ST, LA CROSSE, WI 54601

SHEET NO. C2.1

BE # 120207

2/16/2017 4:53:40 PM M:\LAND PROJECTS 2012\120207 LA CROSSE, WI - GEORGE ST\DWG\C2 LAYOUT.DWG

GENERAL NOTES:

1. ALL DIMENSION ARE TO BACK OF CURB UNLESS NOTED OTHERWISE.

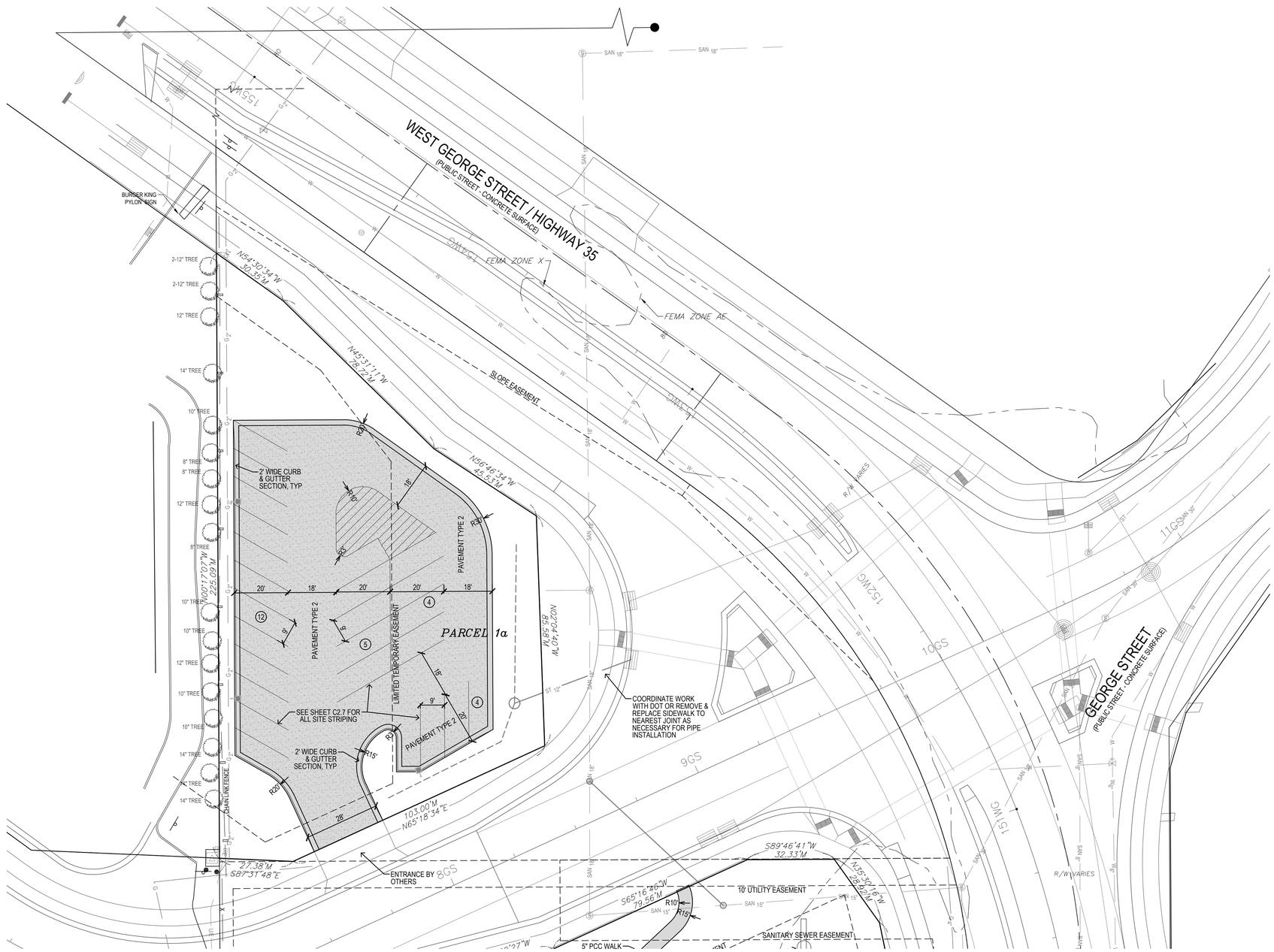

REV	DATE	DESCRIPTION	BY
1	2/16/17	1ST CITY SUBMITTAL	JEJ

PREPARED BY:

Bishop Engineering
"Planning Your Successful Development"
3501 104th Street
Des Moines, Iowa 50322-3825
Phone (515)276-0467 Fax (515)276-0217
Civil Engineering & Land Surveying Established 1959

PREPARED FOR:

McDonald's USA, LLC

© 2017 McDonald's USA, LLC

These drawings and specifications are the confidential and proprietary property of McDonald's USA, LLC and shall not be copied or reproduced without written authorization. The contract documents were prepared for use on this specific site in conjunction with its issue date and are not suitable for reuse on another project. Any other use of these drawings for reference or example on another project requires the services of properly licensed architects and engineers. Reproduction of the contract documents for reuse on another project is not authorized.

DRAWN BY: JMR
STD ISSUE DATE: 2/10/2017
REVIEWED BY: JEJ
DATE ISSUED: 2/10/2017

TITLE: LA CROSSE, WI
SITE PLAN

DESCRIPTION: LAYOUT PLAN

SITE ID: 480054

SITE ADDRESS: 1140 W GEORGE ST, LA CROSSE, WI 54601

SHEET NO.: C2.2

BE # 120207

2/16/2017 4:53:43 PM M:\LAND PROJECTS 2012\120207 LA CROSSE, WI - GEORGE ST\DWG\C2 LAYOUT.DWG

COD CONSTRUCTION NOTES:

(A) NEW CONCRETE CURB AND GUTTER SEE SHEET C2.1. MATCH AND BLEND NEW CURB AND GUTTER INTO EXISTING WHERE OCCURS.

(B) INSTALL NEW MENU BOARD. SEE SHEET C2.3 FOR FOUNDATION DETAIL, SHEET C2.5 FOR SCHEMATIC DETAIL AND SEE MANUFACTURER FOR INSTALLATION INSTRUCTIONS.

(C) PRIMARY LANE HIGH IMPACT COD AND CANOPY. LOCATE 100'± FROM ℄ OF COD TO ℄ OF CASH WINDOW MEASURED ALONG ℄ OF TRAVEL PATH. SEE SHEET C2.3 FOR FOUNDATION DETAIL, SHEET C2.5 FOR SCHEMATIC DETAIL AND MANUFACTURER FOR INSTALLATION INSTRUCTIONS.

(D) SECONDARY LANE HIGH IMPACT COD AND CANOPY. LOCATE 14'-0" FROM NOSE OF CONCRETE ISLAND. SEE SHEET C2.3 FOR FOUNDATION DETAIL, SHEET C2.5 FOR SCHEMATIC DETAIL AND MANUFACTURER FOR INSTALLATION INSTRUCTIONS.

(E) INSTALL PRIMARY LANE DETECTOR LOOP. SEE SHEET DT1.0 FOR DETAILS.

(F) INSTALL SECONDARY LANE DETECTOR LOOP 2'-0" FORWARD OF ℄ OF COD. FLIP LOOP FORWARD. SEE SHEET DT1.0 FOR DETAILS.

(G) DOUBLE ARM GATEWAY SIGN. CENTER OF THE FOOTING OF THE GATEWAY SIGN SHALL BE 12" TO 18" FROM THE BACK OF CURB. SEE SHEET C2.3 FOR FOUNDATION DETAIL, SHEET C2.5 FOR SCHEMATIC DETAIL AND MANUFACTURER FOR INSTALLATION INSTRUCTIONS.

(H) LANDSCAPED AREA.

(I) ANY LANE ANY TIME SIGN. ATTACH SIGN TO GATEWAY 6' FROM BOTTOM OF POST. SEE SHEET C2.5 FOR SCHEMATIC DETAIL AND MANUFACTURER FOR INSTALLATION INSTRUCTIONS.

(J) OPTIONAL PRE-SELL BOARD. BOARD SHALL BE LOCATED 30' FROMT THE ℄ OF THE PRIMARY COD TO THE ℄ OF THE PRE-SELL BOARD AND 12" TO 18" FROM THE BACK OF CURB. SEE SHEET C2.3 FOR FOUNDATION DETAIL, C2.5 FOR SCHEMATIC DETAIL, AND MANUFACTURER FOR INSTALLATION INSTRUCTIONS.

(K) INSTALL DETECTOR LOOPS AT CASH AND PRESENT WINDOWS, SEE SHEET DT1.0.

(L) INSTALL BOLLARD AT THE CORNER OF THE BUILDING ON THE DRIVE THRU SIDE. BOLLARD SHALL BE FLUSH AGAINST THE BUILDING AND THE FACE OF THE BOLLARD SHALL BE TIGHT AGAINST THE BACK OF CURB. SEE DETAIL 4 SHEET C2.5.

GENERAL NOTES:

1. SIGNAGE & DRIVE-THRU ELEMENTS:
   COD, DRIVE-THRU PYLON/CLEARANCE POLE, BOLLARD SIGN, AND FREESTANDING MERCHANDIZER SHALL BE CONSISTENT WITH THE 2013 STANDARD BUILDING DESIGN DRIVE-THRU ELEMENTS. OTHER DESIGNS MAY NOT BE USED.
2. GENERAL CONTRACTOR SHALL COORDINATE WITH CIVIL PLANS, MCDONALD'S PROJECT MANAGER, AND SIGNAGE SUPPLIER TO DETERMINE THE EXACT LOCATION, ORIENTATION, MOUNTING HEIGHTS, AND NUMBER OF SIGNS AND OTHER DRIVE-THRU ELEMENTS TO BE INSTALLED AT THIS SITE. ALL WORK SHALL BE COORDINATED WITH OTHER TRADES.
3. CONTACT MCDONALD'S PROJECT MANAGER FOR SIGNAGE & DRIVE-THRU ELEMENT FOOTING AND WIRING REQUIREMENTS. SIGNAGE MANUFACTURER TO PROVIDE FOOTING ANCHORS & TEMPLATES TO G.C. PRIOR TO FOUNDATION POURING.
4. SEE SHEET C2.5 AND ELECTRICAL SHEETS FOR DRIVE-THRU WIRING INFORMATION.
5. GENERAL CONTRACTOR TO COORDINATE THE RESPONSIBILITES OF THE ELECTRICAL CONTRACTOR AND THE SIGN SUPPLIER.
6. GENERAL CONTRACTOR TO INSTALL PRE-FORMED, PRE-WIRED VEHICLE DETECTOR LOOP.
7. GENERAL CONTRACTOR SHALL VERIFY CONDUIT SIZES REQUIRED BY VEHICLE LOOP DETECTOR SUPPLIER.

COD LAYOUT NOTES:

1. ALL DIMENSIONS ARE TO BACK OF CURB UNLESS NOTED OTHERWISE ON PLAN.
2. FIELD VERIFY AND CONFIRM EXISTING CONDITIONS AND DIMENSIONS PRIOR TO COMMENCING CONSTRUCTION. NOTIFY MCDONALD'S PROJECT MANAGER OF ANY DISCREPANCIES PRIOR TO COMMENCING CONSTRUCTION.
3. SEE SHEET C2.1 FOR ALL SITE DIMENSIONS.
4. SEE SHEET C2.6 FOR STRIPING.

GRAPHIC SCALE

10 0 5 10 20

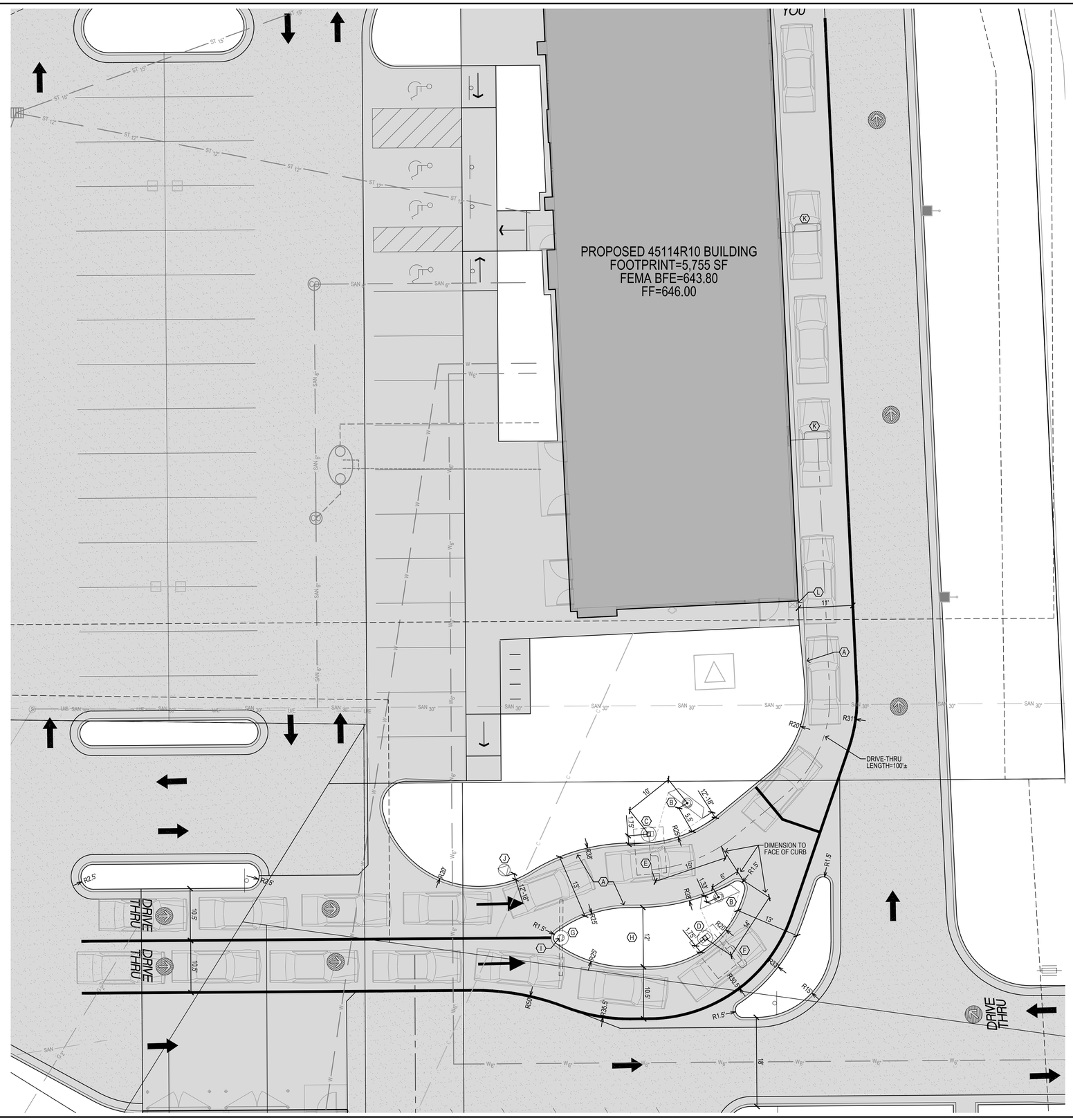

REV	DATE	DESCRIPTION	BY
1	2/16/17	1ST CITY SUBMITTAL	JEJ

PREPARED BY:

Bishop Engineering
"Planning Your Successful Development"
3501 104th Street
Des Moines, Iowa 50322-3825
Phone: (515)276-9467 Fax: (515)276-0217
Civil Engineering & Land Surveying Established 1959

PREPARED FOR:

McDonald's USA, LLC

© 2017 McDonald's USA, LLC

These drawings and specifications are the confidential and proprietary property of McDonald's USA, LLC and shall not be copied or reproduced without written authorization. The contract documents were prepared for use on this specific site in conjunction with its issue date and are model only for purposes of bidding and permits. Reproduction of these drawings for reference or example on another project requires the services of properly licensed architects and engineers. Reproduction of the contract documents for reuse on another project is not authorized.

DRAWN BY	JMR
STD ISSUE DATE	2/10/2017
REVIEWED BY	JEJ
DATE ISSUED	2/10/2017

TITLE: LA CROSSE, WI SITE PLAN

DESCRIPTION: COD LAYOUT PLAN

SITE ID: 480054

SITE ADDRESS: 1140 W GEORGE ST. LA CROSSE, WI 54601

SHEET NO. C2.3

BE# 120207

2/16/2017 5:09:28 PM M:\LAND PROJECTS 2012\120207 LA CROSSE, WI - GEORGE ST\DWG\C2 LAYOUT.DWG

NOTE:
-DESIGN CODES
IBC 2009
ASCE 7-05
ACI 318-08
AISC 13TH EDITION
AWS D1.1
WIND SPEED -- 100 MPH, 3 SEC GUST
-EXPOSURE C
-DESIGN LOADS DERIVED FROM THESE CODES AND FORCES
AXIAL LOAD -- 960 LBS
SHEAR FORCE -- 700 LBS
OVERTURNING MOMENT -- 5500 LB-FT
-USE 3000 PSI CONCRETE COMPRESSIVE STRENGTH (f'c)
-PIER DEPTHS REQUIRED ARE MINIMUMS. ALL PIERS TO EXTEND TO FROST DEPTH AS DETERMINED BY LOCAL JURISDICTION.
-TOP OF PIERS SHALL BE SLOPED SUCH THAT MOISTURE CANNOT ACCUMULATE.
-ELECTRICAL CONTRACTOR TO PROVIDE INFORMATION ON CONDUIT AND ELECTRICAL REQUIREMENTS.
-MINIMUM ALLOWABLE LATERAL SOIL BEARING PRESSURE 100 PSF/FT OF DEPTH x2.
-TOP 6" OF SOIL NEGLECTED IN EMBEDMENT DEPTH CALCULATIONS (EMBEDMENT DEPTHS SHOWN ARE FROM GRADE)
-3" MIN. CONCRETE COVER FOR REINFORCEMENT
-ALL REINFORCING STEEL BY GENERAL CONTRACTOR

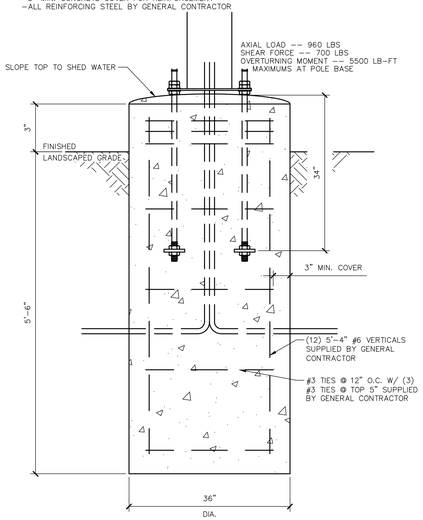

1 C2.3 DOUBLE GATEWAY DETAILS 100 MPH NTS

NOTES:
-TOP OF PIERS SHALL BE SLOPED SUCH THAT MOISTURE CANNOT ACCUMULATE.
-HOT DIPPED GALVANIZED BOLTS
-F1554 GRADE 36 ANCHOR BOLTS
-ANCHOR BOLTS TO BE SET IN ACCORDANCE WITH AISC CODE OF STANDARD PRACTICE
-ANCHOR RODS, NUTS, AND WASHERS SHALL BE SHIPPED AS AN ASSEMBLY FROM THE SIGN/LIGHTING MANUFACTURER
-DO NOT CUT ANCHOR BOLTS AFTER INSTALLATION OF POLE

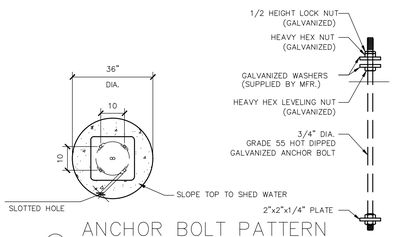

A ANCHOR BOLT PATTERN NTS

NOTES:
-TOP OF PIERS SHALL BE SLOPED SUCH THAT MOISTURE CANNOT ACCUMULATE.
-ANCHOR RODS, NUTS, AND WASHERS SHALL BE SHIPPED AS AN ASSEMBLY FROM THE SIGN/LIGHTING MANUFACTURER
-DO NOT CUT ANCHOR BOLTS AFTER INSTALLATION OF POLE

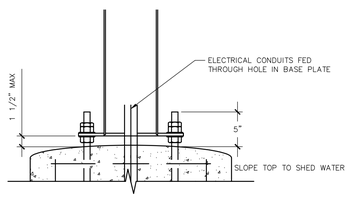

B CONNECTION DETAILS NTS

GENERAL NOTES

-THE FOLLOWING CODES WERE USED IN DESIGN:
-IBC 2009
-ASCE 7-05
-ACI 318-08
-AISC 13th EDITION
-AWS D1.1
-WIND SPEED 100 MPH, 3 SEC GUST
-EXPOSURE C
-DESIGN LOADS DERIVED FROM THESE CODES AND FORCES
-AXIAL - 960 LBS
-SHEAR - 700 LBS
-MOMENT - 5500 LB-FT

-ALL FOOTING EXCAVATIONS ARE TO BE CLEAR OF WATER AND FOREIGN MATTER BEFORE PLACING CONCRETE.
-MINIMUM ALLOWABLE LATERAL SOIL BEARING PRESSURE OF 100PSF/FT (x2)
-SITE SOIL CONDITIONS TO BE CONFIRMED BY GEOTECHNICAL ENGINEER. IF ASSUMED SOIL CONDITIONS ARE NOT PRESENT, FOUNDATION SHALL BE DESIGNED BY A LICENSED STRUCTURAL ENGINEER TAKING INTO ACCOUNT ACTUAL SITE SOIL CONDITIONS.
-TOP 6" OF SOIL NEGLECTED IN EMBEDMENT DEPTH CALCULATIONS (EMBEDMENT DEPTHS SHOWN ARE FROM GRADE)

-ELECTRICAL CONTRACTOR TO PROVIDE INFORMATION ON CONDUIT AND ELECTRICAL REQUIREMENTS.

CONCRETE:

-ALL FOOTINGS SHALL BEAR ON FIRM UNDISTURBED RESIDUAL SOIL AND/OR ENGINEERED EARTH FILL COMPACTED TO 98% OF ITS MAXIMUM DRY DENSITY AS PER ASTM D 698-70 (STANDARD PROCTOR) UNLESS NOTED OTHERWISE.
-ALL PIERS TO EXTEND TO FROST DEPTH AS DETERMINED BY LOCAL JURISDICTION.
-TOP OF PIERS SHALL BE SLOPED SUCH THAT MOISTURE CANNOT ACCUMULATE.
-MINIMUM CONCRETE STRENGTH (f'c) SHOULD CONFORM WITH MCDONALDS CAST-IN-PLACE CONCRETE SPECIFICATIONS SECTION 2.13-A
-USE OF ADMIXTURES SHALL CONFORM TO MCDONALDS CAST-IN-PLACE CONCRETE SPECIFICATION SECTION 2.6
-AIR ENTRAINMENT SHALL CONFORM WITH MCDONALDS CAST-IN-PLACE CONCRETE SPECIFICATION SECTIONS 2.6-A & 2.13-A
-WATER CONTENT RATIO SHALL CONFORM TO MCDONALDS CAST-IN-PLACE CONCRETE SPECIFICATIONS SECTION 2.13-A
-FOUNDATION CONCRETE TO BE TESTED PER MCDONALDS CAST-IN-PLACE CONCRETE SPECIFICATIONS SECTION 3.14
-PROVIDE A MINIMUM 3" OF CONCRETE COVER OVER ALL EMBEDDED STEEL.
-REINFORCEMENT PLACEMENT SHALL CONFORM TO MCDONALDS CAST-IN-PLACE CONCRETE SPECIFICATIONS SECTIONS 3.2 & 3.5. PERFORMED BY GENERAL CONTRACTOR.
-ANCHOR BOLTS TO BE SET IN ACCORDANCE WITH AISC CODE OF STANDARD PRACTICE.
-DO NOT PLACE POLES ON CONCRETE UNTIL CONCRETE HAS CURED PER MCDONALDS CAST-IN-PLACE CONCRETE SPECIFICATION, SECTION 3.11-E.

STEEL:

-STEEL PIPE SECTION: ASTM A53 OR A252 TYPE E GRADE B (Fy = 35ksi)
-HSS ROUND SECTION: ASTM A500 GRADE B (Fy = 42ksi)
-HSS SQUARE/RECTANGULAR SECTIONS: ASTM A500 GRADE B (Fy = 46ksi)
-CONNECTION BOLTS A325
-STEEL ANGLES, CHANNELS, STRUCTURAL SHAPES AND PLATES: ASTM A36
-REINFORCEMENT: GRADE 60 - BY GENERAL CONTRACTOR
-NUTS: A563DH OR A194-2H
-WASHERS: A36
-USE HOT DIPPED GALVANIZED BOLTS AND FASTENERS
-ANCHOR RODS, NUTS, AND WASHERS SHALL BE SHIPPED AS AN ASSEMBLY FROM THE SIGN/LIGHTING MANUFACTURER
-NO FIELD HEATING TO BEND STEEL SHALL BE ALLOWED WITHOUT ENGINEER'S APPROVAL.
-DO NOT CUT ANCHOR BOLTS AFTER INSTALLATION OF POLE
-AFTER INSTALLATION, ALL EXPOSED STEEL SHALL BE PAINTED WITH AN ENAMEL PAINT TO INHIBIT CORROSION.
-ANY FIELD WELDING SHALL FIRST BE VERIFIED BY ENGINEER AND PERFORMED IN ACCORDANCE WITH AWS D1.1.

-REFER TO SIGN MANUFACTURER DRAWINGS AND INSTRUCTIONS FOR ADDITIONAL INFORMATION.
-CONTRACTOR (INSTALLER) IS RESPONSIBLE FOR THE MEANS AND METHODS OF CONSTRUCTION IN REGARDS TO JOBSITE SAFETY.
-DETAILS AND STRUCTURAL MEMBERS NOT SHOWN DESIGNED BY OTHERS
-ANY MODIFICATIONS ARE TO BE VERIFIED BY AN ENGINEER

ACCRUENT UPLOAD DATE: 11/1/2012

NOTE:
-DESIGN CODES
IBC 2009
ASCE 7-05
ACI 318-08
AISC 13th EDITION
AWS D1.1
-WIND SPEED-100 MPH (MPH 3-SEC GUST)
-EXPOSURE C
-DESIGN LOADS DERIVED FROM THESE CODES AND FORCES (#, #')
-AXIAL-2600 LBS
-SHEAR-2900 LBS
-OVERTURNING MOMENT-14,500 LB-FT
-USE CONCRETE WITH A 3000PSI MINIMUM COMPRESSIVE STRENGTH (f'c).
-PIER DEPTHS REQUIRED ARE MINIMUMS. ALL PIERS TO EXTEND TO FROST DEPTH AS DETERMINED BY LOCAL JURISDICTION.
-TOP OF PIERS SHALL BE SLOPED SUCH THAT MOISTURE CANNOT ACCUMULATE.
-ELECTRICAL CONTRACTOR TO PROVIDE INFORMATION ON CONDUIT AND ELECTRICAL REQUIREMENTS.
-MINIMUM ALLOWABLE LATERAL SOIL BEARING PRESSURE 100 PSF/FT OF DEPTH (x2)
-TOP 6" OF SOIL NEGLECTED IN EMBEDMENT DEPTH CALCULATIONS (EMBEDMENT DEPTHS SHOWN ARE FROM GRADE).
-PROVIDE A MINIMUM OF 3" CONCRETE COVER FOR ALL EMBEDDED STEEL.
-FOUNDATION IS DESIGNED FOR SINGLE OR DOUBLE POLE COLUMNS
-ALL REINFORCING STEEL BY GENERAL CONTRACTOR.

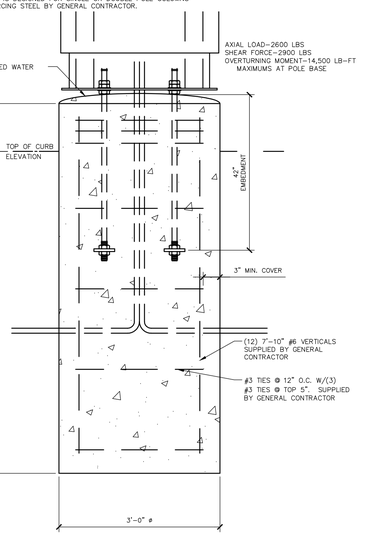

2 C2.3 ORDER HERE CANOPY 100 MPH NTS

NOTES:
-TOP OF PIERS SHALL BE SLOPED SUCH THAT MOISTURE CANNOT ACCUMULATE
-USE F1554 GRADE 36 BOLTS MINIMUM
-USE HOT DIPPED GALVANIZED BOLTS
-ANCHOR BOLTS TO BE SET IN ACCORDANCE WITH AISC CODE OF STANDARD PRACTICE
-ANCHOR RODS, NUTS, AND WASHERS SHALL BE SHIPPED AS AN ASSEMBLY FROM THE SIGN/LIGHTING MANUFACTURER
-DO NOT CUT ANCHOR BOLTS AFTER INSTALLATION OF POLE

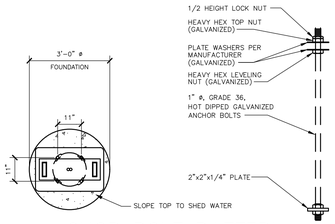

A ANCHOR BOLT PATTERN NTS

NOTES:
-TOP OF PIERS SHALL BE SLOPED SUCH THAT MOISTURE CANNOT ACCUMULATE.
-ANCHOR RODS, NUTS, AND WASHERS SHALL BE SHIPPED AS AN ASSEMBLY FROM THE SIGN/LIGHTING MANUFACTURER
-DO NOT CUT ANCHOR BOLTS AFTER INSTALLATION OF POLE

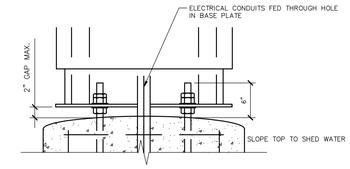

B CONNECTION DETAILS NTS

GENERAL NOTES

-THE FOLLOWING CODES WERE USED IN DESIGN:
-IBC 2009
-ASCE 7-05
-ACI 318-08
-AISC 13th EDITION
-AWS D1.1
-WIND SPEED 100 MPH, 3 SEC GUST
-EXPOSURE C
-DESIGN LOADS DERIVED FROM THESE CODES AND FORCES
-AXIAL - 2600 LBS
-SHEAR - 2900 LBS
-MOMENT - 14,500 LB-FT

-ALL FOOTING EXCAVATIONS ARE TO BE CLEAR OF WATER AND FOREIGN MATTER BEFORE PLACING CONCRETE
-MINIMUM ALLOWABLE LATERAL SOIL BEARING PRESSURE OF 100PSF/FT (x2)
-SITE SOIL CONDITIONS TO BE CONFIRMED BY GEOTECHNICAL ENGINEER. IF ASSUMED SOIL CONDITIONS ARE NOT PRESENT, FOUNDATION SHALL BE DESIGNED BY A LICENSED STRUCTURAL ENGINEER TAKING INTO ACCOUNT ACTUAL SITE SOIL CONDITIONS.
-TOP 6" OF SOIL NEGLECTED IN EMBEDMENT DEPTH CALCULATIONS (EMBEDMENT DEPTHS SHOWN ARE FROM GRADE)

-ELECTRICAL CONTRACTOR TO PROVIDE INFORMATION ON CONDUIT AND ELECTRICAL REQUIREMENTS.

CONCRETE:

-ALL FOOTINGS SHALL BEAR ON FIRM UNDISTURBED RESIDUAL SOIL AND/OR ENGINEERED EARTH FILL COMPACTED TO 98% OF ITS MAXIMUM DRY DENSITY AS PER ASTM D 698-70 (STANDARD PROCTOR) UNLESS NOTED OTHERWISE.
-ALL PIERS TO EXTEND TO FROST DEPTH AS DETERMINED BY LOCAL JURISDICTION.
-TOP OF PIERS SHALL BE SLOPED SUCH THAT MOISTURE CANNOT ACCUMULATE.
-MINIMUM CONCRETE STRENGTH (f'c) SHOULD CONFORM WITH MCDONALDS CAST-IN-PLACE CONCRETE SPECIFICATIONS SECTION 2.13-A
-USE OF ADMIXTURES SHALL CONFORM TO MCDONALDS CAST-IN-PLACE CONCRETE SPECIFICATION SECTION 2.6
-AIR ENTRAINMENT SHALL CONFORM WITH MCDONALDS CAST-IN-PLACE CONCRETE SPECIFICATION SECTIONS 2.6-A & 2.13-A
-WATER CONTENT RATIO SHALL CONFORM TO MCDONALDS CAST-IN-PLACE CONCRETE SPECIFICATIONS SECTION 2.13-A
-FOUNDATION CONCRETE TO BE TESTED PER MCDONALDS CAST-IN-PLACE CONCRETE SPECIFICATIONS SECTION 3.14
-PROVIDE A MINIMUM 3" OF CONCRETE COVER OVER ALL EMBEDDED STEEL.
-REINFORCEMENT PLACEMENT SHALL CONFORM TO MCDONALDS CAST-IN-PLACE CONCRETE SPECIFICATIONS SECTIONS 3.2 & 3.5. PERFORMED BY GENERAL CONTRACTOR.
-ANCHOR BOLTS TO BE SET IN ACCORDANCE WITH AISC CODE OF STANDARD PRACTICE.
-DO NOT PLACE POLES ON CONCRETE UNTIL CONCRETE HAS CURED PER MCDONALDS CAST-IN-PLACE CONCRETE SPECIFICATION, SECTION 3.11-E.

STEEL:

-STEEL PIPE SECTION: ASTM A53 OR A252 TYPE E GRADE B (Fy = 35ksi)
-HSS ROUND SECTION: ASTM A500 GRADE B (Fy = 42ksi)
-HSS SQUARE/RECTANGULAR SECTIONS: ASTM A500 GRADE B (Fy = 46ksi)
-CONNECTION BOLTS A325
-STEEL ANGLES, CHANNELS, STRUCTURAL SHAPES AND PLATES: ASTM A36
-REINFORCEMENT: GRADE 60 - BY GENERAL CONTRACTOR
-NUTS: A563DH OR A194-2H
-WASHERS: A36
-USE HOT DIPPED GALVANIZED BOLTS AND FASTENERS
-ANCHOR RODS, NUTS, AND WASHERS SHALL BE SHIPPED AS AN ASSEMBLY FROM THE SIGN/LIGHTING MANUFACTURER
-NO FIELD HEATING TO BEND STEEL SHALL BE ALLOWED WITHOUT ENGINEER'S APPROVAL.
-DO NOT CUT ANCHOR BOLTS AFTER INSTALLATION OF POLE
-AFTER INSTALLATION, ALL EXPOSED STEEL SHALL BE PAINTED WITH AN ENAMEL PAINT TO INHIBIT CORROSION.
-ANY FIELD WELDING SHALL FIRST BE VERIFIED BY ENGINEER AND PERFORMED IN ACCORDANCE WITH AWS D1.1.

-REFER TO SIGN MANUFACTURER DRAWINGS AND INSTRUCTIONS FOR ADDITIONAL INFORMATION.
-CONTRACTOR (INSTALLER) IS RESPONSIBLE FOR THE MEANS AND METHODS OF CONSTRUCTION IN REGARDS TO JOBSITE SAFETY.
-FOUNDATIONS ARE DESIGNED FOR SINGLE OR DOUBLE POLE COLUMNS
-DETAILS AND STRUCTURAL MEMBERS NOT SHOWN DESIGNED BY OTHERS
-ANY MODIFICATIONS ARE TO BE VERIFIED BY AN ENGINEER

ACCRUENT UPLOAD DATE: 11/2/2012

NOTES:
-PIER DEPTHS REQUIRED ARE MINIMUMS. ALL PIERS TO EXTEND TO FROST DEPTH AS DETERMINED BY LOCAL JURISDICTION.
-TOP OF PIERS SHALL BE SLOPED SUCH THAT MOISTURE CANNOT ACCUMULATE.
-MINIMUM ALLOWABLE LATERAL SOIL BEARING PRESSURE 100 PSF/FT OF DEPTH (x2)
-ALL REINFORCING STEEL BY GENERAL CONTRACTOR

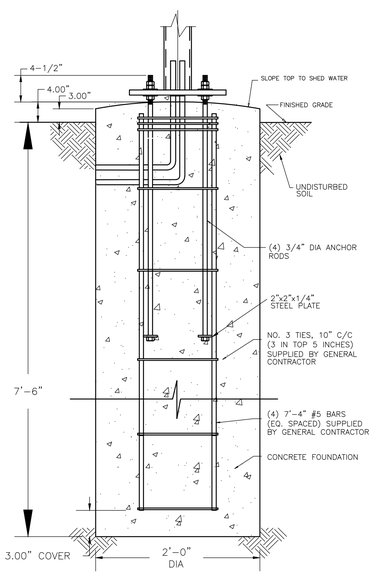

3 C2.3 FP43-OPO MENUBOARD FOUNDATION-90 MPH NTS

NOTES:
-TOP OF PIERS SHALL BE SLOPED SUCH THAT MOISTURE CANNOT ACCUMULATE.
-ANCHOR RODS, NUTS, AND WASHERS SHALL BE SHIPPED AS AN ASSEMBLY FROM THE SIGN/LIGHTING MANUFACTURER

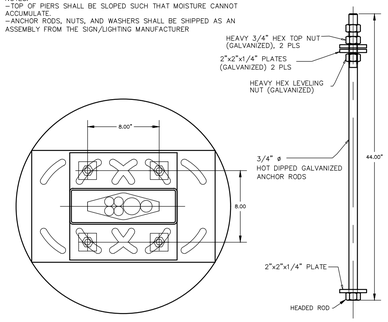

A ANCHOR BOLT PATTERN NTS

NOTES:
-TOP OF PIERS SHALL BE SLOPED SUCH THAT MOISTURE CANNOT ACCUMULATE.
-ANCHOR RODS, NUTS, AND WASHERS SHALL BE SHIPPED AS AN ASSEMBLY FROM THE SIGN/LIGHTING MANUFACTURER
-DO NOT CUT ANCHOR BOLTS AFTER INSTALLATION OF POLE

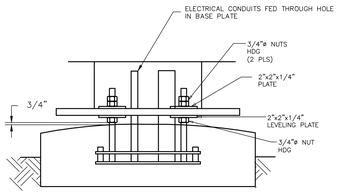

B CONNECTION DETAILS NTS

GENERAL NOTES

ACCRUENT UPLOAD DATE: 11/2/2012

NOTES:
-PIER DEPTHS REQUIRED ARE MINIMUMS. ALL PIERS TO EXTEND TO FROST DEPTH AS DETERMINED BY LOCAL JURISDICTION.
-TOP OF PIERS SHALL BE SLOPED SUCH THAT MOISTURE CANNOT ACCUMULATE.
-MINIMUM ALLOWABLE LATERAL SOIL BEARING PRESSURE 100 PSF/FT OF DEPTH (x2)
-ALL REINFORCING STEEL BY GENERAL CONTRACTOR

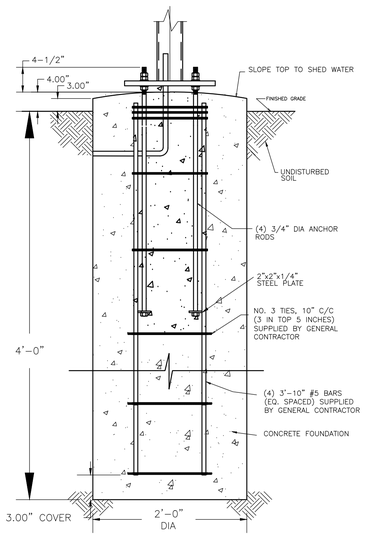

4 C2.3 OPO PRE-SELL FOUNDATION-90 MPH NTS

NOTES:
-TOP OF PIERS SHALL BE SLOPED SUCH THAT MOISTURE CANNOT ACCUMULATE.
-ANCHOR RODS, NUTS, AND WASHERS SHALL BE SHIPPED AS AN ASSEMBLY FROM THE SIGN/LIGHTING MANUFACTURER

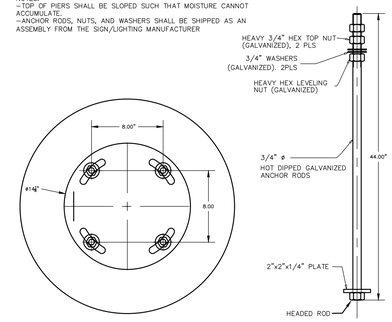

A ANCHOR BOLT PATTERN NTS

NOTES:
-TOP OF PIERS SHALL BE SLOPED SUCH THAT MOISTURE CANNOT ACCUMULATE.
-ANCHOR RODS, NUTS, AND WASHERS SHALL BE SHIPPED AS AN ASSEMBLY FROM THE SIGN/LIGHTING MANUFACTURER
-DO NOT CUT ANCHOR BOLTS AFTER INSTALLATION OF POLE

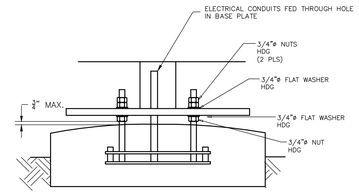

B CONNECTION DETAILS NTS

GENERAL NOTES

ACCRUENT UPLOAD DATE: 11/2/2012

REV	DATE	DESCRIPTION	BY
1	2/16/17	1ST CITY SUBMITTAL	JEJ

PREPARED BY:

Bishop Engineering
"Planning Your Successful Development"
3501 104th Street
Des Moines, Iowa 50322-3825
Phone: (515)276-4467 Fax: (515)276-0217
Civil Engineering & Land Surveying Established 1959

PREPARED FOR:
McDonald's USA, LLC

© 2017 McDonald's USA, LLC
These drawings and specifications are the confidential and proprietary property of McDonald's USA, LLC and shall not be copied or reproduced without written authorization. The contract documents were prepared for use on this specific site in conjunction with its issue date and are not suitable for use on other projects. Alterations to any of these drawings for reference or example on another project requires the services of properly licensed architects and engineers. Reproduction of the contract documents for reuse on another project is not authorized.

DRAWN BY	REVIEWED BY
JMR	JEJ
STD ISSUE DATE 2/10/2017	DATE ISSUED 2/10/2017

TITLE: LA CROSSE, WI
SITE PLAN
DESCRIPTION: DRIVE-THRU DETAILS
SITE ID: 480054
SITE ADDRESS: 1140 W GEORGE ST, LA CROSSE, WI 54601
SHEET NO. C2.4
BE # 120207

2/16/2017 4:53:49 PM M:\LAND PROJECTS 2012\120207 LA CROSSE, WI - GEORGE ST\DWG\C2 LAYOUT.DWG

NOTE:
-DESIGN CODES
IBC 2009
ASCE 7-05
ACI 318-08
AISC 13th EDITION
AWS D1.1
-WIND SPEED (100 MPH 3-SEC GUST)
-EXPOSURE C
-DESIGN LOADS DERIVED FROM THESE CODES AND FORCES
-AXIAL - 180#
-SHEAR - 270#
-MOMENT - 1010#'
-USE CONCRETE WITH A 3000PSI MINIMUM COMPRESSIVE STRENGTH (f'c).
-PIER DEPTHS REQUIRED ARE MINIMUMS. ALL PIERS TO EXTEND TO FROST DEPTH AS DETERMINED BY LOCAL JURISDICTION.
-TOP OF PIERS SHALL BE SLOPED SUCH THAT MOISTURE CANNOT ACCUMULATE.
-ELECTRICAL CONTRACTOR TO PROVIDE INFORMATION ON CONDUIT AND ELECTRICAL REQUIREMENTS.
-MINIMUM ALLOWABLE LATERAL SOIL BEARING PRESSURE 100 PSF/FT OF DEPTH (x2)
-TOP 6" OF SOIL NEGLECTED IN EMBEDMENT DEPTH CALCULATIONS (EMBEDMENT DEPTHS SHOWN ARE FROM GRADE).
-PROVIDE A MINIMUM OF 3" CONCRETE COVER FOR ALL EMBEDDED STEEL.
-ALL REINFORCING STEEL BY GENERAL CONTRACTOR.

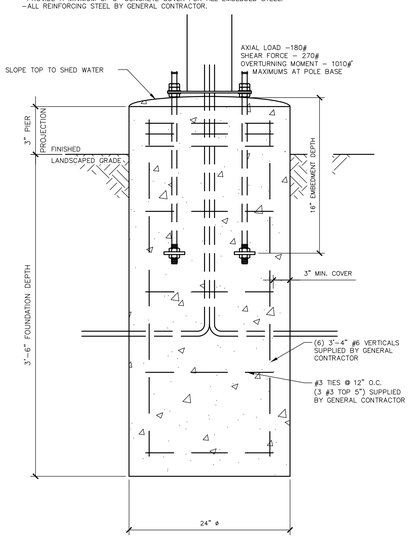

1 C2.4 DIRECTIONAL SIGN W/ ARCH
100 MPH
NTS

NOTES:
-TOP OF PIERS SHALL BE SLOPED SUCH THAT MOISTURE CANNOT ACCUMULATE
-USE F1554 GRADE 36 BOLTS MINIMUM
-USE HOT DIPPED GALVANIZED BOLTS
-ANCHOR BOLTS TO BE SET IN ACCORDANCE WITH AISC CODE OF STANDARD PRACTICE
-ANCHOR RODS, NUTS, AND WASHERS SHALL BE SHIPPED AS AN ASSEMBLY FROM THE SIGN/LIGHTING MANUFACTURER
-DO NOT CUT ANCHOR BOLTS AFTER INSTALLATION OF POLE

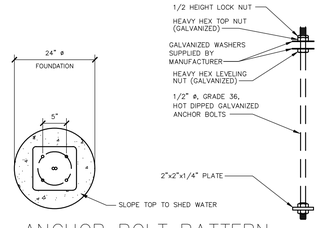

A ANCHOR BOLT PATTERN
NTS

NOTES:
-TOP OF PIERS SHALL BE SLOPED SUCH THAT MOISTURE CANNOT ACCUMULATE.
-ANCHOR RODS, NUTS, AND WASHERS SHALL BE SHIPPED AS AN ASSEMBLY FROM THE SIGN/LIGHTING MANUFACTURER
-DO NOT CUT ANCHOR BOLTS AFTER INSTALLATION OF POLE
-INSTALL DIRECTIONAL SIGN FOOTING 3' FROM THE BACK OF CURB TO THE CENTER OF FOOTING UNLESS NOTED OTHERWISE ON PLAN.

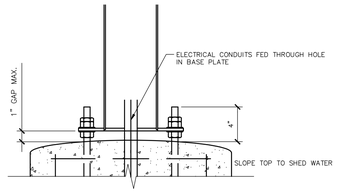

B CONNECTION DETAILS
NTS

GEN. NOTES

-THE FOLLOWING CODES WERE USED IN DESIGN:
-IBC 2009
-ASCE 7-05
-ACI 318-08
-AISC 13th EDITION
-AWS D1.1
-WIND SPEED (100 MPH 3-SEC GUST)
-EXPOSURE C
-DESIGN LOADS DERIVED FROM THESE CODES AND FORCES
-AXIAL - 180#
-SHEAR - 270#
-MOMENT - 1010#'

-ALL FOOTING EXCAVATIONS ARE TO BE CLEAR OF WATER AND FOREIGN MATTER BEFORE PLACING CONCRETE
-MINIMUM ALLOWABLE LATERAL SOIL BEARING PRESSURE OF 100PSF/FT (x2)
-SITE SOIL CONDITIONS TO BE CONFIRMED BY GEOTECHNICAL ENGINEER. IF ASSUMED SOIL CONDITIONS ARE NOT PRESENT, FOUNDATION SHALL BE DESIGNED BY A LICENSED STRUCTURAL ENGINEER TAKING INTO ACCOUNT ACTUAL SITE SOIL CONDITIONS.
-TOP 6" OF SOIL NEGLECTED IN EMBEDMENT DEPTH CALCULATIONS (EMBEDMENT DEPTHS SHOWN ARE FROM GRADE)

-ELECTRICAL CONTRACTOR TO PROVIDE INFORMATION ON CONDUIT AND ELECTRICAL REQUIREMENTS.

CONCRETE:

-ALL FOOTINGS SHALL BEAR ON FIRM UNDISTURBED RESIDUAL SOIL AND/OR ENGINEERED EARTH FILL COMPACTED TO 98% OF ITS MAXIMUM DRY DENSITY AS PER ASTM D 698-70 (STANDARD PROCTOR) UNLESS NOTED OTHERWISE.
-ALL PIERS TO EXTEND TO FROST DEPTH AS DETERMINED BY LOCAL JURISDICTION.
-TOP OF PIERS SHALL BE SLOPED SUCH THAT MOISTURE CANNOT ACCUMULATE.
-MINIMUM CONCRETE STRENGTH (f'c) SHOULD CONFORM WITH MCDONALDS CAST-IN-PLACE CONCRETE SPECIFICATIONS SECTION 2.13-A
-USE OF ADMIXTURES SHALL CONFORM TO MCDONALDS CAST-IN-PLACE CONCRETE SPECIFICATION SECTION 2.6
-AIR ENTRAINMENT SHALL CONFORM WITH MCDONALDS CAST-IN-PLACE CONCRETE SPECIFICATION SECTIONS 2.6-A & 2.13-A
-WATER CONTENT RATIO SHALL CONFORM TO MCDONALDS CAST-IN-PLACE CONCRETE SPECIFICATIONS SECTION 2.13-A
-FOUNDATION CONCRETE TO BE TESTED PER MCDONALDS CAST-IN-PLACE CONCRETE SPECIFICATIONS SECTION 3.14
-PROVIDE A MINIMUM 3" OF CONCRETE COVER OVER ALL EMBEDDED STEEL.
-REINFORCEMENT PLACEMENT SHALL CONFORM TO MCDONALDS CAST-IN-PLACE CONCRETE SPECIFICATIONS SECTIONS 3.2 & 3.5. PERFORMED BY GENERAL CONTRACTOR.
-ANCHOR BOLTS TO BE SET IN ACCORDANCE WITH AISC CODE OF STANDARD PRACTICE
-DO NOT PLACE POLES ON CONCRETE UNTIL CONCRETE HAS CURED PER MCDONALDS CAST-IN-PLACE CONCRETE SPECIFICATION, SECTION 3.11-E.

STEEL:

-STEEL PIPE SECTION: ASTM A53 OR A252 TYPE E GRADE B (Fy = 35ksi)
-HSS ROUND SECTION: ASTM A500 GRADE B (Fy = 42ksi)
-HSS SQUARE/RECTANGULAR SECTIONS: ASTM A500 GRADE B (Fy = 46ksi)
-CONNECTION BOLTS A325
-STEEL ANGLES, CHANNELS, STRUCTURAL SHAPES AND PLATES: ASTM A36
-REINFORCEMENT: GRADE 60 - BY GENERAL CONTRACTOR
-NUTS: A563DH OR A194-2H
-WASHERS: ASTM F-436
-USE HOT DIPPED GALVANIZED BOLTS AND FASTENERS
-ANCHOR RODS, NUTS, AND WASHERS SHALL BE SHIPPED AS AN ASSEMBLY FROM THE SIGN/LIGHTING MANUFACTURER
-NO FIELD HEATING TO BEND STEEL SHALL BE ALLOWED WITHOUT ENGINEER'S APPROVAL.
-DO NOT CUT ANCHOR BOLTS AFTER INSTALLATION OF POLE
-AFTER INSTALLATION, ALL EXPOSED STEEL SHALL BE PAINTED WITH AN ENAMEL PAINT TO INHIBIT CORROSION.
-ANY FIELD WELDING SHALL FIRST BE VERIFIED BY ENGINEER AND PERFORMED IN ACCORDANCE WITH AWS D1.1.

-REFER TO SIGN MANUFACTURER DRAWINGS AND INSTRUCTIONS FOR ADDITIONAL INFORMATION.
-CONTRACTOR (INSTALLER) IS RESPONSIBLE FOR THE MEANS AND METHODS OF CONSTRUCTION IN REGARDS TO JOBSITE SAFETY.
-DETAILS AND STRUCTURAL MEMBERS NOT SHOWN DESIGNED BY OTHERS
-ANY MODIFICATIONS ARE TO BE VERIFIED BY AN ENGINEER

ACCRUENT UPLOAD DATE: 11/2/2012

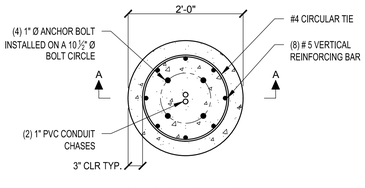

POLE BASE - PLAN VIEW
NOT TO SCALE

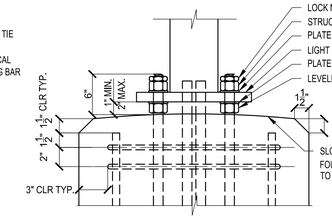

LIGHT POLE BASE ON TOP OF FOUNDATION
NOT TO SCALE

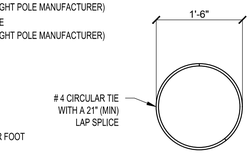

CIRCULAR TIE DETAIL
NOT TO SCALE

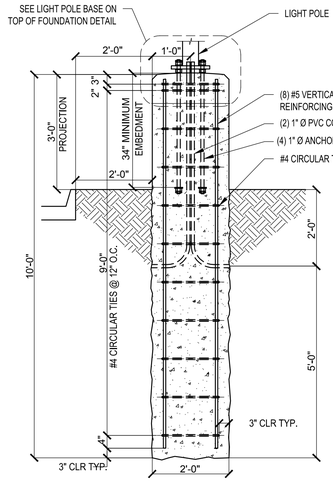

VIEW A-A
NOT TO SCALE

3 C2.4 LIGHT POLE FOUNDATION DETAILS
NTS

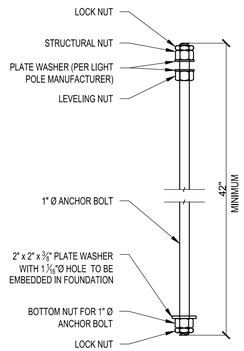

ANHCOR BOLT DETAIL
NOT TO SCALE

DESIGN CRITERIA:
AASHTO "STANDARD SPECIFICATIONS FOR STRUCTURAL SUPPORTS FOR HIGHWAY SIGNS, LUMINAIRES AND TRAFFIC SIGNALS, FIFTH EDITION, 2009

FOUNDATION DESIGN PARAMETERS:
1. MAXIMUM LIGHT POLE BASE REACTIONS:
   - BASE MOMENT = 16,845 lbs-ft
   - BASE SHEAR = 978 lbs
2. MAXIMUM WIND SPEED (3 SECOND GUST) = 120MPH
3. MINIMUM REQUIRED SOIL PARAMETERS:
   - COHESIVE SOILS:
     - SHEAR STRENGTH = 750 lbs/ft²
     - 6" MAXIMUM DEPTH OF DISTURBED SOIL OR TOP SOIL
   - COHESIONLESS SOILS:
     - ANGLE OF INTERNAL FRICTION = 27 DEGREES
     - WATER TABLE SHALL BE LOCATED BELOW THE BOTTOM OF THE FOUNDATION
     - 6" MAXIMUM DEPTH OF DISTURBED SOIL OR TOP SOIL
4. THE SOILS REPORT SHALL BE REVIEWED BY THE ENGINEER OF RECORD TO CONFIRM THAT THE MINIMUM SOIL PARAMETERS ARE MET OR EXCEEDED BEFORE THIS DESIGN IS USED. IF THE MINIMUM SOIL PARAMETERS ARE NOT MET, THIS DESIGN SHALL NOT BE USED.
5. THE ENGINEER OF RECORD SHALL REVIEW THE MAXIMUM BASE REACTIONS AND DESIGN WIND SPEED FOR THE LIGHT POLE TO BE INSTALLED TO DETERMINE IF THE FOUNDATION'S MAXIMUM DESIGN LOADS HAVE NOT BEEN EXCEEDED. THIS FOUNDATION DESIGN SHALL NOT BE USED IF THE MAXIMUM DESIGN LOADS OR WIND SPEED HAVE BEEN EXCEEDED.
6. THIS FOUNDATION DESIGN SHALL NOT BE USED IN LOCATIONS WHICH ARE CLOSER THAN 8ft FROM A RETAINING WALL.
7. THIS FOUNDATION DESIGN SHALL NOT BE USED AT LOCATIONS WHERE THE GROUND SLOPE EXCEEDS 4 inches per foot.

GENERAL NOTES:
1. CONCRETE COMPRESSIVE STRENGTH (f'c) SHALL BE A MINIMUM OF 3000psi
2. ANCHOR BOLTS SHALL BE ASTM F1554 GRADE 55, HOT DIP GALVANIZED PER ASTM F2329
3. REINFORCING STEEL SHALL BE ASTM A615 GRADE 60
4. NUTS SHALL BE HEAVY HEX ASTM A563 GRADE DH, HOT DIP GALVANIZED PER ASTM A153
5. PLATE SHALL BE ASTM A572 GRADE 50, HOT DIP GALVANIZED PER ASTM A153
6. LOCK NUT SHALL BE HOT DIP GALVANIZED PER ASTM A153

ACCRUENT UPLOAD DATE: 11/2/2012

NOTE:
-DESIGN CODES
IBC 2009
ASCE 7-05
ACI 318-08
AISC 13th EDITION
AWS D1.1
-WIND SPEED (100 MPH 3-SEC GUST)
-EXPOSURE C
-DESIGN LOADS DERIVED FROM THESE CODES AND FORCES
-AXIAL - 130#
-SHEAR - 215#
-MOMENT - 600#'
-USE CONCRETE WITH A 3000PSI MINIMUM COMPRESSIVE STRENGTH (f'c).
-PIER DEPTHS REQUIRED ARE MINIMUMS. ALL PIERS TO EXTEND TO FROST DEPTH AS DETERMINED BY LOCAL JURISDICTION.
-TOP OF PIERS SHALL BE SLOPED SUCH THAT MOISTURE CANNOT ACCUMULATE.
-ELECTRICAL CONTRACTOR TO PROVIDE INFORMATION ON CONDUIT AND ELECTRICAL REQUIREMENTS.
-MINIMUM ALLOWABLE LATERAL SOIL BEARING PRESSURE 100 PSF/FT OF DEPTH (x2)
-TOP 6" OF SOIL NEGLECTED IN EMBEDMENT DEPTH CALCULATIONS (EMBEDMENT DEPTHS SHOWN ARE FROM GRADE).
-PROVIDE A MINIMUM OF 3" CONCRETE COVER FOR ALL EMBEDDED STEEL.
-ALL REINFORCING STEEL BY GENERAL CONTRACTOR.

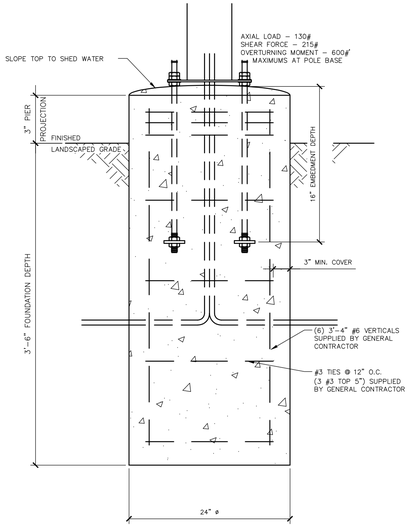

2 C2.4 DIRECTIONAL SIGN W/O ARCH
100 MPH
NTS

NOTES:
-TOP OF PIERS SHALL BE SLOPED SUCH THAT MOISTURE CANNOT ACCUMULATE
-USE F1554 GRADE 36 BOLTS MINIMUM
-USE HOT DIPPED GALVANIZED BOLTS
-ANCHOR BOLTS TO BE SET IN ACCORDANCE WITH AISC CODE OF STANDARD PRACTICE
-ANCHOR RODS, NUTS, AND WASHERS SHALL BE SHIPPED AS AN ASSEMBLY FROM THE SIGN/LIGHTING MANUFACTURER
-DO NOT CUT ANCHOR BOLTS AFTER INSTALLATION OF POLE

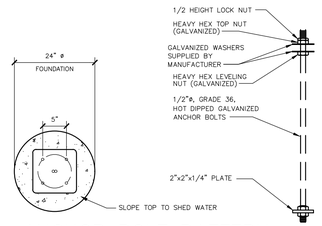

A ANCHOR BOLT PATTERN
NTS

NOTES:
-TOP OF PIERS SHALL BE SLOPED SUCH THAT MOISTURE CANNOT ACCUMULATE.
-ANCHOR RODS, NUTS, AND WASHERS SHALL BE SHIPPED AS AN ASSEMBLY FROM THE SIGN/LIGHTING MANUFACTURER
-DO NOT CUT ANCHOR BOLTS AFTER INSTALLATION OF POLE
-INSTALL DIRECTIONAL SIGN FOOTING 3' FROM THE BACK OF CURB TO THE CENTER OF FOOTING UNLESS NOTED OTHERWISE ON PLAN.

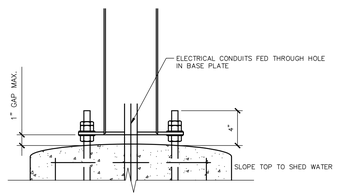

B CONNECTION DETAILS
NTS

GEN. NOTES

-THE FOLLOWING CODES WERE USED IN DESIGN:
-IBC 2009
-ASCE 7-05
-ACI 318-08
-AISC 13th EDITION
-AWS D1.1
-WIND SPEED (100 MPH 3-SEC GUST)
-EXPOSURE C
-DESIGN LOADS DERIVED FROM THESE CODES AND FORCES
-AXIAL - 130#
-SHEAR - 215#
-MOMENT - 600#'

-ALL FOOTING EXCAVATIONS ARE TO BE CLEAR OF WATER AND FOREIGN MATTER BEFORE PLACING CONCRETE
-MINIMUM ALLOWABLE LATERAL SOIL BEARING PRESSURE OF 100PSF/FT (x2)
-SITE SOIL CONDITIONS TO BE CONFIRMED BY GEOTECHNICAL ENGINEER. IF ASSUMED SOIL CONDITIONS ARE NOT PRESENT, FOUNDATION SHALL BE DESIGNED BY A LICENSED STRUCTURAL ENGINEER TAKING INTO ACCOUNT ACTUAL SITE SOIL CONDITIONS.
-TOP 6" OF SOIL NEGLECTED IN EMBEDMENT DEPTH CALCULATIONS (EMBEDMENT DEPTHS SHOWN ARE FROM GRADE)

-ELECTRICAL CONTRACTOR TO PROVIDE INFORMATION ON CONDUIT AND ELECTRICAL REQUIREMENTS.

CONCRETE:

-ALL FOOTINGS SHALL BEAR ON FIRM UNDISTURBED RESIDUAL SOIL AND/OR ENGINEERED EARTH FILL COMPACTED TO 98% OF ITS MAXIMUM DRY DENSITY AS PER ASTM D 698-70 (STANDARD PROCTOR) UNLESS NOTED OTHERWISE.
-ALL PIERS TO EXTEND TO FROST DEPTH AS DETERMINED BY LOCAL JURISDICTION.
-TOP OF PIERS SHALL BE SLOPED SUCH THAT MOISTURE CANNOT ACCUMULATE.
-MINIMUM CONCRETE STRENGTH (f'c) SHOULD CONFORM WITH MCDONALDS CAST-IN-PLACE CONCRETE SPECIFICATIONS SECTION 2.13-A
-USE OF ADMIXTURES SHALL CONFORM TO MCDONALDS CAST-IN-PLACE CONCRETE SPECIFICATION SECTION 2.6
-AIR ENTRAINMENT SHALL CONFORM WITH MCDONALDS CAST-IN-PLACE CONCRETE SPECIFICATION SECTIONS 2.6-A & 2.13-A
-WATER CONTENT RATIO SHALL CONFORM TO MCDONALDS CAST-IN-PLACE CONCRETE SPECIFICATIONS SECTION 2.13-A
-FOUNDATION CONCRETE TO BE TESTED PER MCDONALDS CAST-IN-PLACE CONCRETE SPECIFICATIONS SECTION 3.14
-PROVIDE A MINIMUM 3" OF CONCRETE COVER OVER ALL EMBEDDED STEEL.
-REINFORCEMENT PLACEMENT SHALL CONFORM TO MCDONALDS CAST-IN-PLACE CONCRETE SPECIFICATIONS SECTIONS 3.2 & 3.5. PERFORMED BY GENERAL CONTRACTOR.
-ANCHOR BOLTS TO BE SET IN ACCORDANCE WITH AISC CODE OF STANDARD PRACTICE
-DO NOT PLACE POLES ON CONCRETE UNTIL CONCRETE HAS CURED PER MCDONALDS CAST-IN-PLACE CONCRETE SPECIFICATION, SECTION 3.11-E.

STEEL:

-STEEL PIPE SECTION: ASTM A53 OR A252 TYPE E GRADE B (Fy = 35ksi)
-HSS ROUND SECTION: ASTM A500 GRADE B (Fy = 42ksi)
-HSS SQUARE/RECTANGULAR SECTIONS: ASTM A500 GRADE B (Fy = 46ksi)
-CONNECTION BOLTS A325
-STEEL ANGLES, CHANNELS, STRUCTURAL SHAPES AND PLATES: ASTM A36
-REINFORCEMENT: GRADE 60 - BY GENERAL CONTRACTOR
-NUTS: A563DH OR A194-2H
-WASHERS: ASTM F-436
-USE HOT DIPPED GALVANIZED BOLTS AND FASTENERS
-ANCHOR RODS, NUTS, AND WASHERS SHALL BE SHIPPED AS AN ASSEMBLY FROM THE SIGN/LIGHTING MANUFACTURER
-NO FIELD HEATING TO BEND STEEL SHALL BE ALLOWED WITHOUT ENGINEER'S APPROVAL.
-DO NOT CUT ANCHOR BOLTS AFTER INSTALLATION OF POLE
-AFTER INSTALLATION, ALL EXPOSED STEEL SHALL BE PAINTED WITH AN ENAMEL PAINT TO INHIBIT CORROSION.
-ANY FIELD WELDING SHALL FIRST BE VERIFIED BY ENGINEER AND PERFORMED IN ACCORDANCE WITH AWS D1.1.

-REFER TO SIGN MANUFACTURER DRAWINGS AND INSTRUCTIONS FOR ADDITIONAL INFORMATION.
-CONTRACTOR (INSTALLER) IS RESPONSIBLE FOR THE MEANS AND METHODS OF CONSTRUCTION IN REGARDS TO JOBSITE SAFETY.
-DETAILS AND STRUCTURAL MEMBERS NOT SHOWN DESIGNED BY OTHERS
-ANY MODIFICATIONS ARE TO BE VERIFIED BY AN ENGINEER

ACCRUENT UPLOAD DATE: 11/2/2012

REV.	DATE	DESCRIPTION	BY
1	2/16/17	1ST CITY SUBMITTAL	JEJ

PREPARED BY:
Bishop Engineering
"Planning Your Successful Development"
3501 104th Street
Des Moines, Iowa 50322-3825
Phone: (515)276-0467 Fax: (515)276-0217
Civil Engineering & Land Surveying Established 1959

PREPARED FOR:
McDonald's USA, LLC
© 2017 McDonald's USA, LLC
These drawings and specifications are the confidential and proprietary property of McDonald's USA, LLC and shall not be copied or reproduced without written authorization. The contract documents were prepared for use on this specific site in conjunction with its issue date and are not suitable for use on other projects or at other locations. Reuse of these drawings for reference or example on another project requires the services of properly licensed architects and engineers. Reproduction of the contract documents for reuse on another project is not authorized.

DRAWN BY: JMR
STD ISSUE DATE: 2/10/2017
REVIEWED BY: JEJ
DATE ISSUED: 2/10/2017

TITLE: LA CROSSE, WI
SITE PLAN
DESCRIPTION: DRIVE-THRU DETAILS
SITE ID: 480054
SITE ADDRESS: 1140 W GEORGE ST, LA CROSSE, WI 54601

SHEET NO. C2.5
BE # 120207

2/16/2017 4:53:51 PM M:\LAND PROJECTS 2012\2020? LA CROSSE, WI - GEORGE ST\DWG\C2 LAYOUT.DWG

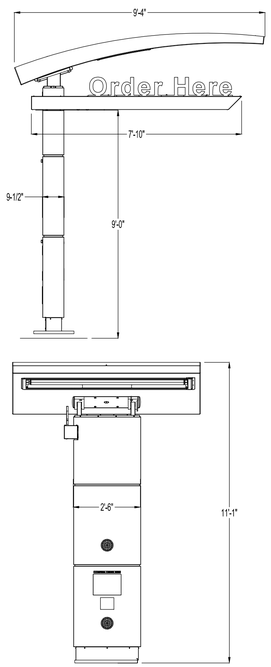

1 C2.5 COD SCHEMATIC DETAIL

NOT TO SCALE

NOTE: THIS DRAWING IS SHOWN FOR SCHEMATIC PURPOSES ONLY. SEE MANUFACTURER FOR INSTALLATION INSTRUCTIONS

CONTRACTOR SHALL INSTALL ADDITIONAL ADA SIGNAGE (SUCH AS FINE AMOUNT) AS REQUIRED PER LOCAL ORDINANCE

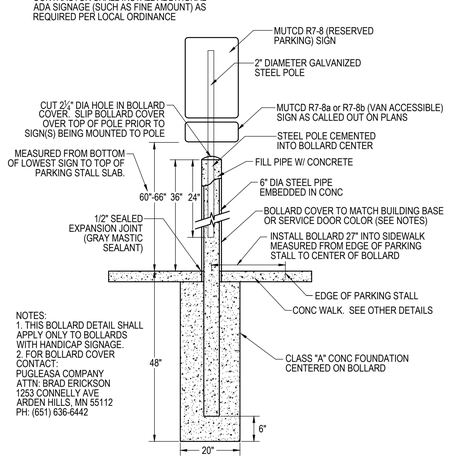

NOTES:
1. THIS BOLLARD DETAIL SHALL APPLY ONLY TO BOLLARDS WITH HANDICAP SIGNAGE.
2. FOR BOLLARD COVER CONTACT:
PUGLEASA COMPANY
ATTN: BRAD ERICKSON
1253 CONNELLY AVE
ARDEN HILLS, MN 55112
PH: (651) 636-6442

2 C2.5 HANDICAP PARKING SIGN & BOLLARD DETAIL

NOT TO SCALE

NOTES:
1. THIS BOLLARD DETAIL SHALL APPLY ONLY TO BOLLARDS WITH PULL FORWARD SIGNAGE.
2. FOR BOLLARD COVER CONTACT:
PUGLEASA COMPANY
ATTN: BRAD ERICKSON
1253 CONNELLY AVE
ARDEN HILLS, MN 55112
PH: (651) 636-6442

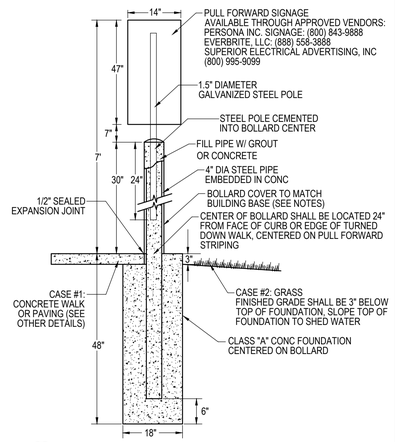

3 C2.5 PULL FORWARD SIGN & BOLLARD DETAIL

NOT TO SCALE

NOTES:
1. THIS BOLLARD DETAIL SHALL APPLY TO BOLLARD AT REAR CORNER OF BUILDING ADJACENT TO DRIVE-THRU AND EXTERIOR TRASH ENCLOSURE BOLLARDS.
2. FOR BOLLARD COVER CONTACT:
PUGLEASA COMPANY
ATTN: BRAD ERICKSON
1253 CONNELLY AVE
ARDEN HILLS, MN 55112
PH: (651) 636-6442

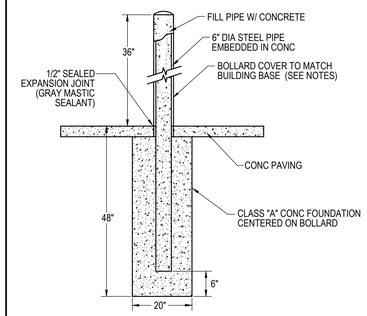

4 C2.5 BOLLARD DETAIL

NOT TO SCALE

KEY NOTES:

(A) 2#12 & 1#12 GND., 3/4" CONDUIT TO LP-1 FOR COD CANOPY LIGHTING

(B) 4#12 & 1#12 GND., 3/4" CONDUIT TO LP-1 FOR PRIMARY OPO MENUBOARD LIGHTING AND PLC.

(C) 2#12 & 1#12 GND & 1#12 ISOLATED GND., 3/4" CONDUIT TO CP FOR ISOLATED GROUND POWER TO COD'S. EACH COD SHALL BE ON ITS OWN DEDICATED CIRCUIT.

(D) 2#12 & 1#12 GND, 3/4" CONDUIT TO LP-1 FOR SECONDARY OPO MENUBOARD AND PRESELL BOARD LIGHTING.

(E) (2) 1-1/2" CONDUIT
ONE FOR COD CABLING
ONE FOR LOOP DETECTOR

(F) 1" CONDUIT - FOR LOW VOLTAGE/ OPO CONTROLLER

(G) 1-1/2" CONDUIT - FOR LOW VOLTAGE/ OPO CONTROLLER

GENERAL NOTES:
1. VERIFY EXACT CIRCUITS AND QUANTITIES OF CIRCUITS WITH PANEL SCHEDULES ON DRAWING E4.2 AND MANUFACTURER'S INSTALLATION INSTRUCTIONS.
2. PER MANUFACTURER'S INSTALLATION INSTRUCTIONS SEPERATE DEDICATED NEUTRALS ARE REQUIRED TO MENUBOARD AND PRESELL BOARD FOR EACH CIRCUIT (PLC AND LIGHTING).
3. IF ANY BENDS ARE REQUIRED, SWEEPS MUST BE PROVIDED IN CONDUITS.

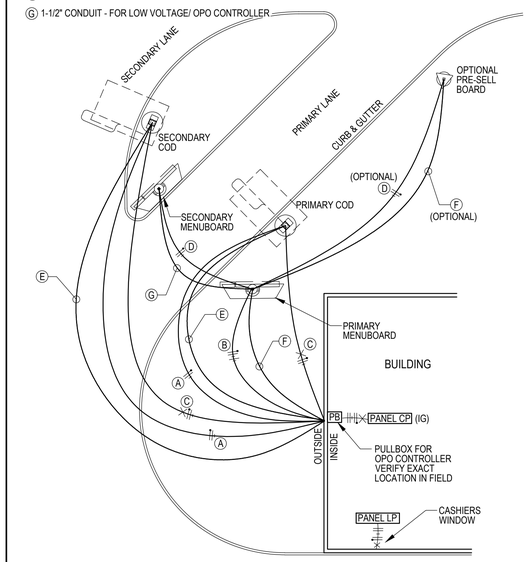

5 C2.5 DRIVE-THRU WIRING DETAIL

NOT TO SCALE

SKETCH CREATED FROM ELECTRICAL OPO UPDATE (E-OPO) DATED SEPT. 2012
-MODIFIED PER REGIONAL INPUT AUG, 2014.

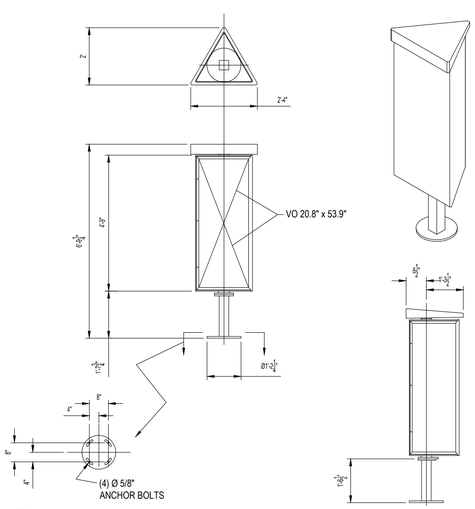

6 C2.5 OPO-1 PRE-SELL BOARD SCHEMATIC DETAIL

NOT TO SCALE

NOTE: THIS DRAWING IS SHOWN FOR SCHEMATIC PURPOSES ONLY. SEE MANUFACTURER FOR INSTALLATION INSTRUCTIONS

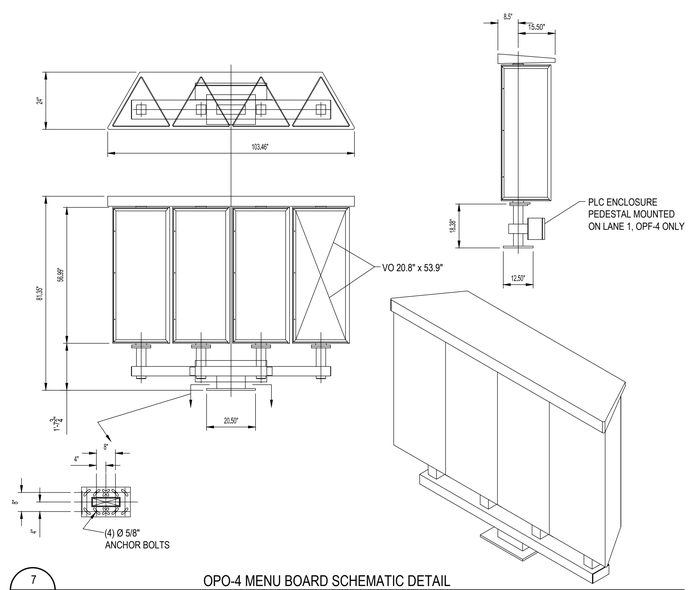

7 C2.5 OPO-4 MENU BOARD SCHEMATIC DETAIL

NOT TO SCALE

NOTE: THIS DRAWING IS SHOWN FOR SCHEMATIC PURPOSES ONLY. SEE MANUFACTURER FOR INSTALLATION INSTRUCTIONS

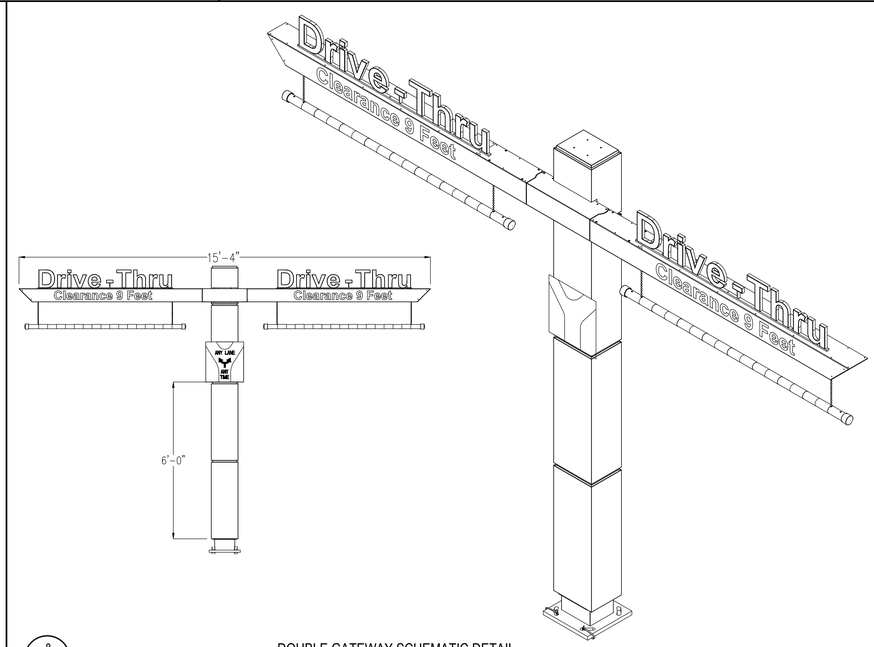

8 C2.5 DOUBLE GATEWAY SCHEMATIC DETAIL

NOT TO SCALE

NOTE: THIS DRAWING IS SHOWN FOR SCHEMATIC PURPOSES ONLY. SEE MANUFACTURER FOR INSTALLATION INSTRUCTIONS

REV	DATE	DESCRIPTION	BY
1	2/16/17	1ST CITY SUBMITTAL	JEJ

PREPARED BY:

Bishop Engineering
"Planning Your Successful Development"
3501 104th Street
Des Moines, Iowa 50322-3825
Phone: (515)276-4467 Fax: (515)276-0217
Civil Engineering & Land Surveying Established 1959

PREPARED FOR:

McDonald's USA, LLC

© 2017 McDonald's USA, LLC

These drawings and specifications are the confidential and proprietary property of McDonald's USA, LLC and shall not be copied or reproduced without written authorization. The contract documents were prepared for use on this specific site in conjunction with its issue date and are valuable for only that purpose and for that limited use. Reuse of these drawings for reference or example on another project requires the services of properly licensed architects and engineers. Reproduction of the contract documents for reuse on another project is not authorized.

DRAWN BY	JMR
STD ISSUE DATE	2/10/2017
REVIEWED BY	JEJ
DATE ISSUED	2/10/2017

TITLE: LA CROSSE, WI
SITE PLAN

DESCRIPTION: DRIVE-THRU DETAILS

SITE ID: 480054

SITE ADDRESS: 1140 W GEORGE ST, LA CROSSE, WI 54601

SHEET NO. C2.6

BE # 120207

2/16/2017 4:53:54 PM M:\LAND PROJECTS 2012\120207 LA CROSSE, WI - GEORGE ST\DWG\C2 LAYOUT.DWG

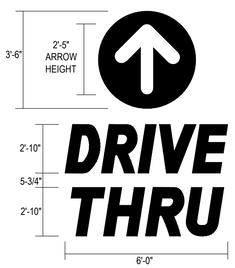

CIRCLE IS POSITIONED HORIZONTALLY, CENTERED ABOVE TYPE

ARROW IS POSITIONED VERTICALLY AND HORIZONTALLY INSIDE OF CIRCLE

ARROW ART KNOCKS OUT SO THAT ARROW IS THE COLOR OF THE PAVEMENT

LETTERS AND CIRCLE PAINT TO MATCH PANTONE PMS 123 YELLOW TYPES ALIGNS CENTERED

1 / C2.6 PAINTED 'DRIVE THRU' WITH ARROW

NOT TO SCALE

NOTE: ARROW SHALL BE PAINTED YELLOW (PMS 123)

2 / C2.6 PAINTED ARROW

NOT TO SCALE

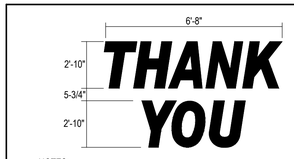

NOTES:
1. ALL TEXT SHALL BE PAINTED YELLOW (PMS 123)
2. 'THANK YOU' SHALL BE LOCATED 8" FROM THE EDGE OF THE PULL FORWARD STRIPE TO THE BOTTOM OF THE WORD 'YOU' OR AS DIMENSIONED ON PLAN.

3 / C2.6 PAINTED 'THANK YOU'

NOT TO SCALE

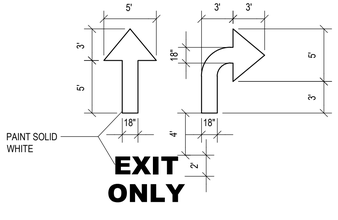

NOTE : ARROWS AND WORDS CAN BE ARRANGED IN OTHER COMBINATIONS THAN THOSE ILLUSTRATED HERE TO ACHIEVE DESIRED RESULT.

4 / C2.6 TYPICAL PAVEMENT MARKING

NOT TO SCALE

STRIPING NOTES:

- (A) 6" WIDE PAINTED STRIPE. PMS 123, YELLOW.
- (B) 1'-0" WIDE PAINTED DIRECTIONAL ARROW. PMS 123 YELLOW. SEE GENERAL NOTE 4.
- (C) 6" WIDE PAINTED MERGE POINT. PMS 123 YELLOW. SEE GENERAL NOTE 4.
- (D) PAINTED DRIVE THRU GRAPHIC. SEE DETAIL 1. SEE GENERAL NOTE 4.
- (E) PAINTED DRIVE THRU GRAPHIC. SEE DETAIL 2. SEE GENERAL NOTE 4.
- (F) PAINTED DRIVE THRU GRAPHIC. SEE DETAIL 3. SEE GENERAL NOTE 4.
- (G) 8" WIDE, 10' LONG PAINTED PULL FORWARD STRIPE. PMS 123 YELLOW.
- (H) PAINTED SITE CIRCULATION ARROW. SEE DETAIL 4. SEE GENERAL NOTE 4.
- (I) 4" WIDE CUSTOMER PARKING STRIPING. WHITE.
- (J) PAINTED ISLAND, TYP. WHITE.
- (K) PAINTED HANDICAP SYMBOL, TYP. WHITE.
- (L) 6" WIDE PAINTED CROSSWALK STRIPING. WHITE

GENERAL NOTES:

1. FIELD VERIFY AND CONFIRM EXISTING CONDITIONS AND DIMENSIONS PRIOR TO COMMENCING CONSTRUCTION. NOTIFY MCDONALD'S PROJECT MANAGER OF ANY DISCREPANCIES PRIOR TO COMMENCING CONSTRUCTION.
2. SEE SHEET C2.1 FOR ALL RADIUS DIMENSIONS.
3. SEE SHEET C2.2 FOR COD CONSTRUCTION.
4. ALL PAVEMENT STENCILS MUST BE PURCHASED FROM THE FOLLOWING AUTHORIZED PROVIDER.
   PAVEMENT STENCIL COMPANY
   P.O. BOX 18034
   ROANOKE, VA. 24014
   PH 800-250-5547 FAX 540-427-1326
   PAVEMENTSTENCIL.NET

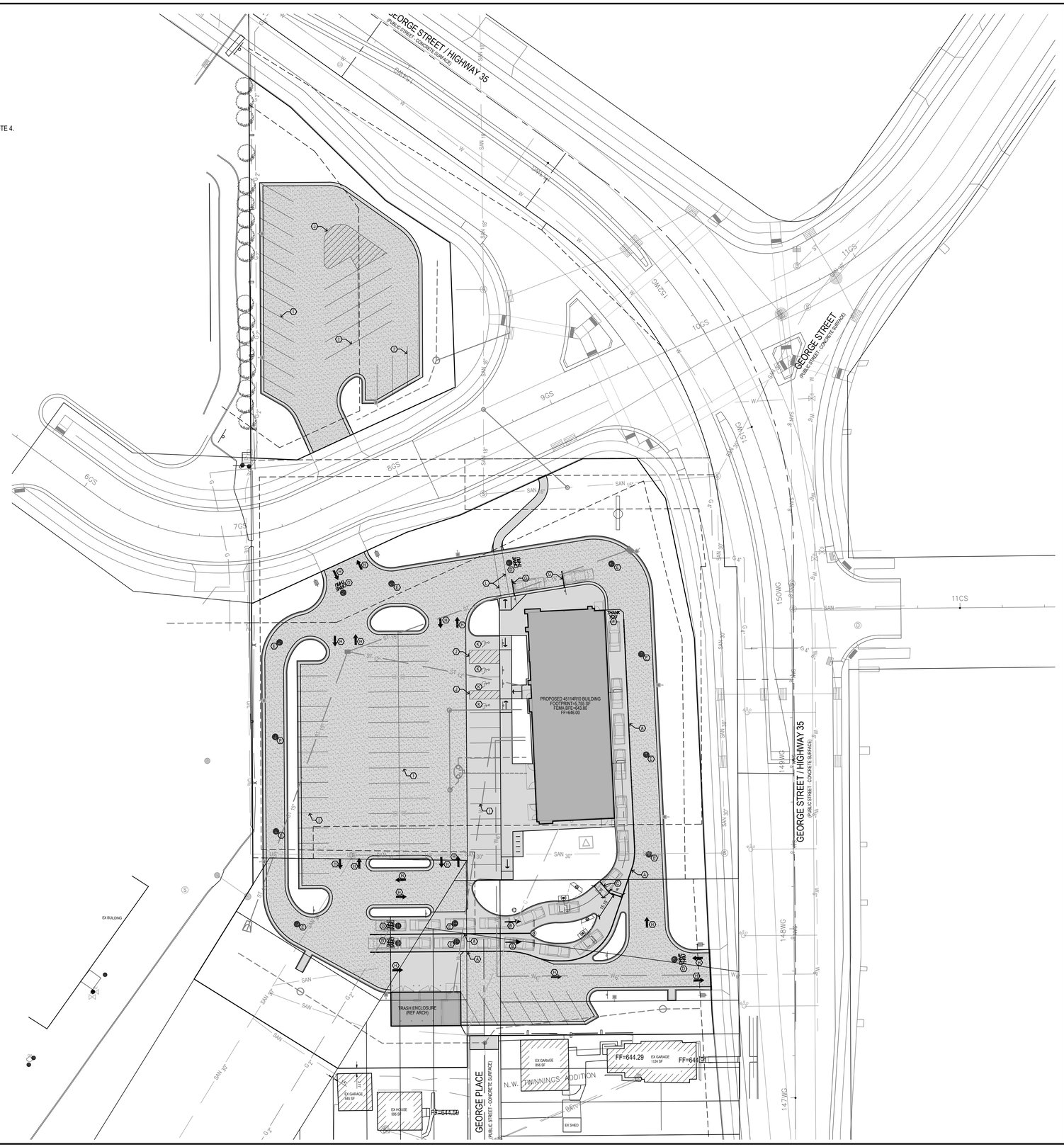

REV	DATE	DESCRIPTION	BY
1	2/16/17	1ST CITY SUBMITTAL	JEJ

PREPARED BY:

Bishop Engineering
"Planning Your Successful Development"
3501 104th Street
Des Moines, Iowa 50322-3825
Phone: (515)276-1467 Fax: (515)276-0217
Civil Engineering & Land Surveying Established 1959

PREPARED FOR:

McDonald's USA, LLC

© 2017 McDonald's USA, LLC

These drawings and specifications are the confidential and proprietary property of McDonald's USA, LLC, and shall not be copied or reproduced without written authorization. The contract documents were prepared for use on this specific site in conjunction with its issue date and no other purpose. Re-use of these drawings for other sites or alterations to these drawings for reference or example on another project requires the services of properly licensed architects and engineers. Reproduction of the contract documents for reuse on another project is not authorized.

DRAWN BY	JMR
STD ISSUE DATE	2/10/2017
REVIEWED BY	JEJ
DATE ISSUED	2/10/2017

TITLE: LA CROSSE, WI SITE PLAN

DESCRIPTION: STRIPING PLAN

SITE ID: 480054

SITE ADDRESS: 1140 W GEORGE ST, LA CROSSE, WI 54601

SHEET NO. C2.7

BE # 120207

2/16/2017 5:08:54 PM M:\LAND PROJECTS 2012\120207 LA CROSSE, WI - GEORGE ST\DWG\C2 LAYOUT.DWG