City of La Crosse, Wisconsin

City Hall
400 La Crosse Street
La Crosse, WI 54601

Meeting Agenda - Final

Board of Public Works

Tuesday, September 2, 2025 | **10:00 AM** | **Council Chambers**
City Hall, First Floor

The Board of Public Works meeting is open for in-person attendance and will also be conducted through video conferencing. The meeting can be viewed by visiting the Legislative Information Center (https://cityoflacrosse.legistar.com/Calendar.aspx) and clicking on the video link to the far right in the meeting list.)

Call to Order

Roll Call

Shaundel Washington-Spivey, Tamra Dickinson, Erin Goggin, Matt Gallager, Andrea Trane.

Approval of Minutes

Minutes from August 25, 2025.

Agenda Items:

25-0112 Bidder's Proof of Responsibility.

25-1034 Request from 360 Real Estate to excavate 900 block Ferry St, 900 block Division St, and 500 block 10th St S for utility work.

25-1036 Construction Contract Change Order.

25-1041 Request to declare Airport fiber internet line replacement an emergency.

25-1042 Great Outdoors LLC request for Temporary Street Privilege Permit to partially close part of alley at 219 Pearl St for restoration work.

25-1043 Agreement from Wastewater Utility for Consulting Services Equipment Setup.

25-1045 Design Proposal for Xcel Direct Transfer Switch.

25-1046 Trane, U.S. Plant 4 Industrial Discharge Permit Renewal.

25-1047 Public right-of-way policy for Oktoberfest Parades.

25-1048 Brightspeed of Wisconsin, LLC Street Privilege Permit request for communications in right-of-way near 1503 Ranger Dr.

25-1049	Brightspeed of Wisconsin, LLC Street Privilege Permit request for communications in right-of-way near 2402 13th Street South.
25-1051	Charter Communications Street Privilege Permit request for communications in right-of-way near 4119 Berlin Dr.
25-1052	Charter Communications Street Privilege Permit request for communications in right-of-way near W6190 Bluff Pass.

Adjournment

Notice is further given that members of other governmental bodies may be present at the above scheduled meeting to gather information about a subject over which they have decision-making responsibility.

NOTICE TO PERSONS WITH A DISABILITY
Requests from persons with a disability who need assistance to participate in this meeting should call the City Clerk's office at (608) 789-7510 or send an email to ADAcityclerk@cityoflacrosse.org, with as much advance notice as possible.

City of La Crosse, Wisconsin

City Hall
400 La Crosse Street
La Crosse, WI 54601

Text File

File Number: 25-0112

Agenda Date: 9/2/2025 **Version:** 1 **Status:** Agenda Ready

In Control: Board of Public Works **File Type:** General Item

Agenda Number:

BIDDERS PROOF OF RESPONSIBILITY FOR BPW MEETING			
09/02/2025			
CONTRACTOR	ADDRESS	2025-2026 BID	WORK PERFORMED
		PRE-QUALIFICATION	
H.J. MARTIN & SON, INC.	320 S Military Ave, Green Bay, WI 54303	$96,623,906.00	Flooring
SPOHN RANCH, INC.	6824 S Centinela Ave, Los Angeles, CA 90230	$21,507,585.00	Skatepark design & construction, pump truck, BMX & wheel park design & construction, concrete paving, site grading

City of La Crosse, Wisconsin

City Hall
400 La Crosse Street
La Crosse, WI 54601

Text File

File Number: 25-1034

Agenda Date: 9/2/2025 **Version:** 1 **Status:** Agenda Ready

In Control: Board of Public Works **File Type:** General Item

Agenda Number:

City of La Crosse, Wisconsin

City Hall
400 La Crosse Street
La Crosse, WI 54601

Text File

File Number: 25-1036

Agenda Date: 9/2/2025 **Version:** 1 **Status:** Agenda Ready

In Control: Board of Public Works **File Type:** General Item

Agenda Number:

City of La Crosse, Wisconsin

City Hall
400 La Crosse Street
La Crosse, WI 54601

Text File

File Number: 25-1041

Agenda Date: 9/2/2025 **Version:** 1 **Status:** Agenda Ready

In Control: Board of Public Works **File Type:** Request

Agenda Number:

City of La Crosse, Wisconsin

City Hall
400 La Crosse Street
La Crosse, WI 54601

Text File

File Number: 25-1042

Agenda Date: 9/2/2025 **Version:** 1 **Status:** Agenda Ready

In Control: Board of Public Works **File Type:** General Item

Agenda Number:

TEMPORARY STREET PRIVILEGE PERMIT

Engineering Dept. ▪ Phone: (608) 789-7505 ▪ Fax: (608) 789-8184
http://www.cityoflacrosse.org engineering@cityoflacrosse.org

Permit No:	
Date:	

STATUS:	**Permit Type:**	**Parcel ID:**

Name: Great Outdoors, LLC			
Address: 3061 Edgewater Lane			
City: La Crosse	State: Wi		Zip Code: 54603
Phone: 608-633-2913	Cell: 608-633-2913	Fax:	Email:
Vehicle License Number (If Applicable):		Tag #:	

Location: 219 Pearl Street, La Crosse, WI					
Area to be occupied:	Traffic Lane(s)	Parking Lane(s) ✓	Boulevard	Sidewalk ✓	Alley ✓
Purpose for permit: Allow space for contractor to complete improvements					
Additional Conditions: Masonry restoration/pressure washing/painting					
Start Date: August 31, 2025		End Date: October 31, 2025			

Invoice #:	Fee: $ ($35.00 first 5 days, $2.00 each additional day)
Permit issued by:	
Comments:	

The undersigned understands and agrees to the following: 1) The permitted work shall comply with all permit provisions and conditions listed on and attached to this form; 2) That insurance requirements shall be met prior to approval either by submitting information with application or by keeping current information on file with the Engineering Dept.; 3) The applicant shall contact City Dispatch and the City Traffic Engineer 24 hours prior to the closure of any traffic lanes and shall provide an estimate of the duration of the closure. Temporary traffic control shall be provided and maintained by the applicant and shall comply with Part 6 of the *Manual on Uniform Traffic Control Devices (MUTCD).*

Note: Once invoiced, application fees may not be refunded. Details of permit, including dates, may be modified with approval of the Engineering Department.

Tawni M. Kind	Property Owner	8/26/2025
(PRINT) AUTHORIZED REPRESENTATIVE	TITLE	DATE
Tawni M. Kind	Property Owner	8/26/2025
(SIGN) AUTHORIZED REPRESENTATIVE	TITLE	DATE

Traffic Control Plan for 219 Pearl Street, Temporary Street Privilege Permit

*Façade work on the North, West and South sides will be performed, including but not limited to pressure washing, caulking, masonry restoration and painting. Measures will be taken to protect sidewalk and streets. Work should not extend into Pearl Street.

Work shall be done Monday – Thursday, 7:00 a.m. to 6:00 p.m. No Friday work. Because of the limited space on the north and west sides, ladders and lifts will temporarily be located in the alleyway throughout the days that we are working on those walls, although, they will not block the entire alleyway.

Contractor will be removing all supplies, hardware and signage at the end of every workday for safety and to prevent vandalism. We are requesting to block off one parking space in front of 219 Pearl Street to park the scissor lift during periods in which it is not in use during the entire time of construction, including nights and weekends. (See Green diamond in diagram) Barriers and tape will be used for safety and to prevent vandalism.

It should also be noted that only one wall will be worked on at a time to alleviate the congestion.

Property owners to the left and right of 219 Pearl have already been informed of the work to be done.

The 3 Black arrows pointing to blue lines indicate where work will be performed and where trucks/lifts may be located at any given time, depending on where they are on the project. Trucks/lifts and workers will NOT be using the entire alleyway.

Red arrows indicate location of sidewalk closed signs.

Green Diamond indicates where lift will be parked

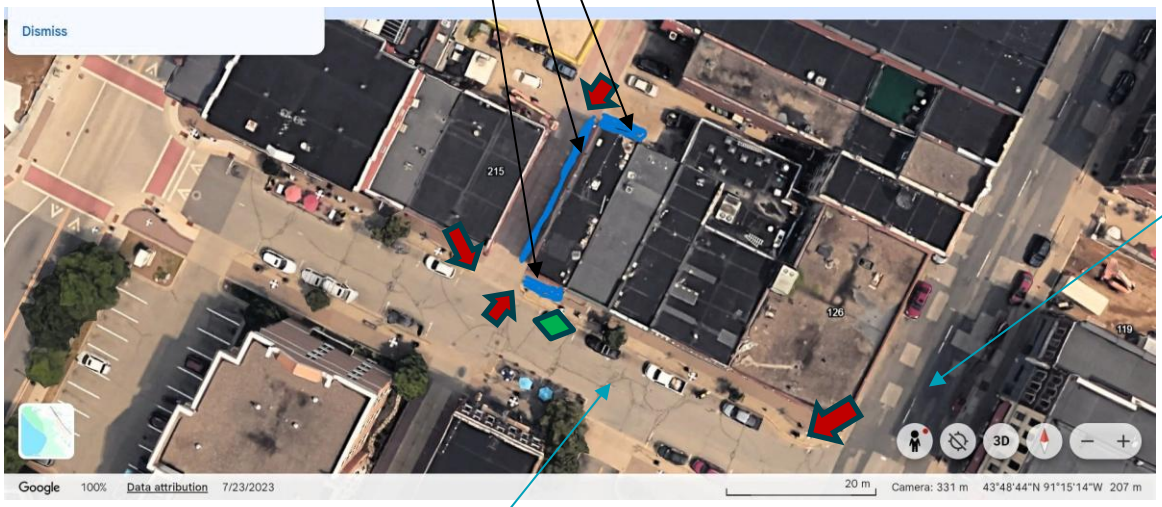

3rd Street

Pearl Street

City of La Crosse, Wisconsin

City Hall
400 La Crosse Street
La Crosse, WI 54601

Text File

File Number: 25-1043

Agenda Date: 9/2/2025 **Version:** 1 **Status:** Agenda Ready

In Control: Board of Public Works **File Type:** General Item

CITY OF LA CROSSE

Wastewater UTILITY

905 Joseph Houska Drive
La Crosse WI 54601
Phone (608) 789-7330
Fax (608) 789-3816

Jared Greeno - Wastewater
General Superintendent
608-789-7322
greenoj@cityoflacrosse.org

August 26, 2025

Subject: Wastewater Treatment Equipment Startup Consulting Service

To: BPW,

We are 1 year and 4 months past the completion deadline for the WWTP upgrade to be completed. The money allocated for project management consulting services has been used up along with funding for the project. This proposal is for continued support for Equipment Start up, and warranty issues as it relates to fine tuning issues with complex new equipment/process challenges as part of the major wastewater upgrade, service from Donohue and Assicates will help us complete a close out this major upgrade to the WWTP.

The funding source for this Service will be account 630 101141 – Restricted Cash Connection Fee Fund that can only be used for improvements at the WWTP. I ask for approval of this agreement.

Sincerely,
Jared Greeno
City of La Crosse
Wastewater Superintendent

DONOHUE

ENGINEERING SERVICES AGREEMENT

Wastewater Treatment Facility Startup Assistance (Project)

This Agreement is by and between:

City of La Crosse (Owner)
400 La Crosse Street
La Crosse, WI 54601

and

Donohue & Associates, Inc. (Donohue)
3311 Weeden Creek Road
Sheboygan, WI 53081

Who agree as follows:

Owner hereby engages Donohue to perform the Services set forth in Part I for the compensation set forth in Part III. Donohue will be authorized to commence the Services upon execution and receipt of this Agreement from Owner. Owner and Donohue agree that this signature page, together with Parts I through IV attached, constitute the entire agreement for this Project.

APPROVED FOR OWNER

By: _____

Printed Name: _____

Title: _____

Date: _____

APPROVED FOR DONOHUE

By: _____

Printed Name: _____

Title: _____

Date: _____

PART I
PROJECT DESCRIPTION/SCOPE OF SERVICES/TIMING

A. PROJECT DESCRIPTION

The purpose of this Project is to assist the Owner with close-out of the ongoing construction project and document modifications that would otherwise go unrecorded. Additional attendance at weekly progress meetings is included to continue providing management of the contractor and suppliers in an effort to mutually resolve each system's startup in a productive manner.

B. SCOPE OF SERVICES

1. Attend additional weekly and monthly progress meetings at an on-call basis while Contractor finishes the work beyond the contractual scheduled date. Meetings will end when the system is able to be reliably and consistently operated by the City's staff without significant intervention.
2. Perform on-site reviews of the punchlist and drive forward progress towards completion by the contractor, subcontractors, and suppliers. Site trips will be provided approximately bi-weekly until the punchlist is resolved.
3. Update the previously generated Standard Operating Procedures to reflect changes that best capture the current operating practices.

C. PROJECT TIMING

1. Donohue shall be authorized to commence the Services set forth herein upon execution of this Agreement. The completion of the SOPs will be provided by September 30, 2025; however, the remaining scope of services depend on the contractor's schedule, which is currently undefined.

2. Donohue's services under this Agreement will be considered complete when Donohue has delivered to Owner all the deliverables defined in under the Scope of Services.

PART II
OWNER RESPONSIBILITIES

A. In addition to other responsibilities of Owner set forth in this Agreement, Owner shall:

1. Identify a person authorized to act as the Owner's representative to respond to questions and make decisions on behalf of Owner, accept completed documents, approve payments to Donohue, and serve as liaison with Donohue as necessary for Donohue to complete its Services.

2. Furnish to Donohue copies of existing documents and data pertinent to Donohue's Scope of Services, including but not limited to and where applicable: design and record drawings for existing facilities; property descriptions, land use restrictions, surveys, geotechnical and environmental studies, or assessments.

3. Owner shall be responsible for all requirements and instructions that it furnishes to Donohue pursuant to this Agreement, and for the accuracy and completeness of all reports, data, programs, and other information furnished by Owner to Donohue pursuant to this Agreement. Donohue may use and rely upon such requirements, instructions, reports, data, programs, and information in performing or furnishing services under this Agreement, subject to any express limitations or reservations provided by Owner applicable to the furnished items.

4. Provide to Donohue existing information regarding the existence and locations of utilities and underground facilities.

5. Provide Donohue safe access to premises necessary for Donohue to provide the Services.

6. Inform Donohue whenever Owner observes or becomes aware of a Hazardous Environmental Conditions, as defined in Part IV.3. of this Agreement, that may affect Donohue's Scope of Services or time for performance.

PART III
COMPENSATION, BILLING AND PAYMENT

A. Compensation for the work as defined in the Scope of Services (Part I) of this Agreement shall be in accordance with Donohue's standard chargeout rates in effect at the time the Services are performed. Routine expenses will be billed at cost and subconsultant costs will include a 10% markup. The total cost for these Services and expenses will not exceed $24,500

B. Donohue will bill Owner monthly, with net payment due in 30 days.

C. Donohue will notify Owner if Project scope changes require modifications to the above-stated contract value. Services relative to scope changes will not be initiated without written authorization from Owner.

1. DEFINITIONS. In this section "Contracting Party" shall mean any party that is entering into this Agreement with the City of La Crosse. "La Crosse" shall mean the City of La Crosse. These definitions shall apply only to this document titled "Standard Terms and Conditions (Service Contracts)" and shall not replace, modify or supersede any definitions used in other sections of this Agreement.

2. STANDARD OF PERFORMANCE. Contracting Party agrees that the performance of the services, pursuant to the terms and conditions of this Agreement, shall be in a manner at least equal to the degree of care and skill ordinarily exercised by members of the same professions currently practicing under similar circumstances providing like services

3. FULLY QUALIFIED. Contracting Party represents that all personnel engaged in the performance of the services set forth in this Agreement shall be fully qualified and, if applicable, shall be authorized or permitted under all applicable state and local laws and any other applicable laws or regulations to perform the services.

4. SCOPE OF SERVICES. Contracting Party is required to perform, do and carryout in a timely and professional manner the services set forth in this Agreement. The Contracting Party is required to furnish all services and labor necessary as indicated in this Agreement. The scope of services to be performed shall include, those services set forth in this Agreement. La Crosse may from time to time request the Contracting Party to perform additional services which are not set forth in this Agreement. In the event that such a request is made, the performance of such services shall be subject to the terms, conditions and contingencies set forth in this Agreement.

5. CHANGE OF SCOPE. The scope of service set forth in this Agreement is based on facts known at the time of the execution of this Agreement. The scope of service may not be fully definable during initial phases, and as the project progresses, facts discovered may indicate that the scope must be redefined. If mutually agreed to in advance in writing, Contracting Party shall make changes, furnish necessary materials, and perform the work that La Crosse may require, without nullifying this Agreement, at a reasonable addition to, or reduction from, the total cost of the project. Under no circumstances shall Contracting Party make any changes, either as additions or deductions, without the written consent of La Crosse, and La Crosse shall not pay any extra charges made by Contracting Party that have not been agreed upon in advance and documented in writing.

6. COMPENSATION. Contracting Party will be compensated by La Crosse for the services provided under this Agreement and subject to the terms, conditions and contingences set forth herein. Payments to Contracting Party for services rendered under this Agreement will be based on itemized invoices submitted on a monthly basis by the Contracting Party to La Crosse. These invoices, unless lump sum, must be itemized to identify labor costs and the Contracting Party's direct expenses, including subcontractor and supplier costs. In addition, such invoices shall show the hours worked by the Contracting Party's staff and the amount of work completed as a percentage of the work to be performed. If payment is by lump sum, then only the percent complete will be invoiced. The final payment of the balance due the Contracting Party for the completed service shall be made upon completion and acceptance of the services performed by the Contracting Party under this Agreement. Without prejudice to any other right or remedy it may have, La Crosse reserves the right to setoff at any time any amount owing to it by Contracting Party against any amount payable by La Crosse to Contracting Party.

7. TAXES, SOCIAL SECURITY, INSURANCE AND GOVERNMENT REPORTING. Personal income tax payments, social security contributions, insurance and all other governmental reporting and contributions required as a consequence of the Contracting Party receiving payment under this Agreement shall be the sole responsibility of the Contracting Party.

8. TERMINATION FOR CAUSE. If, through its own fault, intentional misconduct, or the fault or intentional misconduct of its subcontractors, agents or volunteers, the Contracting Party shall fail to fulfill in a timely and proper manner its obligations under this Agreement, or if the Contracting Party shall violate any of the covenants, agreements, or stipulations of this Agreement, both as determined by La Crosse in its sole discretion, La Crosse shall thereupon have the right to terminate this Agreement by giving written notice to the Contracting Party of such termination and specifying the effective date. In such event, all finished or unfinished documents, data, studies, surveys, drawings, maps, models, photographs, reports or other deliverables performed by the Contracting Party under this Agreement for which compensation has been made shall, at the option of La Crosse, become the property of La Crosse. Notwithstanding the foregoing, the Contracting Party shall not be relieved of liability to La Crosse for damages sustained by La Crosse by virtue of the Contracting Party's intentional misconduct or negligent performance of this Agreement, and La Crosse may withhold any payments to the Contracting Party for the purpose of setoff until such time as the exact amount of damages due to La Crosse from the Contracting Party is determined. Use of incomplete or unfinished work is at the sole risk of La Crosse.

9. TERMINATION FOR CONVENIENCE. Either Party may terminate this Agreement for convenience at any time and for any reason by giving sixty (60) days written notice to the other Party of such termination. If this Agreement is terminated by La Crosse pursuant to this provision, Contracting Party will be paid an amount which bears the same ratio to the total compensation as the services actually performed and accepted by La Crosse bear to the total services of the Contracting Party covered by this Agreement, less payments for such services as were previously made. The value of the services rendered and delivered by Contracting Party will be determined by La Crosse.

10. SAFETY. Unless specifically included as a service to be provided under this Agreement, La Crosse specifically disclaims any authority or responsibility for general job site safety, or the safety of other persons or property. Except as otherwise provided in this

Agreement, Contracting Party disclaims any authority or responsibility for general job site safety, or the safety of third-parties or their property.

11. DELAYS. If performance of Contracting Party's obligations under this Agreement is delayed through no fault of Contracting Party, Contracting Party shall be entitled to a reasonable extension of time as proposed by Contracting Party and as accepted or amended by La Crosse. If performance of La Crosse's obligations is delayed through no fault of La Crosse, La Crosse shall be entitled to an extension of time equal to the delay.

12. USE OF LA CROSSE PROPERTY. Any property belonging to La Crosse being provided for use by Contracting Party shall be used in a responsible manner and only for the purposes provided in this Agreement. No changes, alterations or additions shall be made to the property unless otherwise authorized by this Agreement..

13. INSURANCE. Unless otherwise specified in this Agreement, Contracting Party shall, at its sole expense, maintain in effect at all times during the Agreement, insurance coverage with limits not less than those set forth below with insurers and under forms of policies set forth below.

a. *Worker's Compensation and Employers Liability Insurance*. Contracting Party shall cover or insure under the applicable labor laws relating to worker's compensation insurance, all of their employees in accordance with the laws of the State of Wisconsin. Contracting Party shall provide statutory coverage for work related injuries and employer's liability insurance with limits of at least for employer's liability of one hundred thousand dollars ($100,000.00) per each accident, one hundred thousand dollars ($100,000.00) per each employee and five hundred thousand dollars ($500,000.00) total policy limit.

b. *Commercial General Liability and Automobile Liability Insurance.* Contracting Party shall provide and maintain the following commercial general liability and automobile liability insurance:

i. Coverage for commercial general liability and automobile liability insurance shall, at a minimum, be at least as broad as the following:
   1. Insurance Services Office (ISO) Commercial General Liability Coverage (Occurrence Form CG 0001).
   2. Insurance Services Office (ISO) Business Auto Coverage (Form CA 0001), covering Symbol 1 (any vehicle).

ii. Contracting Party shall maintain limits no less than the following:
   1. General Liability. Two million dollars ($2,000,000.00) per occurrence ($2,000,000.00 general aggregate if applicable) for bodily injury, personal injury and property damage.
   2. Automobile Liability. Two million dollars ($2,000,000.00) for bodily injury and property damage per occurrence covering all vehicles to be used in relationship to the Agreement.
   3. Umbrella Liability. Five million dollars ($5,000,000.00) following form excess of the primary General Liability, Automobile Liability and Employers Liability Coverage. Coverage is to duplicate the requirements as set forth herein.

c. *Professional Liability Insurance.* When Contracting Party renders professional services to La Crosse under the Agreement, Contracting Party shall provide and maintain two million dollars ($2,000,000.00) of professional liability insurance. If such policy is a "claims made" policy, all renewals thereof during the life of the Agreement shall include "prior acts coverage" covering at all times all claims made with respect to Contracting Party's work performed under the Agreement. This Professional Liability coverage must be kept in force for a period of six (6) years after the services have been accepted by the La Crosse.

d. *Required Provisions.* The general liability, umbrella liability and automobile liability policies are to contain, or be endorsed to contain, the following provisions:

i. La Crosse, its elected and appointed officials, officers, employees or authorized representatives or volunteers are to be given additional insured status (via ISO endorsement CG 2010, CG 2033, or insurer's equivalent for general liability coverage) as respects: liability arising out of activities performed by or on behalf of Contracting Party; products and completed operations of Contracting Party; premises occupied or used by Contracting Party; and vehicles owned, leased, hired or borrowed by Contracting Party. The coverage shall contain no special limitations on the scope of protection afforded to La Crosse, its elected and appointed officials, officers, employees or authorized representatives or volunteers. Except for the workers' compensation policy, each insurance policy shall contain a waiver of subrogation endorsement in favor of La Crosse.

ii. For any claims related to this Agreement, Contracting Party's insurance shall be primary insurance with respect to La Crosse, its elected and appointed officials, officers, employees or authorized representatives or volunteers. Any insurance, self-insurance, or other coverage maintained by La Crosse, its elected and appointed officers, officials, employees or authorized representatives or volunteers shall not contribute to the primary insurance.

iii. Any failure to comply with reporting or other provisions of the policies including breaches of warranties shall not affect coverage provided to La Crosse, its elected and appointed officers, employees or authorized representatives or volunteers.

iv. Contracting Party's insurance shall apply separately to each insured against whom claim is made or suit is brought, except with respect to the limits of the insurer's liability.

v. Coverage shall not be canceled by the insurance carrier or the Contracting Party, except after sixty (60) days (ten (10) days for non-payment of premium) prior written notice by U.S. mail has been given to La Crosse.

vi. Such liability insurance shall indemnify La Crosse, its elected and appointed officials, officers, employees or authorized representatives or volunteers against loss from liability imposed by law upon, or assumed under contract by, Contracting Party for damages on account of such bodily injury, (including death), property damage personal injury, completed operations, and products liability.

vii. The general liability policy shall cover bodily injury and property damage liability, owned and non-owned equipment, blanket contractual liability, completed operations. The automobile liability policy shall cover all owned, non-owned, and hired vehicles.

viii. All of the insurance shall be provided on policy forms and through companies satisfactory to La Crosse, and shall have a minimum AM Best's rating of A- VIII.

e. *Deductibles and Self-Insured Retentions.* Any deductible or self-insured retention must be declared to and approved by La Crosse.

f. *Evidences of Insurance.* Prior to execution of the Agreement, Contracting Party shall file with La Crosse a certificate of insurance (Accord Form 25-S or equivalent) signed by the insurer's representative evidencing the coverage required by this Agreement. Such evidence shall include an additional insured endorsement signed by the insurer's representative. Such evidence shall also include confirmation that coverage includes or has been modified to include all required provisions as detailed herein.

g. *Sub-Contractor.* In the event that Contracting Party employ other contractors (sub-contractors) as part of this Agreement, it shall be the Contracting Party's responsibility to require and confirm that each sub-contractor meets the minimum insurance requirements specified above.

h. *Amendments.* La Crosse may amend its requirements for insurance upon sixty (60) days written notice. Contracting Party shall procure updated insurance to comply with the new requirements of La Crosse if commercially available and at La Crosse's expense. Contracting Party may appeal any requirement to amend the insurance coverage to La Crosse's City Council who may, in its sole discretion, mutually agree to waive such changes.

14. INDEMNIFICATION. To the fullest extent allowable by law, Contracting Party hereby indemnifies and shall defend and hold harmless, at Contracting Party's expense, La Crosse, its elected and appointed officials, committee members, officers, employees, authorized representatives and volunteers ("La Crosse Indemnitees") from and against third party tort suits, actions, legal or administrative proceedings, claims, costs and expenses (including, without limitation, reasonable attorney and professional fees) to the extent caused by the negligent acts, errors or omissions of Contracting Party, its subcontractors or of anyone acting under its direction or control or on its behalf in the performance of this Agreement. Contracting Party's defense obligation shall not apply to professional liability claims. The aforesaid indemnity and hold harmless agreement shall not be applicable to any liability to the extent caused by La Crosse, its elected and appointed officials, officers, employees or authorized representatives, consultants, contractors or volunteers in the performance of this Agreement. Contracting Party's obligation to indemnify, defend and hold harmless shall not be restricted to insurance proceeds, if any, received by La Crosse, its elected and appointed officials, officers, employees, authorized representatives or volunteers.

Nothing in this Agreement is intended or shall be construed to be a waiver or estoppel of La Crosse or its insurer (or otherwise affect or alter their ability) to rely upon the limitations, defenses and immunities contained within Wis. Stat. §§ 345.05 and 893.80, or other applicable law. To the extent that indemnification is available and enforceable against La Crosse, (a) La Crosse or its insurer shall not be liable in indemnity, contribution, or otherwise for an amount greater than the limits of liability of municipal claims established by applicable Wisconsin or federal law; and (b) La Crosse's obligations under this Agreement are further conditioned upon the following: (i) the indemnified party shall promptly notify La Crosse in writing of any such claims, demands, liabilities, damages, costs and expenses within ten (10) days of discovery; (ii) La Crosse shall have sole control of, and the indemnified party shall reasonably cooperate in all respects, in the defense of the claims, demands, liabilities, damages, costs and expenses and all related settlement negotiations; and (iii) the indemnified party shall not make any admission or disclosure or otherwise take any action prejudicial to La Crosse except as required by law.

Neither party shall be liable for indirect, special, exemplary, consequential or incidental damages, including, without limitation, any damages for lost profits, revenue or business interruption. The parties represent that, as of the effective date, neither party has any notice or knowledge of any claims, demands, liabilities, damages, costs and expenses asserted or threatened by any third party with respect to the matters contemplated in this Agreement.

This indemnity provision shall survive the termination or expiration of this Agreement.

15. NO PERSONAL LIABILITY. Under no circumstances shall any trustee, officer, official, commissioner, director, member, partner or employee of either party have any personal liability arising out of this Agreement, unless an employee of the Contracting Party shall commit a criminal, fraudulent, malicious, or dishonest act which is excluded from Contracting Party's insurance coverage.

16. Intentionally omitted.

17. INDEPENDENT CONTRACTORS. The parties, their employees, agents, volunteers, and representative shall be deemed independent contractors of each other and shall in no way be deemed as a result of this Agreement to be employees of the other. The parties, their employees, agents, volunteers, and representatives are not entitled to any of the benefits that the other provides for its

employees. The parties shall not be considered joint agents, joint venturers, or partners.

18. GOVERNING LAW. This Agreement and all questions and issues arising in connection herewith shall be governed by and construed in accordance with the laws of the State of Wisconsin. Venue for any action arising out of or in any way related to this Agreement shall be exclusively in La Crosse County, Wisconsin. Each party waives its right to challenge venue.

19. JURY TRIAL WAIVER. The parties hereby waive their respective rights to a jury trial on any claim or cause of action based upon or arising from or otherwise related to this Agreement. This waiver of right to trial by jury is given knowingly and voluntarily by the parties and is intended to encompass individually each instance and each issue as to which the right to a trial by jury would otherwise accrue. Each party is hereby authorized to file a copy of this section in any proceeding as conclusive evidence of this waiver by the other party.

20. NOTIFICATION. Parties shall:
(1) As soon as possible and in any event within a reasonable period of time after the occurrence of any event of default by either party, notify the other Party in writing of such default and set forth the details thereof and the action which is being taken or proposed to be taken by defaulting party to cure or mitigate the default.
(2) Promptly notify the other Party of the commencement of any litigation or administrative proceeding that would cause any representation contained in this Agreement to be untrue.
(3) If related to the performance of services and work under this Agreement, notify the other Party, and provide copies, immediately, upon receipt, of any notice, pleading, citation, indictment, complaint, order or decree from any federal, state or local government agency or regulatory body, asserting or alleging a circumstance or condition that requires or may require a financial contribution by a Party or any guarantor or an investigation, clean-up, removal, remedial action or other response by or on the part of a Party or any guarantor under any environmental laws, rules, regulations, ordinances or which seeks damages or civil, criminal or punitive penalties from or against a Party or any guarantor for an alleged violation of any environmental laws, rules, regulations or ordinances.

21. SEVERABILITY. The provisions of this Agreement are severable. If any provision or part of this Agreement or the application thereof to any person or circumstance shall be held by a court of competent jurisdiction to be invalid or unconstitutional for any reason, the remainder of this Agreement and the application of such provision or part thereof to other persons or circumstances shall not be affected thereby.

22. ASSIGNMENT, SUBLET, AND TRANSFER. A Party shall not assign, sublet, or transfer its interests or obligations under the provisions of this Agreement without the prior written consent of the other Party. This Agreement shall be binding on the heirs, successors, and permitted assigns of each party hereto. A Party shall provide not less than forty-five (45) days advance written notice of request to assign, sublet or transfer any services provided under this Agreement. The decision to allow an assignment by Contracting Party rests solely with La Crosse, in its discretion

23. NO WAIVER. The failure of any party to insist, in any one or more instance, upon performance of any of the terms, covenants, or conditions of this Agreement shall not be construed as a waiver, or relinquishment of the future performance of any such term, covenant, or condition by any other party hereto but the obligation of such other party with respect to such future performance shall continue in full force and effect.

24. SUBCONTRACTING. None of the services to be performed under this Agreement shall be subcontracted without the prior written approval of La Crosse. If any of the services are subcontracted, the performance of such services shall be specified by written contract and shall be subject to each provision of this Agreement. Contracting Party shall be as fully responsible to La Crosse for the acts and omissions of its subcontractors and of person either directly or indirectly employed by them, as it is for acts and omissions of persons directly employed by it.

25. CONFLICTS OF INTEREST. Contracting Party covenants that it presently has no interest and shall not acquire any interest, direct or indirect, which would conflict in any manner or degree with the performance of its services hereunder. Contracting Party further covenants that in the performance of this Agreement no person having any conflicting interest shall be employed. Any interest on the part of Contracting Party or its employee must be disclosed to La Crosse

26. NON-DISCRIMINATION. Pursuant to law, it is unlawful and Contracting Party agrees not to willfully refuse to employ, to discharge, or to discriminate against any person otherwise qualified because of race, color, religion, sex, sexual orientation, age, disability, national origin or ancestry, lawful source of income, marital status, creed, or familial status; not to discriminate for the same reason in regard to tenure, terms, or conditions of employment, not to deny promotion or increase in compensation solely for these reasons; not to adopt or enforce any employment policy which discriminates between employees on account of race, color, religion, sex, creed, age, disability, national origin or ancestry, lawful source of income, marital status or familial status; not to seek such information as to any employee as a condition of employment; not to penalize any employee or discriminate in the selection of personnel for training, solely on the basis of race, color, religion, sex, sexual orientation, age, disability, national origin or ancestry, lawful source of income, marital status, creed or familial status.

Contracting Party shall include or cause to be included in each subcontract covering any of the services to be performed under this Agreement a provision similar to the above paragraph, together with a clause requiring such insertion in further subcontracts that may in turn be made.

27. POLITICAL ACTIVITIES. Contracting Party employees shall not engage in any political activities within the City of La Crosse while in performance of any and all services and work under this Agreement. This does not apply to periods of time in which employee is not at work, or is billing other than La Crosse for his/ her time.

28. GOVERNMENTAL APPROVALS. Contracting Party acknowledges that various of the specific undertakings of La Crosse described in this Agreement may require approvals from the City of La Crosse Council, City of La Crosse bodies, and/or other public bodies, some of which may require public hearings and other legal proceedings as conditions precedent thereto. Contracting Party further acknowledges that this Agreement is subject to appropriation by the La Crosse Common Council. La Crosse's obligation to perform under this Agreement is conditioned upon obtaining all such approvals in the manner required by law. La Crosse cannot assure that all such approvals will be obtained, however, it agrees to use good faith efforts to obtain such approvals on a timely basis. .

29. ENTIRE AND SUPERSEDING AGREEMENT. This writing, all Exhibits hereto, and the other documents and agreements referenced herein, constitute the entire Agreement between the parties with respect to the subject matter hereof, and all prior agreements, correspondences, discussions and understandings of the parties (whether written or oral) are merged herein and made a part hereof. To the extent that any terms and conditions contained in this Agreement, all Exhibits hereto, and the other documents and agreement referenced herein conflict with these Standard Terms and Conditions, the Standard Terms and Conditions shall take precedence.

30. AMENDMENT. This Agreement shall be amended only by formal written supplementary amendment. No oral amendment of this Agreement shall be given any effect. All amendments to this Agreement shall be in writing executed by both parties.

31. IMPLEMENTATION SCHEDULE AND TIME OF THE ESSENCE. Any and all phases and schedules which are the subject of approvals, or as set forth herein, shall be governed by the principle that modification or deviation from such schedules shall occur only upon approval of La Crosse or reasons of Force Majeure. Any phase or schedule that is determined to be "time of the essence" shall be specifically identified as such within the scope of services. The Mayor, or in the Mayor's absence, the Council President, shall have the ability to postpone any deadline listed herein, up to a maximum of ninety (90) days. If such delays cause additional cost, Contracting Party shall be reimbursed.

32. TIME COMPUTATION. Any period of time described in this Agreement by reference to a number of days includes Saturdays, Sundays, and any state or national holidays. Any period of time described in this Agreement by reference to a number of business days does not include Saturdays, Sundays or any state or national holidays. If the date or last date to perform any act or to give any notices is a Saturday, Sunday or state or national holiday, that act or notice may be timely performed or given on the next succeeding day which is not a Saturday, Sunday or state or national holiday.

33. NOTICES. Any notice, demand, certificate or other communication under this Agreement shall be given in writing and deemed effective: a) when personally delivered; b) three (3) days after deposit within the United States Postal Service, postage prepaid, certified, return receipt requested; or c) one (1) business day after deposit with a nationally recognized overnight courier service, addressed by name and to the party or person intended as follows:

To the City:	Attn. City Clerk City of La Crosse 400 La Crosse Street La Crosse, WI 54601	Copy to:	Attn. City Attorney City of La Crosse 400 La Crosse Street La Crosse, WI 54601

Contracting Party shall identify in writing and provide to La Crosse the contact person and address for notices under this Agreement.

34. Intentionally omitted.

35. ACCESS TO RECORDS. Contracting Party, at its sole expense, shall maintain books, records, documents and other evidence pertinent to this Agreement in accordance with accepted applicable professional practices. La Crosse, or any of its duly authorized representatives, shall have access, at no cost to La Crosse, to such books, records, documents, papers or any records, including electronic, of Contracting Party which are pertinent to the hourly rates of pay and reimbursable costs under this Agreement, for the purpose of making audits, examinations, excerpts and transcriptions. Once deliverables are provided to La Crosse, additional copies will be provided for a fee.

36. PUBLIC RECORDS LAW. Contracting Party understands and acknowledges that La Crosse is subject to the Public Records Law of the State of Wisconsin. As such, Contracting Party agrees to retain all records as defined by Wisconsin Statute § 19.32(2) applicable to this Agreement for a period of not less than seven (7) years after the termination or expiration of this Agreement. Contracting Party agrees to assist La Crosse in complying with any public records request that La Crosse receives pertaining to this Agreement. If the requested record is not within that which is required to be produced by statute or other authority, then Contracting Party may object, and La Crosse will reject the request. Contracting Party shall seek to intervene in any subsequent public records lawsuit, writ of mandamus, or other action against La Crosse seeking to compel disclosure in order to dispute disclosure of the requested record. Contracting Party shall also cooperate and provide assistance to La Crosse, at no cost, in the defense of such lawsuit, writ or other action. If the request is upheld by a court of law, then Contracting Party will produce the records or indemnify and hold harmless La Crosse Indemnitees from any liability, including without limitation, attorney fees related to or in any way arising from Contracting Party's actions or omissions which contribute to La Crosse's inability to comply with the Public Records Law. In the event that Contracting Party decides not to retain its records for a period of seven (7) years, then it shall provide written

notice to La Crosse whereupon La Crosse shall take custody of said records assuming such records are not already maintained by La Crosse. This provision shall survive the termination of this Agreement.

37. CONSTRUCTION. This Agreement shall be construed without regard to any presumption or rule requiring construction against the party causing such instrument to be drafted. This agreement shall be deemed to have been drafted by the parties of equal bargaining strength. The captions appearing at the first of each numbered section of this Agreement are inserted and included solely for convenience but shall never be considered or given any effect in construing this Agreement with the duties, obligations, or liabilities of the respective hereto or in ascertaining intent, if any questions of intent should arise. All terms and words used in this Agreement, whether singular or plural and regardless of the gender thereof, shall be deemed to include any other number and any other gender as the context may require.

38. NO THIRD-PARTY BENEFICIARY. Nothing contained in this Agreement, nor the performance of the parties hereunder, is intended to benefit, nor shall inure to the benefit of, any third party.

39. COMPLIANCE WITH LAW. The parties shall comply in all material respects with applicable federal, state and local laws, regulations and ordinances.

40. FORCE MAJEURE. Neither Party shall be responsible for any resulting losses and it shall not be a default hereunder if the fulfillment of any of the terms of this Agreement is delayed or prevented by revolutions or other civil disorders, wars, acts of enemies, strikes, fires, floods, acts of God, adverse weather conditions, legally required environmental remedial actions, industry-wide shortage of materials, or by any other cause not within the control of the party whose performance was interfered with, and which exercise of reasonable diligence, such party is unable to prevent, whether of the class of causes hereinabove enumerated or not, and the time for performance shall be extended by the period of delay occasioned by any such cause.

41. GOOD STANDING. Contracting Party affirms that it is a company duly formed and validly existing and in good standing under the laws of the State of Wisconsin and has the power and all necessary licenses, permits and franchises to own its assets and properties and to carry on its business. Contracting Party is duly licensed or qualified to do business and is in good standing in the State of Wisconsin and in all other jurisdictions in which failure to do so would have a material adverse effect on its business or financial condition.

42. AUTHORITY. The persons signing this Agreement warrant that they have the authority to sign as, or on behalf of, the party for whom they are signing.

43. EXECUTION OF AGREEMENT. Contracting Party shall sign and execute this Agreement on or before sixty (60) days of its approval by the La Crosse Common Council, and Contracting Party's failure to do so will render the approval of the Agreement by the La Crosse Common Council null and void unless otherwise authorized.

44. COUNTERPARTS. This Agreement may be executed in one or more counterparts, all of which shall be considered but one and the same agreements and shall become effective when one or more counterparts have been signed by each of the parties and delivered to the other party.

45. SURVIVAL. All express representations, indemnifications and limitations of liability included in this Agreement will survive its completion or termination.

46. COMPLIANCE WITH LAW. Contracting Party agrees to abide by applicable federal, state and local laws, regulations and ordinances, and all provisions of this Agreement.

47. RELIANCE. Contracting Party has the right to reasonably rely on information provided by or through La Crosse.

Revised:
06.21.19

City of La Crosse, Wisconsin

City Hall
400 La Crosse Street
La Crosse, WI 54601

Text File

File Number: 25-1045

Agenda Date: 9/2/2025 **Version:** 1 **Status:** Agenda Ready

In Control: Board of Public Works **File Type:** General Item

CITY OF LA CROSSE

Wastewater UTILITY

905 Joseph Houska Drive
La Crosse WI 54601
Phone (608) 789-7330
Fax (608) 789-3816

Jared Greeno - Wastewater
General Superintendent
608-789-7322
greenoj@cityoflacrosse.org

August 26, 2025

Subject: Donohue Electric Utility DTT Implementation-BPW-Request

To: BPW,

In 2022 we applied to Xcel Energy to produce our own electricity at WWTP. When we went to commission the Co Gen unit to produce electricity in April 2024 Xcel indicated we needed a Direct Transfer Switch that would communicate with the local substation in the event of a power outage. We then June 2024 started working with Xcel to design and understand the scope of what was needed to produce our own electricity. We now know the scope of this project. Radio study has been conducted, design work for Xcel is getting closer to completion, now City of La Crosse WWTP needs to hire a consultant to design and formalize specs to install a direct transfer switch on the La Crosse WWTP Co Gen switch gear as to not back feed power, double protection in the event of a power outage.

The funding source for this Service will be account 630 101141 – Restricted Cash Connection Fee Fund that can only be used for improvements at the WWTP. I ask for approval of this agreement.

Sincerely,
Jared Greeno
City of La Crosse
Wastewater Superintendent

DONOHUE

ENGINEERING SERVICES AGREEMENT

Electrical Utility Direct Transfer Trip Implementation (Project)

This Agreement is by and between:

City of La Crosse (Owner)
400 La Crosse Street
La Crosse, WI 54601

and

Donohue & Associates, Inc. (Donohue)
3311 Weeden Creek Road
Sheboygan, WI 53081

Who agree as follows:

Owner hereby engages Donohue to perform the Services set forth in Part I for the compensation set forth in Part III. Donohue will be authorized to commence the Services upon execution and receipt of this Agreement from Owner. Owner and Donohue agree that this signature page, together with Parts I through IV attached, constitute the entire agreement for this Project.

APPROVED FOR OWNER

By: _____

Printed Name: _____

Title: _____

Date: _____

APPROVED FOR DONOHUE

By: _____

Printed Name: _____

Title: _____

Date: _____

PART I
PROJECT DESCRIPTION/SCOPE OF SERVICES/TIMING

A. PROJECT DESCRIPTION

The purpose of this Project is to coordinate with the electric utility (Xcel Energy) and provide the necessary communication equipment and relays to implement a direct transfer trip (DTT) that will remove the biogas engine from service by Xcel Energy when it is desired to be disconnected from the electric grid. This equipment is planned to be installed and tested simultaneous to the Swift Substation equipment provided by Xcel Energy.

B. SCOPE OF SERVICES

Services to be provided by Donohue for this Project under this Agreement are delineated as follows:

1. Participate in monthly coordination calls with Xcel Energy, quantity 10.

2. Coordinate with Xcel to identify the radio system being provided at the Swift Substation.

3. Confirm technical details of the radio (type, encryption, cabling, antenna height, power supply, I/O connections) and associated I/O module.

4. Utilize City of La Crosse standard specifications to draft biddable contract documents to source, install, program, and commission the communication system. Prepare interconnect drawings, mounting details, and technical specifications related to the radio system and DTT. It is assumed that the DC battery system in the Building 500 Electrical Room has sufficient capacity to power the new communication equipment and the antenna will be mounted on the roof of Building 500.

5. Conduct a workshop with the City to review draft bidding documents.

6. Incorporate review comments and finalize documents for bidding.

7. Coordinate solicitation for bid with City staff. Conduct bid advertisement, bid addenda, bid opening, and bid recommendation for award.

8. Construction related services are not included.

C. PROJECT TIMING

1. Donohue shall be authorized to commence the Services set forth herein upon execution of this Agreement. Draft bidding documents will be provided by September 5, 2025, pending coordination with Xcel Energy's ultimate schedule.

2. Donohue's services under this Agreement will be considered complete when Donohue has delivered to Owner all the deliverables defined in under the Scope of Services.

PART II
OWNER RESPONSIBILITIES

A. In addition to other responsibilities of Owner set forth in this Agreement, Owner shall:

1. Identify a person authorized to act as the Owner's representative to respond to questions and make decisions on behalf of Owner, accept completed documents, approve payments to Donohue, and serve as liaison with Donohue as necessary for Donohue to complete its Services.

2. Furnish to Donohue copies of existing documents and data pertinent to Donohue's Scope of Services, including but not limited to and where applicable: design and record drawings for existing facilities; property descriptions, land use restrictions, surveys, geotechnical and environmental studies, or assessments.

3. Owner shall be responsible for all requirements and instructions that it furnishes to Donohue pursuant to this Agreement, and for the accuracy and completeness of all reports, data, programs, and other information furnished by Owner to Donohue pursuant to this Agreement. Donohue may use and rely upon such requirements, instructions, reports, data, programs, and information in performing or furnishing services under this Agreement, subject to any express limitations or reservations provided by Owner applicable to the furnished items.

4. Provide to Donohue existing information regarding the existence and locations of utilities and underground facilities.

5. Provide Donohue safe access to premises necessary for Donohue to provide the Services.

6. Inform Donohue whenever Owner observes or becomes aware of a Hazardous Environmental Conditions, as defined in Part IV.3. of this Agreement, that may affect Donohue's Scope of Services or time for performance.

PART III
COMPENSATION, BILLING AND PAYMENT

A. Compensation for the work as defined in the Scope of Services (Part I) of this Agreement shall be a lump sum of $24,770.

B. Donohue will bill Owner monthly, with net payment due in 30 days. The invoice will contain a calculation of the amount of lump sum due based on percentage of Project completed during the billing period.

C. Donohue will notify Owner if Project scope changes require modifications to the above-stated contract value. Services relative to scope changes will not be initiated without written authorization from Owner.

1. DEFINITIONS. In this section "Contracting Party" shall mean any party that is entering into this Agreement with the City of La Crosse. "La Crosse" shall mean the City of La Crosse. These definitions shall apply only to this document titled "Standard Terms and Conditions (Service Contracts)" and shall not replace, modify or supersede any definitions used in other sections of this Agreement.

2. STANDARD OF PERFORMANCE. Contracting Party agrees that the performance of the services, pursuant to the terms and conditions of this Agreement, shall be in a manner at least equal to the degree of care and skill ordinarily exercised by members of the same professions currently practicing under similar circumstances providing like services

3. FULLY QUALIFIED. Contracting Party represents that all personnel engaged in the performance of the services set forth in this Agreement shall be fully qualified and, if applicable, shall be authorized or permitted under all applicable state and local laws and any other applicable laws or regulations to perform the services.

4. SCOPE OF SERVICES. Contracting Party is required to perform, do and carryout in a timely and professional manner the services set forth in this Agreement. The Contracting Party is required to furnish all services and labor necessary as indicated in this Agreement. The scope of services to be performed shall include, those services set forth in this Agreement. La Crosse may from time to time request the Contracting Party to perform additional services which are not set forth in this Agreement. In the event that such a request is made, the performance of such services shall be subject to the terms, conditions and contingencies set forth in this Agreement.

5. CHANGE OF SCOPE. The scope of service set forth in this Agreement is based on facts known at the time of the execution of this Agreement. The scope of service may not be fully definable during initial phases, and as the project progresses, facts discovered may indicate that the scope must be redefined. If mutually agreed to in advance in writing, Contracting Party shall make changes, furnish necessary materials, and perform the work that La Crosse may require, without nullifying this Agreement, at a reasonable addition to, or reduction from, the total cost of the project. Under no circumstances shall Contracting Party make any changes, either as additions or deductions, without the written consent of La Crosse, and La Crosse shall not pay any extra charges made by Contracting Party that have not been agreed upon in advance and documented in writing.

6. COMPENSATION. Contracting Party will be compensated by La Crosse for the services provided under this Agreement and subject to the terms, conditions and contingences set forth herein. Payments to Contracting Party for services rendered under this Agreement will be based on itemized invoices submitted on a monthly basis by the Contracting Party to La Crosse. These invoices, unless lump sum, must be itemized to identify labor costs and the Contracting Party's direct expenses, including subcontractor and supplier costs. In addition, such invoices shall show the hours worked by the Contracting Party's staff and the amount of work completed as a percentage of the work to be performed. If payment is by lump sum, then only the percent complete will be invoiced. The final payment of the balance due the Contracting Party for the completed service shall be made upon completion and acceptance of the services performed by the Contracting Party under this Agreement. Without prejudice to any other right or remedy it may have, La Crosse reserves the right to setoff at any time any amount owing to it by Contracting Party against any amount payable by La Crosse to Contracting Party.

7. TAXES, SOCIAL SECURITY, INSURANCE AND GOVERNMENT REPORTING. Personal income tax payments, social security contributions, insurance and all other governmental reporting and contributions required as a consequence of the Contracting Party receiving payment under this Agreement shall be the sole responsibility of the Contracting Party.

8. TERMINATION FOR CAUSE. If, through its own fault, intentional misconduct, or the fault or intentional misconduct of its subcontractors, agents or volunteers, the Contracting Party shall fail to fulfill in a timely and proper manner its obligations under this Agreement, or if the Contracting Party shall violate any of the covenants, agreements, or stipulations of this Agreement, both as determined by La Crosse in its sole discretion, La Crosse shall thereupon have the right to terminate this Agreement by giving written notice to the Contracting Party of such termination and specifying the effective date. In such event, all finished or unfinished documents, data, studies, surveys, drawings, maps, models, photographs, reports or other deliverables performed by the Contracting Party under this Agreement for which compensation has been made shall, at the option of La Crosse, become the property of La Crosse. Notwithstanding the foregoing, the Contracting Party shall not be relieved of liability to La Crosse for damages sustained by La Crosse by virtue of the Contracting Party's intentional misconduct or negligent performance of this Agreement, and La Crosse may withhold any payments to the Contracting Party for the purpose of setoff until such time as the exact amount of damages due to La Crosse from the Contracting Party is determined. Use of incomplete or unfinished work is at the sole risk of La Crosse.

9. TERMINATION FOR CONVENIENCE. Either Party may terminate this Agreement for convenience at any time and for any reason by giving sixty (60) days written notice to the other Party of such termination. If this Agreement is terminated by La Crosse pursuant to this provision, Contracting Party will be paid an amount which bears the same ratio to the total compensation as the services actually performed and accepted by La Crosse bear to the total services of the Contracting Party covered by this Agreement, less payments for such services as were previously made. The value of the services rendered and delivered by Contracting Party will be determined by La Crosse.

10. SAFETY. Unless specifically included as a service to be provided under this Agreement, La Crosse specifically disclaims any authority or responsibility for general job site safety, or the safety of other persons or property. Except as otherwise provided in this

Agreement, Contracting Party disclaims any authority or responsibility for general job site safety, or the safety of third-parties or their property.

11. DELAYS. If performance of Contracting Party's obligations under this Agreement is delayed through no fault of Contracting Party, Contracting Party shall be entitled to a reasonable extension of time as proposed by Contracting Party and as accepted or amended by La Crosse. If performance of La Crosse's obligations is delayed through no fault of La Crosse, La Crosse shall be entitled to an extension of time equal to the delay.

12. USE OF LA CROSSE PROPERTY. Any property belonging to La Crosse being provided for use by Contracting Party shall be used in a responsible manner and only for the purposes provided in this Agreement. No changes, alterations or additions shall be made to the property unless otherwise authorized by this Agreement..

13. INSURANCE. Unless otherwise specified in this Agreement, Contracting Party shall, at its sole expense, maintain in effect at all times during the Agreement, insurance coverage with limits not less than those set forth below with insurers and under forms of policies set forth below.

a. *Worker's Compensation and Employers Liability Insurance*. Contracting Party shall cover or insure under the applicable labor laws relating to worker's compensation insurance, all of their employees in accordance with the laws of the State of Wisconsin. Contracting Party shall provide statutory coverage for work related injuries and employer's liability insurance with limits of at least for employer's liability of one hundred thousand dollars ($100,000.00) per each accident, one hundred thousand dollars ($100,000.00) per each employee and five hundred thousand dollars ($500,000.00) total policy limit.

b. *Commercial General Liability and Automobile Liability Insurance.* Contracting Party shall provide and maintain the following commercial general liability and automobile liability insurance:

i. Coverage for commercial general liability and automobile liability insurance shall, at a minimum, be at least as broad as the following:
   1. Insurance Services Office (ISO) Commercial General Liability Coverage (Occurrence Form CG 0001).
   2. Insurance Services Office (ISO) Business Auto Coverage (Form CA 0001), covering Symbol 1 (any vehicle).

ii. Contracting Party shall maintain limits no less than the following:
   1. General Liability. Two million dollars ($2,000,000.00) per occurrence ($2,000,000.00 general aggregate if applicable) for bodily injury, personal injury and property damage.
   2. Automobile Liability. Two million dollars ($2,000,000.00) for bodily injury and property damage per occurrence covering all vehicles to be used in relationship to the Agreement.
   3. Umbrella Liability. Five million dollars ($5,000,000.00) following form excess of the primary General Liability, Automobile Liability and Employers Liability Coverage. Coverage is to duplicate the requirements as set forth herein.

c. *Professional Liability Insurance.* When Contracting Party renders professional services to La Crosse under the Agreement, Contracting Party shall provide and maintain two million dollars ($2,000,000.00) of professional liability insurance. If such policy is a "claims made" policy, all renewals thereof during the life of the Agreement shall include "prior acts coverage" covering at all times all claims made with respect to Contracting Party's work performed under the Agreement. This Professional Liability coverage must be kept in force for a period of six (6) years after the services have been accepted by the La Crosse.

d. *Required Provisions.* The general liability, umbrella liability and automobile liability policies are to contain, or be endorsed to contain, the following provisions:

i. La Crosse, its elected and appointed officials, officers, employees or authorized representatives or volunteers are to be given additional insured status (via ISO endorsement CG 2010, CG 2033, or insurer's equivalent for general liability coverage) as respects: liability arising out of activities performed by or on behalf of Contracting Party; products and completed operations of Contracting Party; premises occupied or used by Contracting Party; and vehicles owned, leased, hired or borrowed by Contracting Party. The coverage shall contain no special limitations on the scope of protection afforded to La Crosse, its elected and appointed officials, officers, employees or authorized representatives or volunteers. Except for the workers' compensation policy, each insurance policy shall contain a waiver of subrogation endorsement in favor of La Crosse.

ii. For any claims related to this Agreement, Contracting Party's insurance shall be primary insurance with respect to La Crosse, its elected and appointed officials, officers, employees or authorized representatives or volunteers. Any insurance, self-insurance, or other coverage maintained by La Crosse, its elected and appointed officers, officials, employees or authorized representatives or volunteers shall not contribute to the primary insurance.

iii. Any failure to comply with reporting or other provisions of the policies including breaches of warranties shall not affect coverage provided to La Crosse, its elected and appointed officers, employees or authorized representatives or volunteers.

iv. Contracting Party's insurance shall apply separately to each insured against whom claim is made or suit is brought, except with respect to the limits of the insurer's liability.

v. Coverage shall not be canceled by the insurance carrier or the Contracting Party, except after sixty (60) days (ten (10) days for non-payment of premium) prior written notice by U.S. mail has been given to La Crosse.

vi. Such liability insurance shall indemnify La Crosse, its elected and appointed officials, officers, employees or authorized representatives or volunteers against loss from liability imposed by law upon, or assumed under contract by, Contracting Party for damages on account of such bodily injury, (including death), property damage personal injury, completed operations, and products liability.

vii. The general liability policy shall cover bodily injury and property damage liability, owned and non-owned equipment, blanket contractual liability, completed operations. The automobile liability policy shall cover all owned, non-owned, and hired vehicles.

viii. All of the insurance shall be provided on policy forms and through companies satisfactory to La Crosse, and shall have a minimum AM Best's rating of A- VIII.

e. *Deductibles and Self-Insured Retentions.* Any deductible or self-insured retention must be declared to and approved by La Crosse.

f. *Evidences of Insurance.* Prior to execution of the Agreement, Contracting Party shall file with La Crosse a certificate of insurance (Accord Form 25-S or equivalent) signed by the insurer's representative evidencing the coverage required by this Agreement. Such evidence shall include an additional insured endorsement signed by the insurer's representative. Such evidence shall also include confirmation that coverage includes or has been modified to include all required provisions as detailed herein.

g. *Sub-Contractor.* In the event that Contracting Party employ other contractors (sub-contractors) as part of this Agreement, it shall be the Contracting Party's responsibility to require and confirm that each sub-contractor meets the minimum insurance requirements specified above.

h. *Amendments.* La Crosse may amend its requirements for insurance upon sixty (60) days written notice. Contracting Party shall procure updated insurance to comply with the new requirements of La Crosse if commercially available and at La Crosse's expense. Contracting Party may appeal any requirement to amend the insurance coverage to La Crosse's City Council who may, in its sole discretion, mutually agree to waive such changes.

14. INDEMNIFICATION. To the fullest extent allowable by law, Contracting Party hereby indemnifies and shall defend and hold harmless, at Contracting Party's expense, La Crosse, its elected and appointed officials, committee members, officers, employees, authorized representatives and volunteers ("La Crosse Indemnitees") from and against third party tort suits, actions, legal or administrative proceedings, claims, costs and expenses (including, without limitation, reasonable attorney and professional fees) to the extent caused by the negligent acts, errors or omissions of Contracting Party, its subcontractors or of anyone acting under its direction or control or on its behalf in the performance of this Agreement. Contracting Party's defense obligation shall not apply to professional liability claims. The aforesaid indemnity and hold harmless agreement shall not be applicable to any liability to the extent caused by La Crosse, its elected and appointed officials, officers, employees or authorized representatives, consultants, contractors or volunteers in the performance of this Agreement. Contracting Party's obligation to indemnify, defend and hold harmless shall not be restricted to insurance proceeds, if any, received by La Crosse, its elected and appointed officials, officers, employees, authorized representatives or volunteers.

Nothing in this Agreement is intended or shall be construed to be a waiver or estoppel of La Crosse or its insurer (or otherwise affect or alter their ability) to rely upon the limitations, defenses and immunities contained within Wis. Stat. §§ 345.05 and 893.80, or other applicable law. To the extent that indemnification is available and enforceable against La Crosse, (a) La Crosse or its insurer shall not be liable in indemnity, contribution, or otherwise for an amount greater than the limits of liability of municipal claims established by applicable Wisconsin or federal law; and (b) La Crosse's obligations under this Agreement are further conditioned upon the following: (i) the indemnified party shall promptly notify La Crosse in writing of any such claims, demands, liabilities, damages, costs and expenses within ten (10) days of discovery; (ii) La Crosse shall have sole control of, and the indemnified party shall reasonably cooperate in all respects, in the defense of the claims, demands, liabilities, damages, costs and expenses and all related settlement negotiations; and (iii) the indemnified party shall not make any admission or disclosure or otherwise take any action prejudicial to La Crosse except as required by law.

Neither party shall be liable for indirect, special, exemplary, consequential or incidental damages, including, without limitation, any damages for lost profits, revenue or business interruption. The parties represent that, as of the effective date, neither party has any notice or knowledge of any claims, demands, liabilities, damages, costs and expenses asserted or threatened by any third party with respect to the matters contemplated in this Agreement.

This indemnity provision shall survive the termination or expiration of this Agreement.

15. NO PERSONAL LIABILITY. Under no circumstances shall any trustee, officer, official, commissioner, director, member, partner or employee of either party have any personal liability arising out of this Agreement, unless an employee of the Contracting Party shall commit a criminal, fraudulent, malicious, or dishonest act which is excluded from Contracting Party's insurance coverage.

16. Intentionally omitted.

17. INDEPENDENT CONTRACTORS. The parties, their employees, agents, volunteers, and representative shall be deemed independent contractors of each other and shall in no way be deemed as a result of this Agreement to be employees of the other. The parties, their employees, agents, volunteers, and representatives are not entitled to any of the benefits that the other provides for its

employees. The parties shall not be considered joint agents, joint venturers, or partners.

18. GOVERNING LAW. This Agreement and all questions and issues arising in connection herewith shall be governed by and construed in accordance with the laws of the State of Wisconsin. Venue for any action arising out of or in any way related to this Agreement shall be exclusively in La Crosse County, Wisconsin. Each party waives its right to challenge venue.

19. JURY TRIAL WAIVER. The parties hereby waive their respective rights to a jury trial on any claim or cause of action based upon or arising from or otherwise related to this Agreement. This waiver of right to trial by jury is given knowingly and voluntarily by the parties and is intended to encompass individually each instance and each issue as to which the right to a trial by jury would otherwise accrue. Each party is hereby authorized to file a copy of this section in any proceeding as conclusive evidence of this waiver by the other party.

20. NOTIFICATION. Parties shall:
(1) As soon as possible and in any event within a reasonable period of time after the occurrence of any event of default by either party, notify the other Party in writing of such default and set forth the details thereof and the action which is being taken or proposed to be taken by defaulting party to cure or mitigate the default.
(2) Promptly notify the other Party of the commencement of any litigation or administrative proceeding that would cause any representation contained in this Agreement to be untrue.
(3) If related to the performance of services and work under this Agreement, notify the other Party, and provide copies, immediately, upon receipt, of any notice, pleading, citation, indictment, complaint, order or decree from any federal, state or local government agency or regulatory body, asserting or alleging a circumstance or condition that requires or may require a financial contribution by a Party or any guarantor or an investigation, clean-up, removal, remedial action or other response by or on the part of a Party or any guarantor under any environmental laws, rules, regulations, ordinances or which seeks damages or civil, criminal or punitive penalties from or against a Party or any guarantor for an alleged violation of any environmental laws, rules, regulations or ordinances.

21. SEVERABILITY. The provisions of this Agreement are severable. If any provision or part of this Agreement or the application thereof to any person or circumstance shall be held by a court of competent jurisdiction to be invalid or unconstitutional for any reason, the remainder of this Agreement and the application of such provision or part thereof to other persons or circumstances shall not be affected thereby.

22. ASSIGNMENT, SUBLET, AND TRANSFER. A Party shall not assign, sublet, or transfer its interests or obligations under the provisions of this Agreement without the prior written consent of the other Party. This Agreement shall be binding on the heirs, successors, and permitted assigns of each party hereto. A Party shall provide not less than forty-five (45) days advance written notice of request to assign, sublet or transfer any services provided under this Agreement. The decision to allow an assignment by Contracting Party rests solely with La Crosse, in its discretion

23. NO WAIVER. The failure of any party to insist, in any one or more instance, upon performance of any of the terms, covenants, or conditions of this Agreement shall not be construed as a waiver, or relinquishment of the future performance of any such term, covenant, or condition by any other party hereto but the obligation of such other party with respect to such future performance shall continue in full force and effect.

24. SUBCONTRACTING. None of the services to be performed under this Agreement shall be subcontracted without the prior written approval of La Crosse. If any of the services are subcontracted, the performance of such services shall be specified by written contract and shall be subject to each provision of this Agreement. Contracting Party shall be as fully responsible to La Crosse for the acts and omissions of its subcontractors and of person either directly or indirectly employed by them, as it is for acts and omissions of persons directly employed by it.

25. CONFLICTS OF INTEREST. Contracting Party covenants that it presently has no interest and shall not acquire any interest, direct or indirect, which would conflict in any manner or degree with the performance of its services hereunder. Contracting Party further covenants that in the performance of this Agreement no person having any conflicting interest shall be employed. Any interest on the part of Contracting Party or its employee must be disclosed to La Crosse

26. NON-DISCRIMINATION. Pursuant to law, it is unlawful and Contracting Party agrees not to willfully refuse to employ, to discharge, or to discriminate against any person otherwise qualified because of race, color, religion, sex, sexual orientation, age, disability, national origin or ancestry, lawful source of income, marital status, creed, or familial status; not to discriminate for the same reason in regard to tenure, terms, or conditions of employment, not to deny promotion or increase in compensation solely for these reasons; not to adopt or enforce any employment policy which discriminates between employees on account of race, color, religion, sex, creed, age, disability, national origin or ancestry, lawful source of income, marital status or familial status; not to seek such information as to any employee as a condition of employment; not to penalize any employee or discriminate in the selection of personnel for training, solely on the basis of race, color, religion, sex, sexual orientation, age, disability, national origin or ancestry, lawful source of income, marital status, creed or familial status.

Contracting Party shall include or cause to be included in each subcontract covering any of the services to be performed under this Agreement a provision similar to the above paragraph, together with a clause requiring such insertion in further subcontracts that may in turn be made.

27. POLITICAL ACTIVITIES. Contracting Party employees shall not engage in any political activities within the City of La Crosse while in performance of any and all services and work under this Agreement. This does not apply to periods of time in which employee is not at work, or is billing other than La Crosse for his/ her time.

28. GOVERNMENTAL APPROVALS. Contracting Party acknowledges that various of the specific undertakings of La Crosse described in this Agreement may require approvals from the City of La Crosse Council, City of La Crosse bodies, and/or other public bodies, some of which may require public hearings and other legal proceedings as conditions precedent thereto. Contracting Party further acknowledges that this Agreement is subject to appropriation by the La Crosse Common Council. La Crosse's obligation to perform under this Agreement is conditioned upon obtaining all such approvals in the manner required by law. La Crosse cannot assure that all such approvals will be obtained, however, it agrees to use good faith efforts to obtain such approvals on a timely basis. .

29. ENTIRE AND SUPERSEDING AGREEMENT. This writing, all Exhibits hereto, and the other documents and agreements referenced herein, constitute the entire Agreement between the parties with respect to the subject matter hereof, and all prior agreements, correspondences, discussions and understandings of the parties (whether written or oral) are merged herein and made a part hereof. To the extent that any terms and conditions contained in this Agreement, all Exhibits hereto, and the other documents and agreement referenced herein conflict with these Standard Terms and Conditions, the Standard Terms and Conditions shall take precedence.

30. AMENDMENT. This Agreement shall be amended only by formal written supplementary amendment. No oral amendment of this Agreement shall be given any effect. All amendments to this Agreement shall be in writing executed by both parties.

31. IMPLEMENTATION SCHEDULE AND TIME OF THE ESSENCE. Any and all phases and schedules which are the subject of approvals, or as set forth herein, shall be governed by the principle that modification or deviation from such schedules shall occur only upon approval of La Crosse or reasons of Force Majeure. Any phase or schedule that is determined to be "time of the essence" shall be specifically identified as such within the scope of services. The Mayor, or in the Mayor's absence, the Council President, shall have the ability to postpone any deadline listed herein, up to a maximum of ninety (90) days. If such delays cause additional cost, Contracting Party shall be reimbursed.

32. TIME COMPUTATION. Any period of time described in this Agreement by reference to a number of days includes Saturdays, Sundays, and any state or national holidays. Any period of time described in this Agreement by reference to a number of business days does not include Saturdays, Sundays or any state or national holidays. If the date or last date to perform any act or to give any notices is a Saturday, Sunday or state or national holiday, that act or notice may be timely performed or given on the next succeeding day which is not a Saturday, Sunday or state or national holiday.

33. NOTICES. Any notice, demand, certificate or other communication under this Agreement shall be given in writing and deemed effective: a) when personally delivered; b) three (3) days after deposit within the United States Postal Service, postage prepaid, certified, return receipt requested; or c) one (1) business day after deposit with a nationally recognized overnight courier service, addressed by name and to the party or person intended as follows:

To the City:	Attn. City Clerk City of La Crosse 400 La Crosse Street La Crosse, WI 54601	Copy to:	Attn. City Attorney City of La Crosse 400 La Crosse Street La Crosse, WI 54601

Contracting Party shall identify in writing and provide to La Crosse the contact person and address for notices under this Agreement.

34. Intentionally omitted.

35. ACCESS TO RECORDS. Contracting Party, at its sole expense, shall maintain books, records, documents and other evidence pertinent to this Agreement in accordance with accepted applicable professional practices. La Crosse, or any of its duly authorized representatives, shall have access, at no cost to La Crosse, to such books, records, documents, papers or any records, including electronic, of Contracting Party which are pertinent to the hourly rates of pay and reimbursable costs under this Agreement, for the purpose of making audits, examinations, excerpts and transcriptions. Once deliverables are provided to La Crosse, additional copies will be provided for a fee.

36. PUBLIC RECORDS LAW. Contracting Party understands and acknowledges that La Crosse is subject to the Public Records Law of the State of Wisconsin. As such, Contracting Party agrees to retain all records as defined by Wisconsin Statute § 19.32(2) applicable to this Agreement for a period of not less than seven (7) years after the termination or expiration of this Agreement. Contracting Party agrees to assist La Crosse in complying with any public records request that La Crosse receives pertaining to this Agreement. If the requested record is not within that which is required to be produced by statute or other authority, then Contracting Party may object, and La Crosse will reject the request. Contracting Party shall seek to intervene in any subsequent public records lawsuit, writ of mandamus, or other action against La Crosse seeking to compel disclosure in order to dispute disclosure of the requested record. Contracting Party shall also cooperate and provide assistance to La Crosse, at no cost, in the defense of such lawsuit, writ or other action. If the request is upheld by a court of law, then Contracting Party will produce the records or indemnify and hold harmless La Crosse Indemnitees from any liability, including without limitation, attorney fees related to or in any way arising from Contracting Party's actions or omissions which contribute to La Crosse's inability to comply with the Public Records Law. In the event that Contracting Party decides not to retain its records for a period of seven (7) years, then it shall provide written

notice to La Crosse whereupon La Crosse shall take custody of said records assuming such records are not already maintained by La Crosse. This provision shall survive the termination of this Agreement.

37. CONSTRUCTION. This Agreement shall be construed without regard to any presumption or rule requiring construction against the party causing such instrument to be drafted. This agreement shall be deemed to have been drafted by the parties of equal bargaining strength. The captions appearing at the first of each numbered section of this Agreement are inserted and included solely for convenience but shall never be considered or given any effect in construing this Agreement with the duties, obligations, or liabilities of the respective hereto or in ascertaining intent, if any questions of intent should arise. All terms and words used in this Agreement, whether singular or plural and regardless of the gender thereof, shall be deemed to include any other number and any other gender as the context may require.

38. NO THIRD-PARTY BENEFICIARY. Nothing contained in this Agreement, nor the performance of the parties hereunder, is intended to benefit, nor shall inure to the benefit of, any third party.

39. COMPLIANCE WITH LAW. The parties shall comply in all material respects with applicable federal, state and local laws, regulations and ordinances.

40. FORCE MAJEURE. Neither Party shall be responsible for any resulting losses and it shall not be a default hereunder if the fulfillment of any of the terms of this Agreement is delayed or prevented by revolutions or other civil disorders, wars, acts of enemies, strikes, fires, floods, acts of God, adverse weather conditions, legally required environmental remedial actions, industry-wide shortage of materials, or by any other cause not within the control of the party whose performance was interfered with, and which exercise of reasonable diligence, such party is unable to prevent, whether of the class of causes hereinabove enumerated or not, and the time for performance shall be extended by the period of delay occasioned by any such cause.

41. GOOD STANDING. Contracting Party affirms that it is a company duly formed and validly existing and in good standing under the laws of the State of Wisconsin and has the power and all necessary licenses, permits and franchises to own its assets and properties and to carry on its business. Contracting Party is duly licensed or qualified to do business and is in good standing in the State of Wisconsin and in all other jurisdictions in which failure to do so would have a material adverse effect on its business or financial condition.

42. AUTHORITY. The persons signing this Agreement warrant that they have the authority to sign as, or on behalf of, the party for whom they are signing.

43. EXECUTION OF AGREEMENT. Contracting Party shall sign and execute this Agreement on or before sixty (60) days of its approval by the La Crosse Common Council, and Contracting Party's failure to do so will render the approval of the Agreement by the La Crosse Common Council null and void unless otherwise authorized.

44. COUNTERPARTS. This Agreement may be executed in one or more counterparts, all of which shall be considered but one and the same agreements and shall become effective when one or more counterparts have been signed by each of the parties and delivered to the other party.

45. SURVIVAL. All express representations, indemnifications and limitations of liability included in this Agreement will survive its completion or termination.

46. COMPLIANCE WITH LAW. Contracting Party agrees to abide by applicable federal, state and local laws, regulations and ordinances, and all provisions of this Agreement.

47. RELIANCE. Contracting Party has the right to reasonably rely on information provided by or through La Crosse.

Revised:
06.21.19

City of La Crosse, Wisconsin

City Hall
400 La Crosse Street
La Crosse, WI 54601

Text File

File Number: 25-1046

Agenda Date: 9/2/2025 **Version:** 1 **Status:** Agenda Ready

In Control: Board of Public Works **File Type:** General Item

INDUSTRIAL WASTEWATER DISCHARGE PERMIT

In accordance with the provisions of chapter NR 211 Wisconsin Administration Code (Department of Natural Resources general pretreatment requirements), Federal pretreatment regulations 40 CFR 403, and Chapter 46 Article III Division 2 of the Municipal Code of Ordinances of the City of La Crosse (hereinafter, City Ordinance Chapter 46)

Trane, U.S.
Plant 4
2213 20th Street South
La Crosse, WI 54601

Is hereby authorized to discharge industrial wastewater from the above identified facility into the La Crosse Wastewater Treatment System pursuant to the effluent limitations, monitoring requirements, and other conditions set forth in this permit.
Compliance with this permit does not relieve the permittee of its obligation to comply with any or all applicable pretreatment regulations, standards, or requirements under Local, State, and Federal laws; including any such regulations, standards, requirements, or laws that may become effective during the term of this permit.

Non-compliance with any term or condition of this permit constitutes a violation of City Ordinance Chapter 46. This permit is issued to the specific user identified above and shall not be reassigned, transferred, or sold to another user or to a different address.

The terms and conditions of this permit may be amended during the life of this permit, as limitations or requirements identified in City Ordinance Chapter 46 are modified or changed.

This permit shall become effective on the date of signature and shall expire at midnight, February 19, 2029

The permittee shall not discharge after the date of expiration. If the permittee wishes to continue to discharge after the expiration date, the permittee shall file for reissuance of this permit in accordance with the requirements of City Ordinance Chapter 46, at least 90 days prior to the expiration date.

La Crosse Wastewater Treatment Facility

By _____
Jared Greeno (Superintendent)

Dated This _____ Day of _____, Year _____

PART 1 - SPECIFIC APPLICABLE EFFLUENT LIMITATIONS

Based on the standards identified in **Table 1,** of this permit, the applicable effluent limitations for this regulated discharge point are as follows:

Section 1 A review of current wastewater data indicates that the technology employed to remove metals from process waste, that Trane Technologies will be unable to consistently comply with the standards established in City Ordinance Chapter 46. Trane Technologies will be allocated the limits below.

PLANT #4 (4PTF) discharge point is located inside Plant 4, on East Avenue and Townsend Street. All regulated waters are discharged through this location.

Table 1

Parameter	**Daily Maximum Concentration**	**Monthly Average Concentration**	**Regulatory Source**
	(mg/L)	(mg/L)	Local (L) / Federal (F)
Cadmium	0.69	0.26	F
Chromium	2.77	1.71	F
Copper	2.07	2.07	L/F
Lead	0.60	0.43	L/F
Nickel	3.98	2.38	L/F
Silver	0.43	0.24	F
Zinc	2.61	1.48	F
Cyanide	0.66	0.65	L/F
TTO (1)	2.13	N/A	F
COD	6,000	N/A	L
FOG	200	N/A	L
TSS	325	N/A	L
pH	6.0-11.0 s.u.	N/A	L
Total Phosphorus	75	N/A	L

(1) Total Toxic Organics (TTO) is equal to the sum of all concentrations over 0.01 mg/L for the compounds listed in 40 CFR PART 433.11 (e). Only industries with approved toxic organics management plans will be allowed to sign the toxic organics certification at the end of this permit. Industries without approved toxic organics management plans must sample for TTO's.

PART 2 - MONITORING AND REPORTING REQUIREMENTS

Section 1- Monitoring Requirements City Ordinance Chapter 46

A. Start Sampling: Beginning as of the date of signature of this permit and thereafter, the permittee shall self-monitor wastewater discharges subject to regulation under PART 1 of this permit to ascertain compliance with the applicable limitations.

B. Sampling/Flow Requirements: The required self-monitoring shall consist both of sampling and flow monitoring of the regulated wastewaters for those pollutants as listed under PART 1 of this permit and reporting of the results to the La Crosse Wastewater Utility. Sampling shall be done during a period of usual and/or normal operation. Totalize flow during the sampling event. Report said flow with Quarterly Compliance Reports

C. Sample Location: PLANT 4, which is located at East Avenue and Townsend Street. 4PTF is at the discharge of the Plant 4 pretreatment unit at the south end of Plant 4. Samples are taken from the Final Effluent Tank of pretreatment unit.

Parameters	**Sample Type**	**Frequency**
Cadmium, Chromium, Copper, Lead, Nickel, Silver, Zinc	Composite	Annually
Cyanide	Grab	Annually
Parameters	**Sample Type**	**Frequency**
COD, TSS and Total Phosphorus	Composite	Four (4) times per year (Once per quarter)
FOG, pH	Grab	Four (4) times per year (Once per quarter)

PART 2 - MONITORING AND REPORTING REQUIREMENTS CONTINUED

Section 2 - General Reporting Requirements City Ordinance Chapter 46

A. Report Due Date: Self- Monitoring results obtained during the following periods shall be reported as follows:

Period	Report By
January 1" to March 31"	April 15th *
April 1st to June 30th	July 15th *
July 1" to September 30th	October 15th *
October 1' to December 31'	January 15th *

* If no self-monitoring is required during a specific period, report "No samples required this period", on periodic compliance form, and send report prior to scheduled due date(s) above.

B. Report Form: The Wisconsin Department of Natural Resources (Wastewater Pretreatment Program Periodic Compliance Report) report form will be acceptable for these results.

C. Data Reporting Requirements: All monitoring results of all effluent samples taken and analyzed, using approved EPA test methods shall be submitted and reported with required self-monitoring reports (samples taken strictly for in-process control are exempt). Samples taken of a wastestream solely for the purpose of obtaining information about pollutant content would be included.

D. Special Conditions: If this industry has chemical, mixing, storage, dilution, or rinse tanks, etc., which are periodically dumped, a logbook showing at a minimum: the date, time (start-finish), quantity, and pH of the dump, shall be maintained for pretreatment inspection purposes.

E. Slug Control Plan: A specific slug control plan is required and is on file at the Wastewater Utility.

F. Report Signature: All monitoring reports shall be signed and validated by a principle executive officer or designee (see signatory requirements in PART 4, Section 13 of this permit).

G. Solvent Management Plan: A specific solvent management plan is required and is on file at the Wastewater Utility.

PART 2 - MONITORING AND REPORTING REQUIREMENTS

CONTINUED Section 2 - Other Reports

A. Non-compliance

If Industry self-monitoring or City compliance monitoring (sampling done by The City) reveals a violation of any discharge limitations specified herein, the industry shall report said violation to the City of La Crosse POTW within 24 hours of becoming aware of the violation. The City POTW will notify permittee of any compliance sampling violations. The industry shall repeat the sampling (within 21 days) until two (2) consecutive samples show that the non-compliance has been corrected. Additionally, a written report indicating the results of any required repeat sampling episodes and analysis shall be submitted within 30 days of becoming aware of the initial violation. Additional monitoring episodes due to non-compliance will not be counted in fulfilling the obligation of required sampling.

B. Accidental Discharge - City Ordinance Chapter 46 Article III Div. 2 Sec.46-112

If, for any reason, the permittee discharges prohibited substances caused by spills, slugs, accidental discharges, etc., the permittee shall immediately notify personnel at the La Crosse Wastewater Treatment Plant at **(608) 780-3554.**

The permittee shall identify the time of discharge, the type of substance, the quantity, the corrective action being taken, and the phone number of the person in charge of remedial action.

A written report shall be mailed to the Industrial Pretreatment Section within five (5) days of the occurrence, detailing the reasons for, and makeup of, the offending discharge and the permittee's remedial efforts, and what measures will be taken to ensure that the spill, slug, or accidental discharge will not be repeated in the future.

PART 3 - GENERAL PROHIBITED DISCHARGE STANDARDS

Section 1 - City of La Crosse Pretreatment Standards

No person shall discharge or deposit or allow to be discharged or deposited into the wastewater treatment system any wastewater which violates the prohibited discharge standards found in City Ordinance Chapter 46 Article III Division 2 46-109 (2) and briefly described as follows:

A. .....Wastewater ...which has a closed cup flashpoint of less than 60 degrees Centigrade or 140 degrees Fahrenheit using test methods specified in 40 CFR 261.21.

B. Solid or viscous wastes or wastes that may become solid or viscous in the sewer and may interfere with the natural flow in a sewer or make excessive sewer cleaning necessary ....

C. Garbage that has not been ground or reduced in size to such a degree that all particles are less than one-half (1/2") in any dimension.....

D. Noxious or malodorous liquids, solids, or gases

E. Waste which may cause corrosion or deterioration of the wastewater treatment system. All wastes discharged into the wastewater treatment system shall have a pH value in the range of six (6) to nine (9) Standard Units at the point of introduction into the wastewater treatment system ....

F. Fat, wax, oil, or greases ..... which may solidify or become viscous at temperatures between 0 and 65 degrees Celsius, or 32- and 149-degrees Fahrenheit...

G. .....Radioactive wastes or isotopes .....

H. Substances not removable by the wastewater treatment process which will cause discoloration, opacity, or foaming of the wastewater treatment plant effluent or residues.

I..... In no case shall wastewater with a temperature exceeding 40 degrees Celsius or 104 degrees Fahrenheit be introduced into the wastewater

J. Unpolluted water including, but not limited to, non-contact cooling water, rainwater, river water, or groundwater which will increase the hydraulic loading on the wastewater treatment system ....

K. Slug loads causing interference with wastewater treatment system or adversely affects .... residues, sludges, or scum.

PART 3 - GENERAL PROHIBITED DISCHARGE STANDARDS CONTINUED

L. Wastewater discharges, except as authorized by the Board of Public Works, in mass discharge quantities or concentrations exceeding the following:

Pollutant Parameter	Limitation
Biochemical Oxygen Demand (BOD)	350 mg/L
Chemical Oxygen Demand (COD)	500 mg/L
Total Suspended Solids (TSS)	325 mg/L
Fats, Waxes, Oil. & Grease (FOG)	100 mg/L
Phosphorus (P)	7mg/L
Ammonia (NH3)	40mg/L

M. Wastewater containing toxic pollutants.

N. Solids, solids, or gases which may cause the Wastewater Treatment Plant effluent or treatment residues, sludges, or scum to be unsuitable for reclamation or disposal or interfere with the reclamation or disposal process or processes ordinarily employed, including causing a reduction in the allowable land application rate or allowable land application site life by more than ten percent (10%).

0. Liquids, solids, or gases which are likely to cause the Wastewater Treatment Plant to violate WPDES standards.

P. Any trucked or hauled pollutant, except at discharge points designated by the POTW.

Q. Process wastewater containing pollutants exceeding the following concentrations as established on a continuous twenty-four (24) hour flow proportional basis or lesser period if process wastewater is discharged for less than twenty-four (24) hours in an average day of operation:

LIMITS

Pollutant Parameter	Max. mg/L
Arsenic	0.45
Cadmium	0.69
Chromium	2.77
Copper	2.07
Cyanide	0.66
Lead	0.60
Mercury	0.0002
Nickel	1.91
Zinc	2.61

PART 3- GENERAL PROHIBITED DISCHARGE STANDARDS CONTINUED

Section 2 - Other Conditions City Ordinance Chapter 46

In addition to the general prohibited discharge standards established in City Ordinance 46, no person shall discharge or cause to be discharged or deposited any wastewaters or effluent which does not conform to pretreatment standards established by the Environmental Protection Agency or the Wisconsin Department of Natural Resources. Pretreatment limits shall minimally include applicable national categorical pretreatment standards for new and existing sources set out in 40 CFR, subchapter n, PARTS 401 through 471 inclusive. Wastewater, or effluent including domestic, commercial, and industrial waste, shall not contain any substance which is in violation of any State, Federal, or Local pretreatment or other discharge standard.

A. Concentration and mass limits for categorical users - the control authority may, for ease of operation, convert mass limits to concentration limits. The applicable federal or state regulations will apply.

Section 3 - EPA Categorical Pretreatment Standards

The permittee identified on page 1 of this permit discharges certain wastewaters which are also subject to regulation by the following EPA categorical pretreatment standard(s).40 CFR, PART 433, Metal finishing point source category. Effective as of February 15, 1986, Metal Finishing category pretreatment standards have superseded the Electroplating category standards Trane Company production facilities are subject to these standards. In addition, the City of La Crosse has developed local limits which may be applicable. In case of conflict, the most stringent limitation shall apply.

METAL FINISHING STANDARDS:

Pollutant	Maximum for any 1 day (mg/L)	Monthly Average shall not exceed* (mg/L)
Cadmium (T)	0.69	0.26
Chromium (T)	2.77	1.71
Copper (T)	3.38	2.07
Lead (T)	0.69	0.43
Nickel (T)	3.98	2.38
Silver (T)	0.43	0.24
Zinc (T)	2.61	1.48
Cyanide (T)	1.20	0.65
TTO	2.13	---

If only one (1) sample is taken during a month, the results of that sample become the monthly average,

PART 4 - GENERAL CONDITIONS

In addition to compliance with PARTS 1, 2, and 3, this permit is issued conditioned upon compliance with the following general conditions.

Section 1 - Fees - City Ordinance Chapter 46 Article III Div. 2 Sec. 46-110

(g) The permittee shall pay annual fees based on the following:

A. Annual Administrative: Unit Cost x Fee Units

B. Monitoring Charge: Personnel and equipment charges for scheduled City compliance monitoring are included in the administrative costs.

C. Laboratory Analysis Charges: Analysis charges for samples collected for compliance monitoring will be billed to the industry for the constituents analyzed by the contract laboratory.

D. Extraordinary Charges: Any extraordinary charges incurred resulting from non-compliance will be billed separately to the industry.

Section 2 - Admission to Property - City Ordinance Chapter 46 Article III Div.2 Sec. 46-112 (g)

Whenever it shall be necessary for the purposes of this permit, the board, or its duly appointed representatives, upon presentation of credentials, may enter upon any property or premises of the permittee at reasonable times, either scheduled or unscheduled.

Section 3 - Modification or Revision - City Ordinance Chapter 46 Article III Div. 2 Sec. 46-116

The terms and conditions of this permit are subject to change during the life of the permit as provided in City Ordinance Chapter 46.

Section 4 - Severability or Conflict - City Ordinance Chapter 1 1 Sec. 1-8

The provisions of this permit are severable, and if any provision of this permit, or the application of any provision of this permit to any circumstance, is held invalid, the application of such provision to other circumstances, and the remainder of this permit, shall not be affected

PART 4 - GENERAL CONDITIONS CONTINUED

Section 5 - Notice of Intent - City Ordinance Chapter 46 Article III Div. 2 Sec. 46-110 (d) The permittee shall apply for permit modification prior to the introduction of any changed wastewater into the La Crosse Wastewater Treatment System. In addition, according to 40 CFR 403.12 (j) the permittee shall promptly notify the POTW in advance of any substantial change in the volume or character of pollutants in their discharge, including the listed or characteristic hazardous wastes for which the permittee has submitted initial notification under 40 CFR 403.12 (p).

Section 6 - Enforcement, Appeal & Penalties - City Ordinance Chapter 46 Article III Div. 2 Sec. 46-108

Any permittee who has violated or is in violation of a City discharge permit, or who willfully or negligently fails to comply with any provisions of a City discharge permit, or who knowingly makes any false statement, representation or certification, or who falsifies, tampers with, or knowingly renders inaccurate any monitoring device or method, shall be subject to the enforcement provisions of City Ordinance Chapter 46 including termination, fines and/or civil penalties.

Section 7 - Disposal of Pretreatment Sludges or Other Residues

The disposal of sludges or residues generated through pretreatment or operation shall be in accordance with section 405 of the Clean Water Act and subtitles c and d of the Resource Conservation and Recovery Act (RCRA).

Section 8 - Confidentiality - City Ordinance Chapter 46ticle III Div. 2 Sec. 46-115

Except for information determined to be confidential in City ordinance 6.11, all reports required by this permit shall be available for public inspection at the Wastewater Treatment Plant, Isle La Plume, under the supervision of pretreatment personnel.

Section 9 - Records Retention - City Ordinance Chapter 46 article III Div.2 Sec. 46-111 (b)AP

The permittee shall retain and preserve for no less than seven (7) years any records, books, documents, memoranda, reports, correspondence, and all summaries thereof, relating to monitoring, sampling, and chemical analysis made by or on behalf of a permittee in connection with the permittee's discharge. In addition, the permittee shall adhere to all other stipulations made under City Ordinance Chapter 46

PART 4 - GENERAL CONDITIONS CONTINUED

Section 10 - Dilution - City Ordinance Chapter 46 Article III Div. 2 Sec. 46-112 (f)

The permittee shall not increase the use of potable or process water in any way, nor mix separate waste streams for the purpose of diluting a discharge as a partial or complete substitute for adequate treatment to achieve compliance with the standards set forth in this permit.

Section 11 - Bypass 40 CFR 403.17

The permittee shall not intentionally divert any wastestream from any portion of the permittee's pretreatment facility. There are certain conditions where a bypass may be unavoidable; these conditions are set forth in 40 CFR 403.17. The control authority may approve an anticipated bypass after considering its adverse effects.

Section 12 - Discharge of Hazardous Waste 40 CFR 403.12 (p)

The permittee shall notify the POTW, the EPA regional waste management division director, and state hazardous waste authorities in writing of any discharge into the POTW of a substance, which, if otherwise disposed would be a hazardous waste under 40 CFR Part 261. The notification shall be in accordance with 40 CFR403.12 (p).

Section 13 — Signatory Requirements

All reports required by this permit shall be signed by a responsible corporate officer of the permittee, or designee, as outlined in 40 CFR, 403.12 (1) and amendments thereto, written authorization for the designee (position or individual) shall be properly signed and on file at the La Crosse Wastewater Treatment Facility, Industrial Pretreatment Section, prior to or simultaneous with submission of the required reports. All required reports shall include the following certifications.

.

TOXIC ORGANICS CERTIFICATION

Based on my inquiry of the person or persons directly responsible for managing compliance with the pretreatment standard for TTO, I certify that to my knowledge and belief, no discharge of concentrated toxic organics into the wastewaters has occurred since filing the last discharge monitoring report. I further certify that this facility is implementing the solvent management plan submitted to the City Wastewater Utility.

REPORT CONTENT CERTIFICATION

I further certify under penalty of law that this document and all attachments were prepared under my direction or supervision in accordance with a system designed to assure that qualified personnel properly gather and evaluate the information submitted. Based on my inquiry of the person or persons who manage the system, or those persons directly responsible for gathering the information, the information submitted is, to the best of my knowledge and belief, true, accurate, and complete including the possibility of fine and imprisonment for knowing violations. I am aware that there are significant penalties for submitting false information,

Reduced Sampling Requirements Certification

Based on my inquiry of the person or persons directly responsible for managing compliance with the applicable pretreatment standards, I certify that, to the best of my knowledge and belief, there has been no increase in the level of Cd,Cr,Cu,Pb,Ag,Zn,CN in the wastewaters due to the activities at the facility since filing of the last periodic report.

BY _____

TITLE _____

DATE _____

Reporting Address:
La Crosse Wastewater Utility
Industrial Pretreatment Section
905 Joseph Houska Drive
La Crosse WI 54601

Telephone No. (608) 789-7343

City of La Crosse, Wisconsin

City Hall
400 La Crosse Street
La Crosse, WI 54601

Text File

File Number: 25-1047

Agenda Date: 9/2/2025 **Version:** 1 **Status:** Agenda Ready

In Control: Board of Public Works **File Type:** General Item

Agenda Number:

PUBLIC RIGHT OF WAY POLICY FOR OKTOBERFEST PARADE

In order that the greatest number of people may enjoy the annual Oktoberfest parade and to avoid injuries, no person shall place obstructions such as couches, chairs, or other items on the public boulevards, public sidewalks or public right-of-way sooner than 12:00 midnight prior to the parade. All such items must be removed immediately following the parade. The parking of cars, trucks, flatbeds, trailers, campers or any vehicle of any type and placing of stakes and ropes on the public sidewalks, boulevard or right-of-way is prohibited at all times.

Persons violating this policy may be subject to a $124.00 forfeiture pursuant to Section 40-6 of the City of La Crosse Municipal Code and loss of property plus cost of removal.

CITY OF LA CROSSE
BOARD OF PUBLIC WORKS

Publish as 2 column display
September 18, 2025
1 Affidavit

CITY CLERK'S OFFICE

400 La Crosse Street
La Crosse, Wisconsin 54601
(608) 789-7510
cityclerk@cityoflacrosse.org
www.cityoflacrosse.org

MEMORANDUM

To: Board of Public Works

From: Sondra Craig, Deputy City Clerk

Date: September 2, 2025

Re: Public right-of-way policy for Oktoberfest Parades – BPW File 25-1047

At the direction of the Board of Public Works (sometime in the early 1990s), the City Clerk's office has been tasked with publishing a notice in the Tribune regarding the city's right-of-way policy for the Oktoberfest parades. The draft notice is placed on the BPW agenda for the Board's review and approval prior to printing in the Tribune.

Attached to the file is the notice that will be published in the Tribune one week prior to the Torchlight parade.

Sondra Craig, Deputy City Clerk

City of La Crosse, Wisconsin

City Hall
400 La Crosse Street
La Crosse, WI 54601

Text File

File Number: 25-1048

Agenda Date: 9/2/2025 **Version:** 1 **Status:** Agenda Ready

In Control: Board of Public Works **File Type:** General Item

BRIGHTSPEED LA CROSSE

LCRSWIXC
1503 RANGER DR, LA CROSSE, WI 54603
CONDUIT LAYOUT

Sheet List Table

Sheet Number	Sheet Title
01	COVER SHEET
02	GENERAL NOTES
03	LEGENDS
04	TYPICAL
05	FIBER LAYOUT

Material List Table

ITEM	QUANTITY
FEEDER FIBER	00
JUMPER	00
17"X30"X18" HH	00
12"X24"X18" HH	00
24"X36"X24" HH	00
2" CONDUIT	96'
NEW STRAND	00
ANCHOR	00

BLM INFO

SECTION	S20
MUNICIPALITY	LA CROSSE
TOWNSHIP	T16N
COUNTY	LA CROSSE
RANGE	R7W

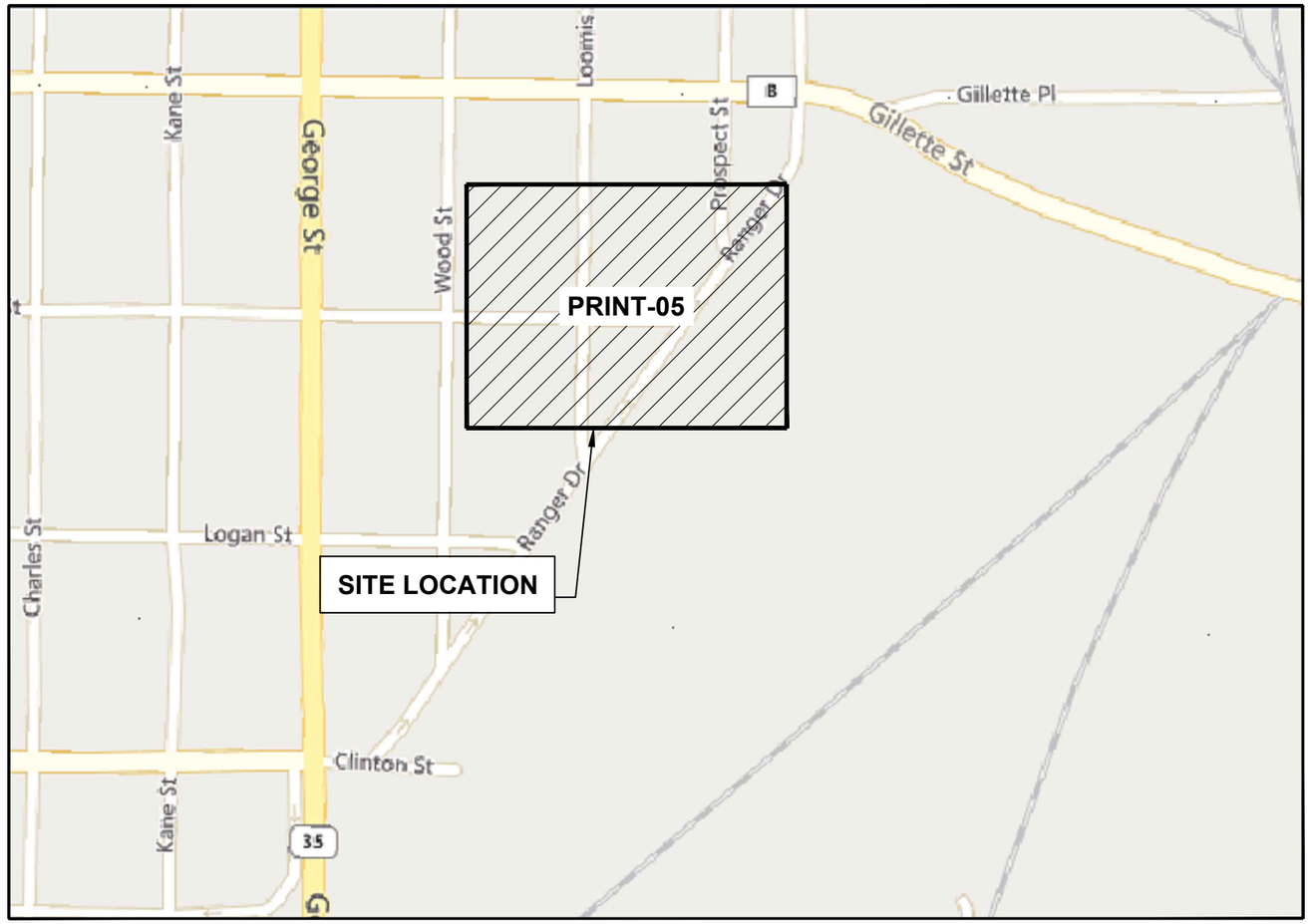

GENERAL ABBREVIATIONS

R/W	RIGHT OF WAY
S/W	SIDEWALK
C/L	CENTER LINE
CSW	CONCRETE SIDEWALK
DWY	DRIVEWAY
FOC	FACE OF CURB
BOC	BACK OF CURB
EOC	EDGE OF CURB
EOP	EDGE OF PAVEMENT
ETW	ETW LINE
HH	HANDHOLE
MH	MANHOLE
N.T.S.	NOT TO SCALE
CONC	CONCRETE
PED	PEDESTAL (UTILITY)
PVC	POLYVINYL CHLORIDE
P/L	PROPERTY LINE
RR	RAILROAD
SL	STREET LIGHT
W-BLDG	WALL TO BUILDING
W-P	WALL TO POLE
W-W	WALL TO WALL
U/E	UTILITY EASEMENT
SD	STORM DRAIN
TS	TRAFFIC SIGNAL

REVISION	DATE	DESCRIPTION

PERMITTING AGENCY
CITY OF LA CROSSE

LINEAR PATH FOOTAGE
UNDERGROUND PATH - 96 FT

N

811 Know what's below. Call before you dig.

CHC A CONGRUEX COMPANY
9095 Rio San Diego Dr., Suite 450,
San Diego, CA 92108

brightspeed

LCRSWIXC

COVER SHEET

GENERAL NOTES

PLAN SHEET DISCLAIMER:

1. EVERY REASONABLE EFFORT HAS BEEN MADE TO ASSURE THE ACCURACY OF THESE PLANS AND ASSOCIATED DATA.
2. IN AN EFFORT TO INCREASE THE CLARITY AND LEGIBILITY OF THE PLANS, EXISTING UNDERGROUND UTILITIES WILL NOT BE SHOWN UNLESS THERE IS PROPOSED WORK THAT WILL REQUIRE EXCAVATION OR ANY OTHER EARTH DISTURBING ACTIVITY. IF PROPOSED WORK WILL REQUIRE THIS TYPE OF ACTIVITY. EXISTING UNDERGROUND UTILITIES WILL BE PROPERLY INVESTIGATED AND REPRESENTED ON THE PLAN SHEET OF THE RESPECTIVE WORK LOCATION

UTILITIES

1. THE IDENTITY AND LOCATION OF EXISTING UNDERGROUND UTILITIES LOCATED IN AND AROUND THE CONSTRUCTION AREA HAVE BEEN SHOWN AND LABELED ON THE PLANS BY USING INFORMATION PROVIDED BY THE RESPECTIVE UTILITY OWNERS.
2. SUPPORT AND PROTECTION OF ALL UTILITIES AND APPURTENANCES SHALL BE THE RESPONSIBILITY OF THE CONTRACTOR. COSTS FOR THE REPAIR AND RESTORATION OF EXISTING UTILITIES DAMAGED BY THE CONTRACTOR SHALL BE THE RESPONSIBILITY OF THE CONTRACTOR
3. CALL 811 BEFORE YOU DIG. AT LEAST 48 HOURS PRIOR TO EXCAVATION.

WORK LIMITS

1. THE WORK LIMITS SHOWN ON THESE PLANS ARE FOR PHYSICAL CONSTRUCTION ONLY. THE INSTALLATION AND OPERATION OF ALL TEMPORARY TRAFFIC CONTROL AND TEMPORARY TRAFFIC CONTROL DEVICES REQUIRED BY THESE PLANS SHALL BE PROVIDED BY THE CONTRACTOR WHETHER INSIDE OR OUTSIDE OF THESE WORK LIMITS.

MAINTAIN DRAINAGE

1. THE CONTRACTOR AT HIS OWN EXPENSE, SHALL MAINTAIN THE FLOW IN ALL SEWERS, DRAINS, FIELD TILES, AND WATERCOURSES ENCOUNTERED IN AND AROUND THE PROJECT SITE. IF SUCH WATERCOURSES OR DRAINS ARE DISTURBED OR DESTROYED DURING THE EXECUTION OF THE PROJECT, THEY SHALL BE RESTORED BY THE CONTRACTOR AT HIS OWN EXPENSE TO A CONDITION SATISFACTORY TO THE ENGINEER.

SECURING EXCAVATIONS & TRENCHES FOR NON-WORKING HOURS

1. EXCAVATIONS AND TRENCHES OVER 24-INCHES DEEP SHALL BE SECURELY PLATED OR BACKFILLED DURING NON-WORKING HOURS.

EXCAVATION OF ROADWAY AND RIGHT-OF-WAY AREAS

1. ANY CONTRACTOR PERFORMING EXCAVATION, INCLUDING BUT NOT LIMITED TO DISTURBING THE EARTH WTH POWERED OR NON-POWERED EQUIPMENT, DRILLING AND/OR BORING, SHALL CAUSE NOTICE TO BE GIVEN BY CALLING 811 AT LEAST 48 HOURS BUT NOT MORE THAN 10 WORKING DAYS BEFORE EXCAVATING.
2. THE EXCAVATOR SHALL PROTECT AND PRESERVE THE MARKINGS UNTIL THOSE MARKINGS ARE NO LONGER NEEDED. IF AN EXCAVATION WILL COVER A LARGE AREA AND/OR PROGRESS FROM ONE AREA TO THE NEXT OVER A PERIOD OF TIME. THE EXCAVATOR SHALL COORDINATE THE MARKING OF APPROXIMATE LOCATIONS OF CITY OWNED FACILITIES WITH THE ACTUAL EXCAVATION.
3. THE CONTRACTOR IS RESPONSIBLE FOR LOCATING ALL CUSTOMER OWNED SERVICE LINES/LATERALS. THE CONTRACTOR SHALL FIELD VERIFY THE HORIZONTAL AND VERTICAL LOCATION OF ANY CITY OR CUSTOMER OWNED MAIN OR SERVICE LINE/LATERALS THAT MAY BE AFFECTED BY THE PROPOSED CONSTRUCTION ACTIVITIES. FIELD VERIFICATION SHALL TAKE PLACE PRIOR TO ANY ACTIVITY THAT MAY JEOPARDIZE THE INTEGRITY OF THE FACILITY AND AT A LOCATION NEAREST THE POINT OF POSSIBLE CONFLICT.
4. ANY DAMAGES TO CITY OR CUSTOMER OWNED FACILITIES SHOULD FIRST BE REPORTED TO THE UTILITY OWNER THEN IMMEDIATELY NOTIFY THE PROJECT ENGINEER.

AERIAL CONSTRUCTION:

1. CONTRACTOR TO VERIFY ALL BONDING AND GROUNDING COMPLES WITH NESC GUIDELINES.
2. CONSTRUCTION TO VERIFY ALL REQUIRED MAKE READY WORK IS COMPLETE BEFORE PLACING ON UTILITY POLES.

SAFETY NOTE:

1. CHECK IN WITH CONSTRUCTION SUPERVISOR WHEN ARRIVING ON-SITE.
2. HEAVY CONSTRUCTION EQUIPMENT IN USE. BEWARE OF SURROUNDINGS.
3. FOLLOW CONGRUEX SAFETY POLICIES AND GUIDELINES AT ALL TIMES WHILE WORKING.
4. CONSTRUCTION ZONE/ HARD HAT, SAFETY GLASSES, REFLECTIVE VEST/SHIRT, SAFETY TOE BOOTS REQUIRED – WORK SAFELY

CHC
A CONGRUEX® COMPANY

LEGENDS SHEET

brightspeed
CONFIDENTIAL AND PROPRIETARY
LCRSWIXC

53

EXISTING EQUIPMENTS LEGENDS

- R\W — R/W
- C\L — CENTER LINE
- EOP — EOP
- BOC — BOC
- PROPERTY LINE
- FENCE
- T — TELCO
- E — ELECTRIC
- G — GAS
- TS — TRAFFIC SIGNAL
- W — WATER
- S — SEWER
- SD — STORM DRAIN
- U/E — UTILITY EASEMENT
- RAIL TRACKS
- SIDEWALK
- CABINET
- EXISTING PED
- FP — EXISTING FLOWERPOT
- HH — EXISTING HANDHOLE
- TELEPHONE CABINET
- TELEPHONE MANHOLE
- POLE
- CABLE MARKER
- STREET SIGN
- VERTICAL GROUND
- E — ELECTRIC PEDESTAL/CABINET
- PWR — ELECTRIC TRANSFORMER
- E — ELECTRIC METER
- E — ELECTRIC VAULT/HANDHOLE
- E — ELECTRIC MANHOLE
- V — EXISTING VAULT
- STREETLIGHT
- P — POWER PED
- TV — CATV PED
- TV — CATV VAULT/HANDHOLE
- TREE
- TRANSFORMER
- G — GAS METER
- GV — GAS VALVE
- S — SEWER MANHOLE
- MH — UNKNOWN MANHOLE
- W — WATER METER
- WV — WATER VALVE
- H — FIRE HYDRANT
- WHH — WATER MANHOLE
- STORM DRAIN CATCH BASIN
- SD — STORM DRAIN MANHOLE
- CULVERT
- C/L MONUMENT
- ANCHOR & DOWN GUY

PROPOSED EQUIPMENTS LEGENDS

- BORE — BORE — BORE
- TRENCH
- A — AERIAL FIBER
- AERIAL STRAND
- 12"X24"X18" HANDHOLE
- 17"X30"X18" HANDHOLE
- 24"X36"X24" HANDHOLE
- 36"X48"X30" HANDHOLE
- ANCHOR & DOWN GUY

CHC
A CONGRUEX® COMPANY

TYPICALS SHEET

brightspeed
CONFIDENTIAL AND PROPRIETARY
LCRSWIXC

MINIMUM STANDARDS FOR DIRECTIONAL BORING
STREET CROSSINGS

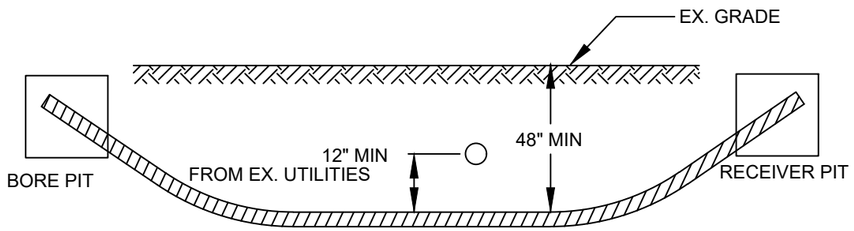

- PLACE END MARKER WITH UTILITY OWNER'S NAME DESCRIBING CONDUIT
- BORE PIT TO BE BACKFILLED AND COMPACTED IN 12" LIFTS WITH MATERIAL REMOVED
- FLOW OF DITCH MUST BE MAINTAINED AT ALL TIMES
- PROTECT ROOTS AT ALL TREE LOCATIONS, SHIFT BORE TRENCH IF NECESSARY

TYPICAL BORE DETAILS 1

MINIMUM STANDARDS FOR DIRECTIONAL BORING
UNDER SIDEWALKS & WITHIN ROW (EXCLUDING STREET CROSSINGS)

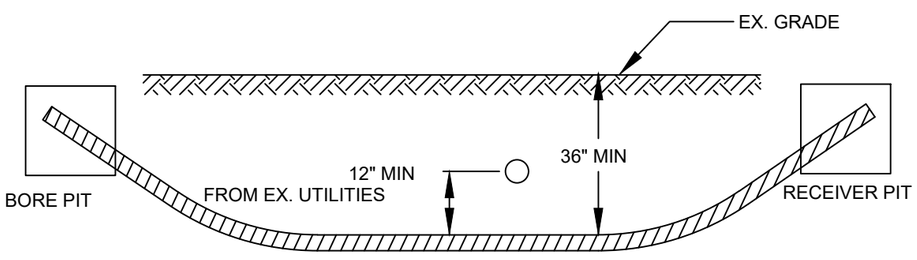

- PLACE END MARKER WITH UTILITY OWNER'S NAME DESCRIBING CONDUIT
- BORE PIT TO BE BACKFILLED AND COMPACTED IN 12" LIFTS WITH MATERIAL REMOVED
- FLOW OF DITCH MUST BE MAINTAINED AT ALL TIMES
- PROTECT ROOTS AT ALL TREE LOCATIONS, SHIFT BORE TRENCH IF NECESSARY

TYPICAL BORE DETAILS 2

PLAN VIEW

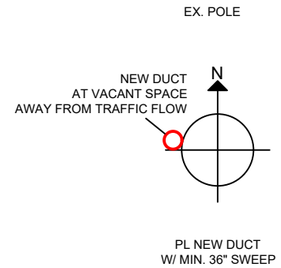

ELEVATION

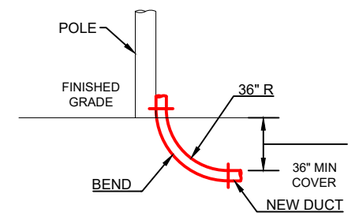

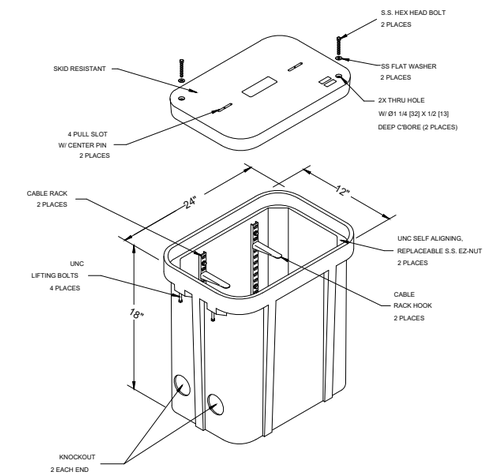

12"x24"x18"
N.T.S.

RISER DETAILS

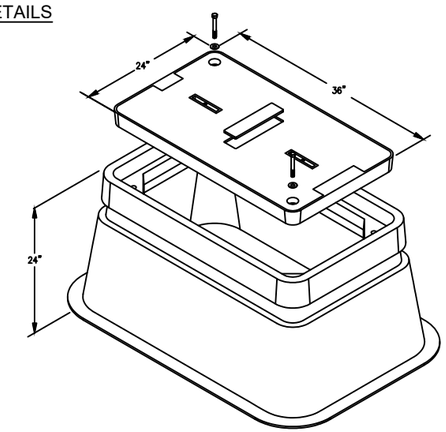

24"x36"x24"
N.T.S.

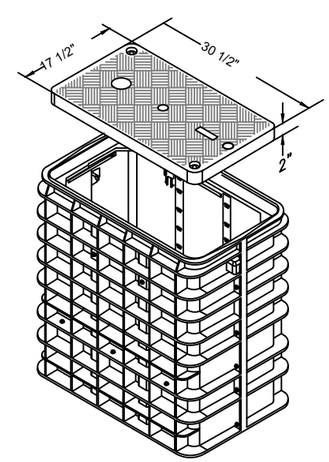

17"x30"x18"
N.T.S.

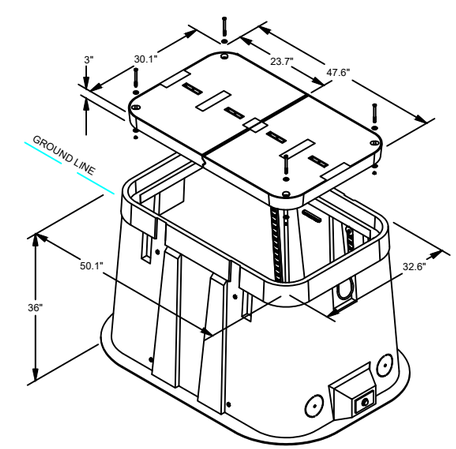

30"x48"x36"
N.T.S.

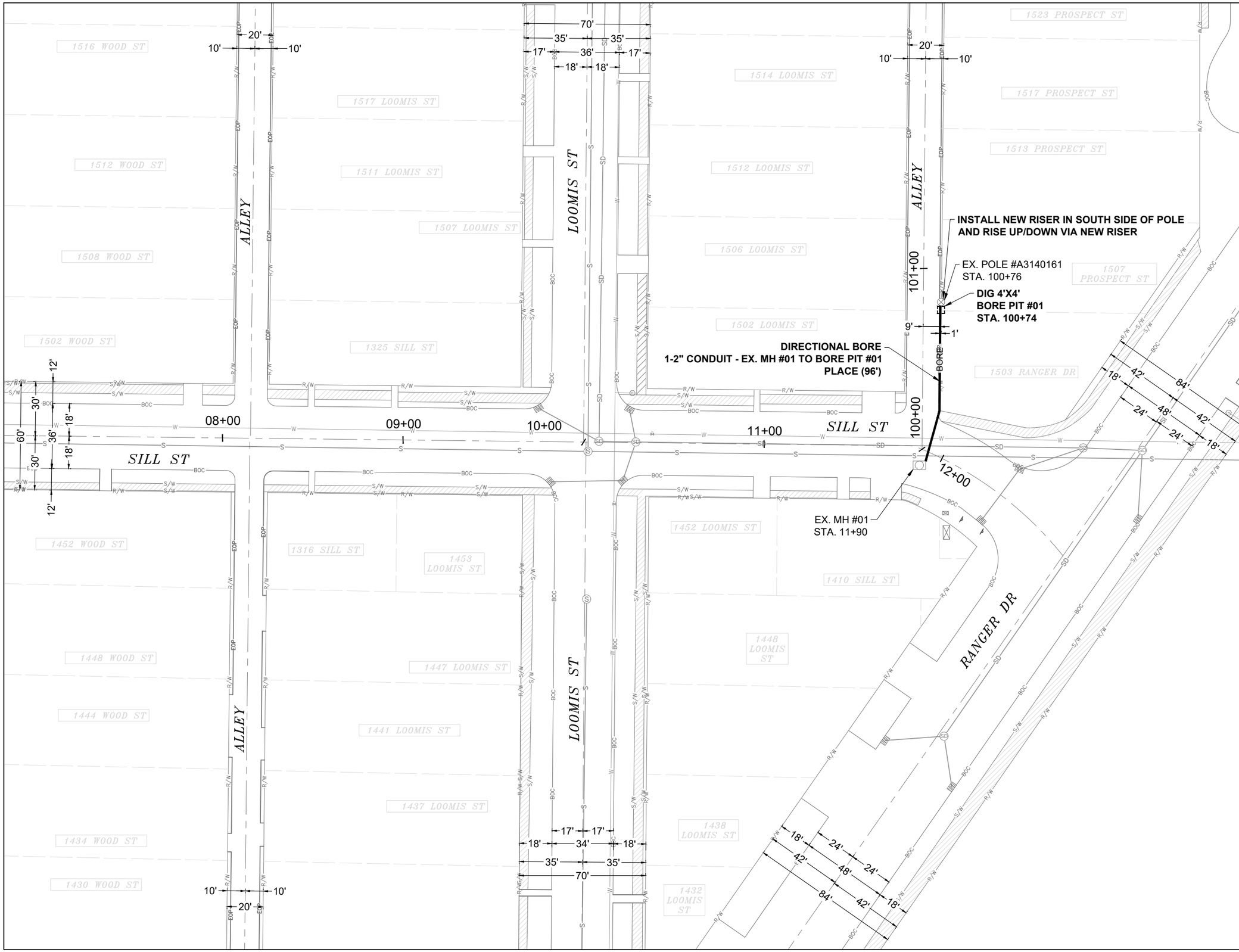

EXCAVATION DATA	
PROPOSED UTILITY	DIRT
(1) 4'X4' BORE PIT	16 SQFT

CALL 811 BEFORE YOU DIG.
WISCONSIN TOLL FREE
800-242-8511

brightspeed

CHC
A CONGRUEX® COMPANY

CONFIDENTIAL AND PROPRIETARY
LCRSWIXC

05 OF 05

SCALE: 1" = 50'

REVOCABLE OCCUPANCY / STREET PRIVILEGE PERMIT APPLICATION FOR COMMUNICATIONS (FIBER OPTICS, TELEPHONE, CABLE, ETC.)

City of La Crosse Engineering Department

Phone: 608-789-7505 Email: engineering@cityoflacrosse.org http://cityoflacrosse.org

Encroachment Owner: CNS Networks LLC on behalf of Brightspeed of Wisconsin, LLC

Address: 1600 Pearl #300 City: Boulder State: CO Zip: 80302

Phone # 972-325-7815 Email Address lbreidt@congruex.com

Application Preparer (if different from above) _____

Relationship with Owner: _____

Phone # _____ Email Address _____

Description of Proposed Encroachment:

Brightspeed proposes to bore and place 96 ft of (1)-2" conduit. ***LCRSWIXC-PMT-029095***

Encroachment Addresses (List by Street and 100 blocks):

1503 RANGER DR, LA CROSSE, WI 54603

I certify that I have reviewed the Municipal Code and understand all that is related to this permit request. I further certify that I have the full authority to make the foregoing application; the information in the application and the required submittals are complete and correct; the Work or Use performed shall comply with all the laws of the State of Wisconsin, and all ordinances, rules, regulations, policies and special conditions of the City of La Crosse. The applicant agrees to perform the work covered by an approved permit with diligence and convenience to the public. **See Sheet 2 of 2 for Additional Conditions.**

Signature of Owner or designee: Lynnsay Breidt Digitally signed by Lynnsay Breidt DN: OU=CHC Consulting, O=Congruex, CN=Lynnsay Breidt, E=lbreidt@congruex.com Reason: I am the author of this document Location: Date: 2025.08.20 12:30:10-05'00' Foxit PDF Editor Version: 2025.2.0 Date: 8/20/25

Print Name and Title: Lynnsay Breidt, Permitting Specialist

Please return this completed application along with required information and fees noted on checklist below to: City of La Crosse, Engineering Department, 400 La Crosse Street, La Crosse, WI 54601. You will then be given notice of when your request will be on the Board of Public Works agenda for consideration. **Average completion time for validation 45 days**.

BELOW THIS LINE TO BE COMPLETED BY CITY STAFF ONLY

Required items to be provided by Applicant:

- Scale Drawing of encroachments (City Utilities, Lighting and Signals must be shown on Proposed Communications Plan) ☐
- Certificate of Insurance (City as additional Insured) ☐
- Initial Application Fee $_____ ☐
- City Utility Potential Conflict Notification and Sign-Off ☐

Board of Public Works Approval Date:
Encroachment Type:
Permit Number:

All Fees are Non-Refundable & Subject to change by City Council

SHEET 1 OF 2

STREET PRIVILEGE PERMIT CONDITIONS FOR COMMUNICATIONS INSTALLATIONS

1. **The applicant shall be primarily liable for damages to person or property by reason of the granting of this street privilege permit.**

2. **The applicant shall obtain an excavation permit from the City of La Crosse Engineering Department prior to performing installation or any maintenance on the cable in the City right-of-way that requires excavation or disruption of pavement, sidewalk, curb and gutter, or other structure.**

3. **The applicant agrees that tracer wires shall be used and final cable location within the street right-of-way shall be approved by the City Engineer. Cable shall be installed not less than 36 inches deep, unless otherwise approved by the City Engineer.**

4. **Applicant agrees to provide the City of La Crosse with final "as-built" plans when installation is complete.**

5. **Applicant agrees that any pavement, concrete or green space disturbed during drilling activities shall be restored to its prior condition.**

6. **Applicant agrees that said installation shall not interfere with the City's water, sanitary sewer, or storm sewer underground infrastructure that may be in the area.**

7. **Applicant further agrees that they will make arrangements with the public utility companies and the City of La Crosse to clear all public underground utilities prior to initiating such work, and if necessary, applicant will make arrangements with the City of La Crosse to ensure proper traffic control.**

8. **Applicant waives any and all rights to contest in any way or manner the validity of Sec. 66.0425 of the Wisconsin Statutes and the amount of compensation charged.**

9. **Applicant agrees to become a member of Diggers Hotline for marking / locating of utility.**

10. **The applicant for a permit to encroach on the public right-of-way shall procure and maintain for the duration of the permit a minimum liability and contractual liability policy in the amount of $100,000.00 each person, $300,000.00 each accident for bodily injury and $100,000.00 for property damage. A certificate of such insurance shall be filed with the City Attorney as part of the application. The insurance shall name the City, its officials, employees and agents as additional insureds. The Board may approve greater insurance protection on a case-by-case basis.**

11. **Applicant further agrees to hold harmless the City for any damage to said cable while the City, its agents or contractors are conducting construction for maintenance activities in or upon such area in which said cable lies; provided, however, the City shall make a good faith effort to notify applicant of any maintenance or work in the area of the street privilege permit which may damage applicant's cable.**

12. **Applicant agrees to remove the cable and return the area to its original condition upon ten (10) days' notice by the Board of Public Works. The applicant further agrees that if it does not remove the cable within ten (10) days after receiving notice, the City is authorized to remove the same and applicant agrees to pay the City for all costs of such removal.**

13. **Applicant further agrees that the obligations and conditions of this street privilege permit shall be binding upon all heirs, successors and assigns of applicant.**

14. **The person(s) signing this Permit warrant that they have the authority to sign as, or on behalf of, the party for whom they are signing.**

BRIGHTSPEED CITY OF LA CROSSE

1503 RANGER DR.
RANGER DR. & SILL ST.
CITY OF LA CROSSE, WI

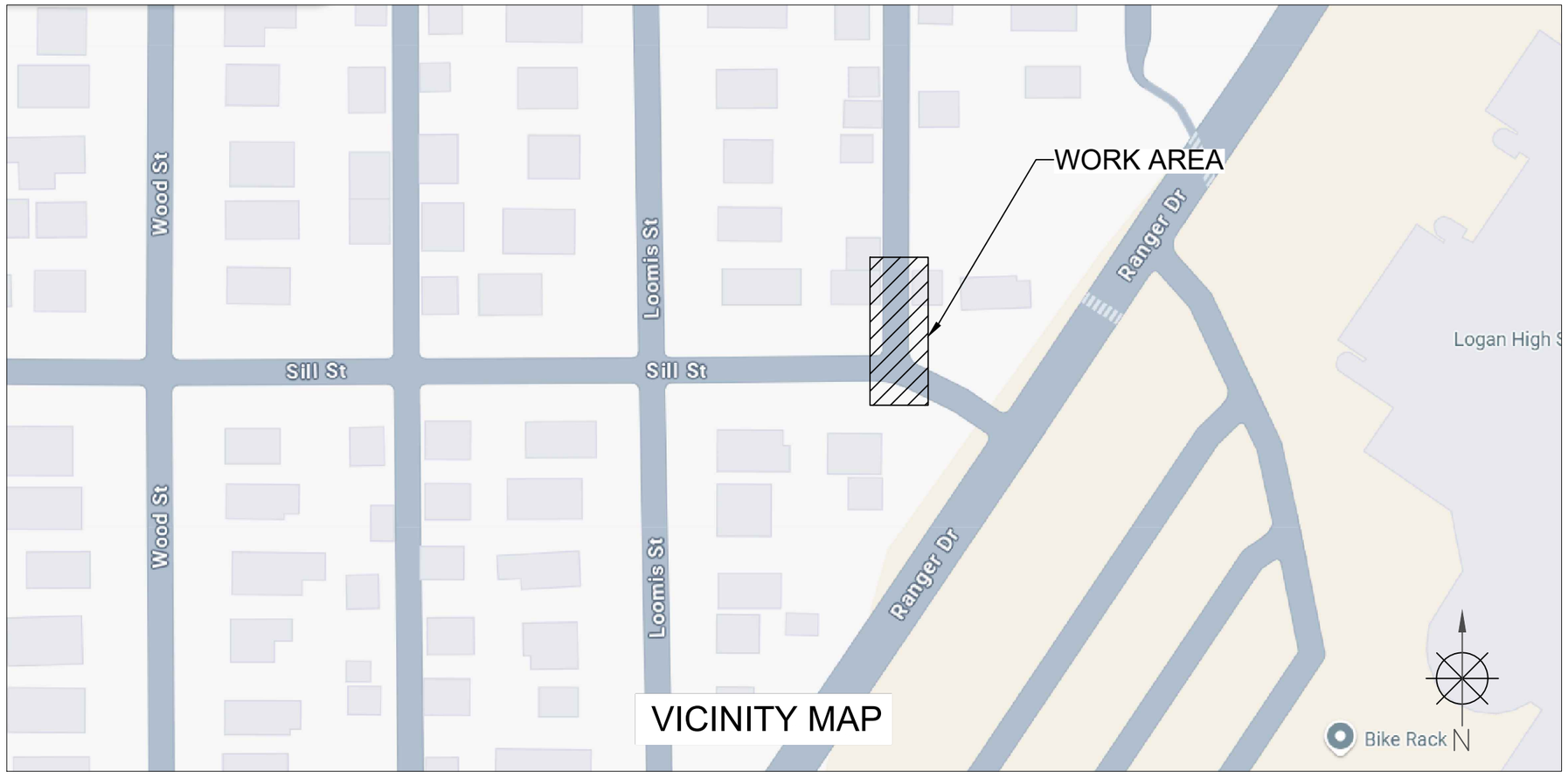

TRAFFIC CONTROL PLAN

SCOPE OF WORK
- RISER PLACEMENT
- BORING

SHEET INDEX	
SHEET	DESCRIPTION
KEYMAP	VICINITY MAP & SCOPE OF WORK
TC-1 TO TC-1	TRAFFIC CONTROL PLAN

PERMITTING AGENCY
CITY OF LA CROSSE

PROPOSED PATH FOOTAGE
UG PATH = 96'

811 Know what's below. Call before you dig.

CHC
A CONGRUEX® COMPANY
9095 Rio San Diego Dr. Ste 165
San Diego, CA 92108-1694
(949) 250-0004 / FAX (949) 250-0006

REVISIONS

REV.	DESCRIPTION	BY	DATE
0	INITIAL DESIGN	A.T.	8/18/25

BRIGHTSPEED

LCRSWIXC

KEYMAP
N.T.S.

1503 RANGER DR.
RANGER DR. AND SILL ST.
-BORING & RISER PL.
WORK AREA 1 OF 1

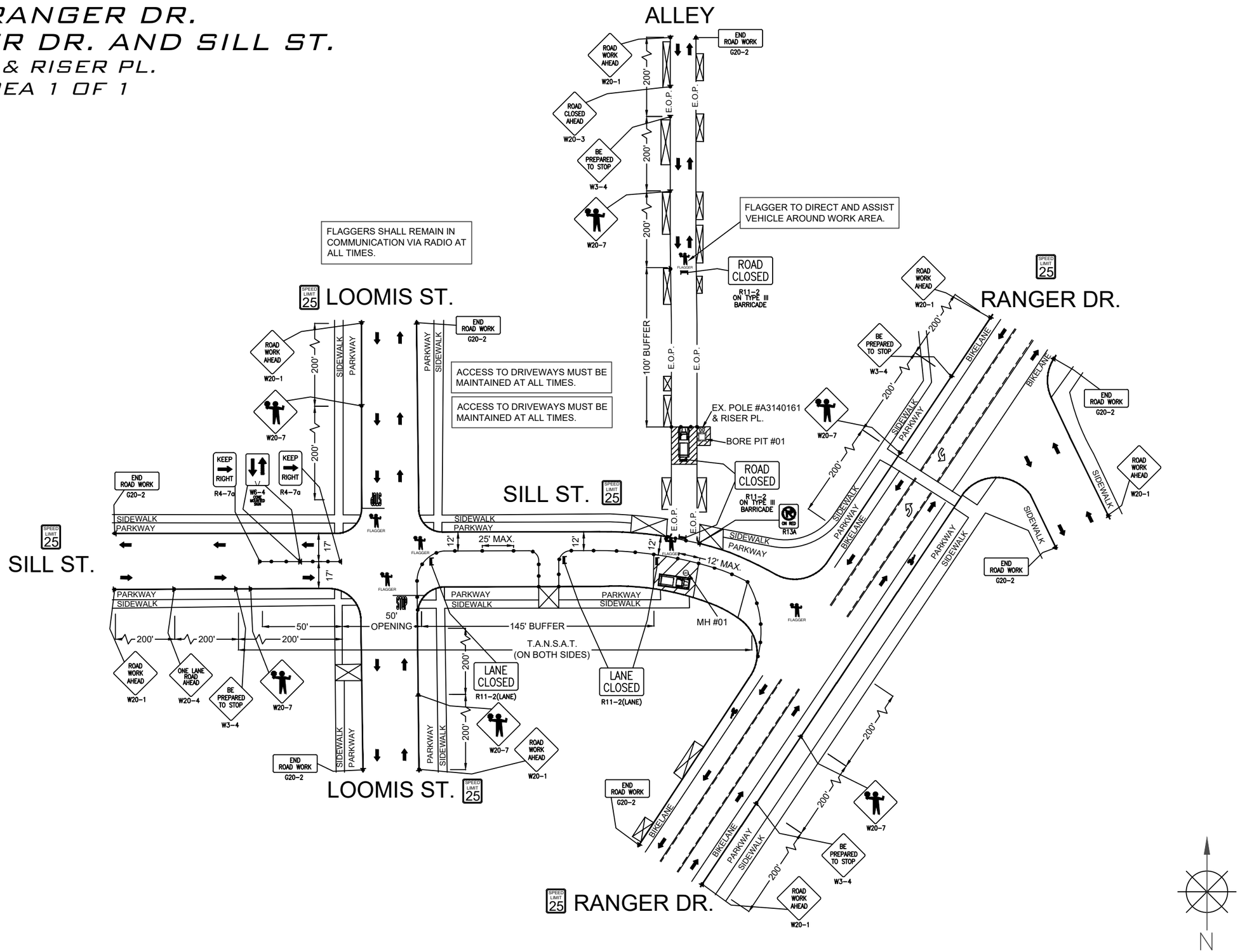

LEGEND

- PORTABLE FLASHING BEACON (P.F.B.)
- TYPE III BARRICADE W/SIGN
- TYPE II BARRICADE W/SIGN
- CHANNELIZING DEVICE
- TRAFFIC CONE WITH CLIP ON SIGN
- TYPE I W/ SIGN
- EXISTING SIGN
- SIGNALIZED INTERSECTION
- FLASHING ARROW BOARD
- HIGH LEVEL WARNING DEVICE (FLAGTREE)
- FLAGGER
- TANSAT — TOW AWAY NO STOPPING ANY TIME
- EXISTING DRIVEWAY
- WORK ZONE (ACTIVITY AREA) LIMITS
- DIRECTION OF TRAFFIC (NOT PAVEMENT MARKING)

CALL 811 BEFORE YOU DIG.
WISCONSIN TOLL FREE
800-242-8511

BRIGHTSPEED

PLANS PREPARED BY:
CHC
A CONGRUEX® COMPANY
9095 Rio San Diego Dr. Ste 165
San Diego, CA 92108-1694
(949) 250-0004 / FAX (949) 250-0006

REVISIONS

REV.	DESCRIPTION	BY	DATE
0	INITIAL DESIGN	A.T.	8/18/25

BRIGHTSPEED
CONFIDENTIAL AND PROPRIETARY

LCRSWIXC

TC-1 OF TC-1

SCALE: 1" : 60'

City of La Crosse, Wisconsin

City Hall
400 La Crosse Street
La Crosse, WI 54601

Text File

File Number: 25-1049

Agenda Date: 9/2/2025 **Version:** 1 **Status:** Agenda Ready

In Control: Board of Public Works **File Type:** General Item

REVOCABLE OCCUPANCY / STREET PRIVILEGE PERMIT APPLICATION FOR COMMUNICATIONS (FIBER OPTICS, TELEPHONE, CABLE, ETC.)

City of La Crosse Engineering Department

Phone: 608-789-7505 Email: engineering@cityoflacrosse.org http://cityoflacrosse.org

Encroachment Owner: Brightspeed of Wisconsin, LLC
Address: 1120 South Tryon St #700 City: Charlotte State: NC Zip: 28203
Phone # (913) 547-5570 Email Address bryan.williams@brightspeed.com

Application Preparer (if different from above) CNS Networks, LLC
Relationship with Owner: Consulting Firm
Phone # 762-246-7989 Email Address bbruneau@congruex.com

Description of Proposed Encroachment:

Brightspeed proposes to bore and place 569 ft of (1)-2" conduit.

Encroachment Addresses (List by Street and 100 blocks):

2402 13th St S

I certify that I have reviewed the Municipal Code and understand all that is related to this permit request. I further certify that I have the full authority to make the foregoing application; the information in the application and the required submittals are complete and correct; the Work or Use performed shall comply with all the laws of the State of Wisconsin, and all ordinances, rules, regulations, policies and special conditions of the City of La Crosse. The applicant agrees to perform the work covered by an approved permit with diligence and convenience to the public. **See Sheet 2 of 2 for Additional Conditions.**

Signature of Owner or designee: *Brittany Bruneau* Date: 06/13/2025
Print Name and Title: Brittany Bruneau - Permit Specialist.

Please return this completed application along with required information and fees noted on checklist below to: City of La Crosse, Engineering Department, 400 La Crosse Street, La Crosse, WI 54601. You will then be given notice of when your request will be on the Board of Public Works agenda for consideration. **Average completion time for validation 45 days**.

BELOW THIS LINE TO BE COMPLETED BY CITY STAFF ONLY

Required items to be provided by Applicant:

- Scale Drawing of encroachments (City Utilities, Lighting and Signals must be shown on Proposed Communications Plan) ☐
- Certificate of Insurance (City as additional Insured) ☐
- Initial Application Fee $_____ ☐
- City Utility Potential Conflict Notification and Sign-Off ☐

Board of Public Works Approval Date:

Encroachment Type:

Permit Number:

All Fees are Non-Refundable & Subject to change by City Council

SHEET 1 OF 2

STREET PRIVILEGE PERMIT CONDITIONS FOR COMMUNICATIONS INSTALLATIONS

1. **The applicant shall be primarily liable for damages to person or property by reason of the granting of this street privilege permit.**

2. **The applicant shall obtain an excavation permit from the City of La Crosse Engineering Department prior to performing installation or any maintenance on the cable in the City right-of-way that requires excavation or disruption of pavement, sidewalk, curb and gutter, or other structure.**

3. **The applicant agrees that tracer wires shall be used and final cable location within the street right-of-way shall be approved by the City Engineer. Cable shall be installed not less than 36 inches deep, unless otherwise approved by the City Engineer.**

4. **Applicant agrees to provide the City of La Crosse with final "as-built" plans when installation is complete.**

5. **Applicant agrees that any pavement, concrete or green space disturbed during drilling activities shall be restored to its prior condition.**

6. **Applicant agrees that said installation shall not interfere with the City's water, sanitary sewer, or storm sewer underground infrastructure that may be in the area.**

7. **Applicant further agrees that they will make arrangements with the public utility companies and the City of La Crosse to clear all public underground utilities prior to initiating such work, and if necessary, applicant will make arrangements with the City of La Crosse to ensure proper traffic control.**

8. **Applicant waives any and all rights to contest in any way or manner the validity of Sec. 66.0425 of the Wisconsin Statutes and the amount of compensation charged.**

9. **Applicant agrees to become a member of Diggers Hotline for marking / locating of utility.**

10. **The applicant for a permit to encroach on the public right-of-way shall procure and maintain for the duration of the permit a minimum liability and contractual liability policy in the amount of $100,000.00 each person, $300,000.00 each accident for bodily injury and $100,000.00 for property damage. A certificate of such insurance shall be filed with the City Attorney as part of the application. The insurance shall name the City, its officials, employees and agents as additional insureds. The Board may approve greater insurance protection on a case-by-case basis.**

11. **Applicant further agrees to hold harmless the City for any damage to said cable while the City, its agents or contractors are conducting construction for maintenance activities in or upon such area in which said cable lies; provided, however, the City shall make a good faith effort to notify applicant of any maintenance or work in the area of the street privilege permit which may damage applicant's cable.**

12. **Applicant agrees to remove the cable and return the area to its original condition upon ten (10) days' notice by the Board of Public Works. The applicant further agrees that if it does not remove the cable within ten (10) days after receiving notice, the City is authorized to remove the same and applicant agrees to pay the City for all costs of such removal.**

13. **Applicant further agrees that the obligations and conditions of this street privilege permit shall be binding upon all heirs, successors and assigns of applicant.**

14. **The person(s) signing this Permit warrant that they have the authority to sign as, or on behalf of, the party for whom they are signing.**

BRIGHTSPEED LA CROSSE

LCRSWIXB
2402 13TH ST S, LA CROSSE, WI 54601, USA
CONDUIT LAYOUT

Sheet List Table	
Sheet Number	Sheet Title
01	COVER SHEET
02	GENERAL NOTES
03	LEGENDS
04	TYPICALS
05 - 06	FIBER LAYOUTS

Material List Table	
ITEM	QUANTITY
FEEDER FIBER	00
JUMPER	00
17X30X18 HH	00
12X24X18 HH	00
24X36X24 HH	0
2" CONDUIT	569'
NEW STRAND	00
ANCHOR	00

BLM INFO	
SECTION	S8
MUNICIPALITY	LA CROSSE
TOWNSHIP	T15N
COUNTY	LA CROSSE
RANGE	R7W

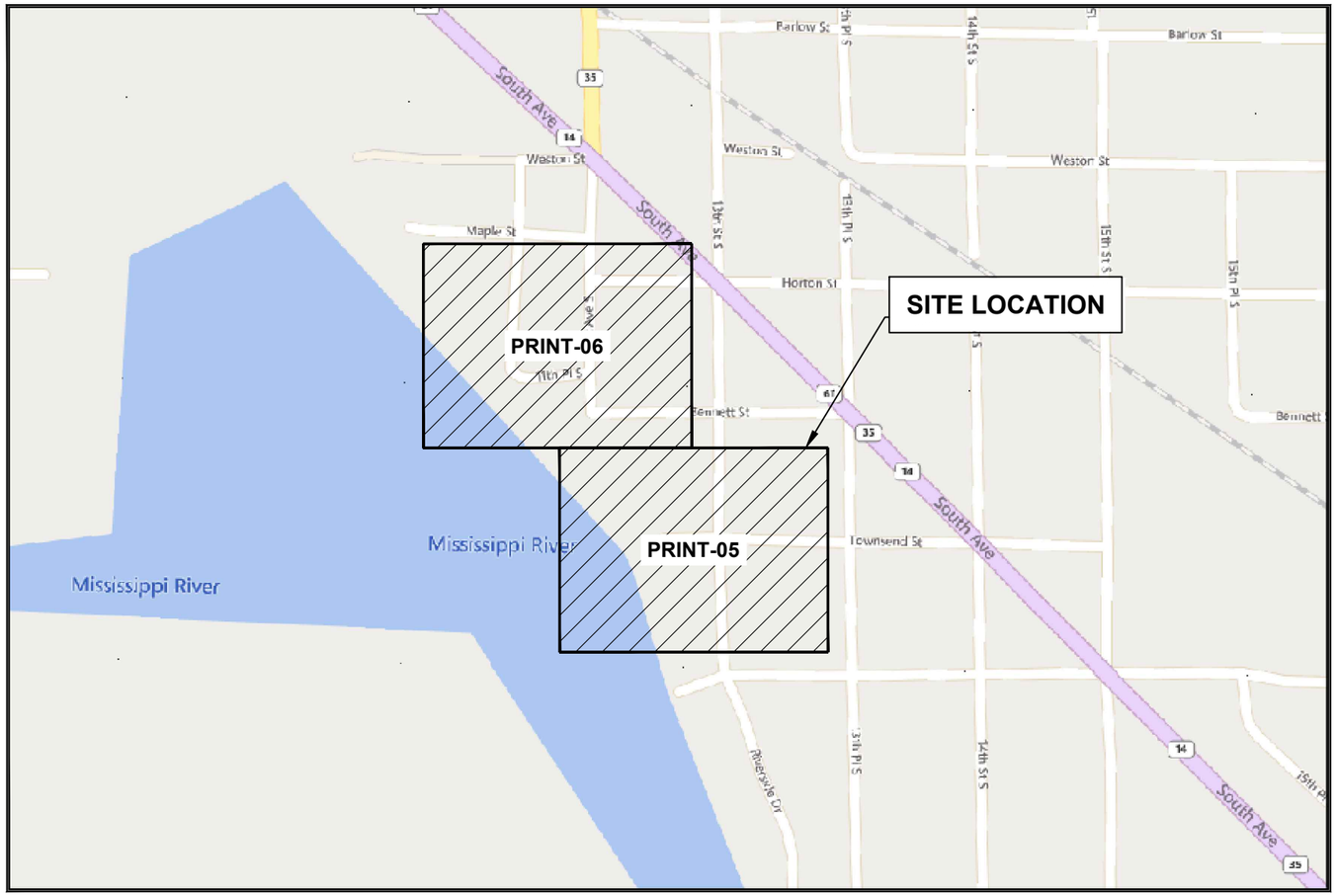

GENERAL ABBREVIATIONS

R/W	RIGHT OF WAY
S/W	SIDEWALK
C/L	CENTER LINE
CSW	CONCRETE SIDEWALK
DWY	DRIVEWAY
FOC	FACE OF CURB
BOC	BACK OF CURB
EOC	EDGE OF CURB
EOP	EDGE OF PAVEMENT
ETW	ETW LINE
HH	HANDHOLE
MH	MANHOLE
N.T.S.	NOT TO SCALE
CONC	CONCRETE
PED	PEDESTAL (UTILITY)
PVC	POLYVINYL CHLORIDE
P/L	PROPERTY LINE
RR	RAILROAD
SL	STREET LIGHT
W-BLDG	WALL TO BUILDING
W-P	WALL TO POLE
W-W	WALL TO WALL
U/E	UTILITY EASEMENT
SD	STORM DRAIN
TS	TRAFFIC SIGNAL

REVISION	DATE	DESCRIPTION

PERMITTING AGENCY
CITY OF LA CROSSE

PROPOSED LINEAR PATH FOOTAGE
UG PATH - 569 ft

N

811 Know what's below. Call before you dig.

CHC A CONGRUEX® COMPANY
9095 Rio San Diego Dr., Suite 450,
San Diego, CA 92108

brightspeed

LCRSWIXB

COVER SHEET

CHC A CONGRUEX® COMPANY

GENERAL NOTES

brightspeed

CONFIDENTIAL AND PROPRIETARY

LCRSWIXB

PLAN SHEET DISCLAIMER:

1. EVERY REASONABLE EFFORT HAS BEEN MADE TO ASSURE THE ACCURACY OF THESE PLANS AND ASSOCIATED DATA.
2. IN AN EFFORT TO INCREASE THE CLARITY AND LEGIBILITY OF THE PLANS, EXISTING UNDERGROUND UTILITIES WILL NOT BE SHOWN UNLESS THERE IS PROPOSED WORK THAT WILL REQUIRE EXCAVATION OR ANY OTHER EARTH DISTURBING ACTIVITY. IF PROPOSED WORK WILL REQUIRE THIS TYPE OF ACTIVITY. EXISTING UNDERGROUND UTILITIES WILL BE PROPERLY INVESTIGATED AND REPRESENTED ON THE PLAN SHEET OF THE RESPECTIVE WORK LOCATION

UTILITIES

1. THE IDENTITY AND LOCATION OF EXISTING UNDERGROUND UTILITIES LOCATED IN AND AROUND THE CONSTRUCTION AREA HAVE BEEN SHOWN AND LABELED ON THE PLANS BY USING INFORMATION PROVIDED BY THE RESPECTIVE UTILITY OWNERS.
2. SUPPORT AND PROTECTION OF ALL UTILITIES AND APPURTENANCES SHALL BE THE RESPONSIBILITY OF THE CONTRACTOR. COSTS FOR THE REPAIR AND RESTORATION OF EXISTING UTILITIES DAMAGED BY THE CONTRACTOR SHALL BE THE RESPONSIBILITY OF THE CONTRACTOR
3. CALL 811 BEFORE YOU DIG. AT LEAST 48 HOURS PRIOR TO EXCAVATION.

WORK LIMITS

1. THE WORK LIMITS SHOWN ON THESE PLANS ARE FOR PHYSICAL CONSTRUCTION ONLY. THE INSTALLATION AND OPERATION OF ALL TEMPORARY TRAFFIC CONTROL AND TEMPORARY TRAFFIC CONTROL DEVICES REQUIRED BY THESE PLANS SHALL BE PROVIDED BY THE CONTRACTOR WHETHER INSIDE OR OUTSIDE OF THESE WORK LIMITS.

MAINTAIN DRAINAGE

1. THE CONTRACTOR AT HIS OWN EXPENSE, SHALL MAINTAIN THE FLOW IN ALL SEWERS, DRAINS, FIELD TILES, AND WATERCOURSES ENCOUNTERED IN AND AROUND THE PROJECT SITE. IF SUCH WATERCOURSES OR DRAINS ARE DISTURBED OR DESTROYED DURING THE EXECUTION OF THE PROJECT, THEY SHALL BE RESTORED BY THE CONTRACTOR AT HIS OWN EXPENSE TO A CONDITION SATISFACTORY TO THE ENGINEER.

SECURING EXCAVATIONS & TRENCHES FOR NON-WORKING HOURS

1. EXCAVATIONS AND TRENCHES OVER 24-INCHES DEEP SHALL BE SECURELY PLATED OR BACKFILLED DURING NON-WORKING HOURS.

EXCAVATION OF ROADWAY AND RIGHT-OF-WAY AREAS

1. ANY CONTRACTOR PERFORMING EXCAVATION, INCLUDING BUT NOT LIMITED TO DISTURBING THE EARTH WTH POWERED OR NON-POWERED EQUIPMENT, DRILLING AND/OR BORING, SHALL CAUSE NOTICE TO BE GIVEN BY CALLING 811 AT LEAST 48 HOURS BUT NOT MORE THAN 10 WORKING DAYS BEFORE EXCAVATING.
2. THE EXCAVATOR SHALL PROTECT AND PRESERVE THE MARKINGS UNTIL THOSE MARKINGS ARE NO LONGER NEEDED. IF AN EXCAVATION WILL COVER A LARGE AREA AND/OR PROGRESS FROM ONE AREA TO THE NEXT OVER A PERIOD OF TIME. THE EXCAVATOR SHALL COORDINATE THE MARKING OF APPROXIMATE LOCATIONS OF CITY OWNED FACILITIES WITH THE ACTUAL EXCAVATION.
3. THE CONTRACTOR IS RESPONSIBLE FOR LOCATING ALL CUSTOMER OWNED SERVICE LINES/LATERALS. THE CONTRACTOR SHALL FIELD VERIFY THE HORIZONTAL AND VERTICAL LOCATION OF ANY CITY OR CUSTOMER OWNED MAIN OR SERVICE LINE/LATERALS THAT MAY BE AFFECTED BY THE PROPOSED CONSTRUCTION ACTIVITIES. FIELD VERIFICATION SHALL TAKE PLACE PRIOR TO ANY ACTIVITY THAT MAY JEOPARDIZE THE INTEGRITY OF THE FACILITY AND AT A LOCATION NEAREST THE POINT OF POSSIBLE CONFLICT.
4. ANY DAMAGES TO CITY OR CUSTOMER OWNED FACILITIES SHOULD FIRST BE REPORTED TO THE UTILITY OWNER THEN IMMEDIATELY NOTIFY THE PROJECT ENGINEER.

AERIAL CONSTRUCTION:

1. CONTRACTOR TO VERIFY ALL BONDING AND GROUNDING COMPLES WITH NESC GUIDELINES.
2. CONSTRUCTION TO VERIFY ALL REQUIRED MAKE READY WORK IS COMPLETE BEFORE PLACING ON UTILITY POLES.

SAFETY NOTE:

1. CHECK IN WITH CONSTRUCTION SUPERVISOR WHEN ARRIVING ON-SITE.
2. HEAVY CONSTRUCTION EQUIPMENT IN USE. BEWARE OF SURROUNDINGS.
3. FOLLOW CONGRUEX SAFETY POLICIES AND GUIDELINES AT ALL TIMES WHILE WORKING.
4. CONSTRUCTION ZONE/ HARD HAT, SAFETY GLASSES, REFLECTIVE VEST/SHIRT, SAFETY TOE BOOTS REQUIRED – WORK SAFELY

CHC
A CONGRUEX® COMPANY

LEGENDS SHEET

brightspeed
CONFIDENTIAL AND PROPRIETARY
LCRSWIXB

65

EXISTING EQUIPMENTS LEGENDS

- R/W — R/W
- C\L — CENTER LINE
- EOP — EOP
- BOC — BOC
- PROPERTY LINE
- FENCE
- T — TELCO
- E — ELECTRIC
- G — GAS
- TS — TRAFFIC SIGNAL
- W — WATER
- S — SEWER
- SD — STORM DRAIN
- U/E — UTILITY EASEMENT
- RAIL TRACKS
- SIDEWALK

- CABINET
- EXISTING PED
- FP — EXISTING FLOWERPOT
- HH — EXISTING HANDHOLE
- TELEPHONE CABINET
- TELEPHONE MANHOLE
- POLE
- CABLE MARKER
- STREET SIGN
- VERTICAL GROUND
- E — ELECTRIC PEDESTAL/CABINET

- PWR — ELECTRIC TRANSFORMER
- E — ELECTRIC METER
- E — ELECTRIC VAULT/HANDHOLE
- E — ELECTRIC MANHOLE
- V — EXISTING VAULT
- STREETLIGHT
- P — POWER PED
- TV — CATV PED
- TV — CATV VAULT/HANDHOLE
- TREE
- TRANSFORMER

- G — GAS METER
- GV — GAS VALVE
- S — SEWER MANHOLE
- MH — UNKNOWN MANHOLE
- W — WATER METER
- WV — WATER VALVE
- H — FIRE HYDRANT
- WHH — WATER MANHOLE
- STORM DRAIN CATCH BASIN
- SD — STORM DRAIN MANHOLE

- CULVERT
- C/L MONUMENT
- ANCHOR & DOWN GUY

PROPOSED EQUIPMENTS LEGENDS

- BORE — BORE — BORE
- TRENCH
- A — AERIAL FIBER
- AERIAL STRAND

- 12"X24"X18" HANDHOLE
- 17"X30"X18" HANDHOLE
- 24"X36"X24" HANDHOLE
- 36"X48"X30" HANDHOLE
- ANCHOR & DOWN GUY

CHC A CONGRUEX® COMPANY

TYPICALS SHEET

brightspeed

CONFIDENTIAL AND PROPRIETARY

LCRSWIXB

MINIMUM STANDARDS FOR DIRECTIONAL BORING
STREET CROSSINGS

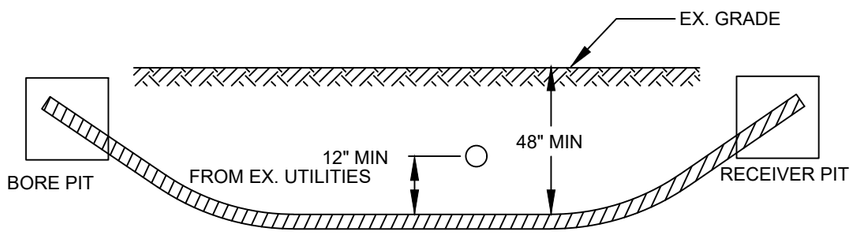

- PLACE END MARKER WITH UTILITY OWNER'S NAME DESCRIBING CONDUIT
- BORE PIT TO BE BACKFILLED AND COMPACTED IN 12" LIFTS WITH MATERIAL REMOVED
- FLOW OF DITCH MUST BE MAINTAINED AT ALL TIMES
- PROTECT ROOTS AT ALL TREE LOCATIONS, SHIFT BORE TRENCH IF NECESSARY

TYPICAL BORE DETAILS 1

MINIMUM STANDARDS FOR DIRECTIONAL BORING
UNDER SIDEWALKS & WITHIN ROW (EXCLUDING STREET CROSSINGS)

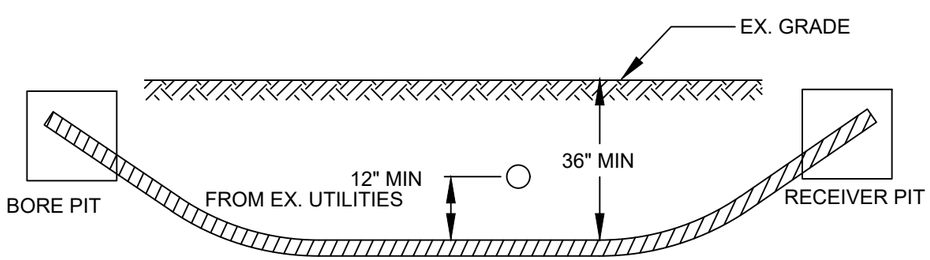

- PLACE END MARKER WITH UTILITY OWNER'S NAME DESCRIBING CONDUIT
- BORE PIT TO BE BACKFILLED AND COMPACTED IN 12" LIFTS WITH MATERIAL REMOVED
- FLOW OF DITCH MUST BE MAINTAINED AT ALL TIMES
- PROTECT ROOTS AT ALL TREE LOCATIONS, SHIFT BORE TRENCH IF NECESSARY

TYPICAL BORE DETAILS 2

PLAN VIEW

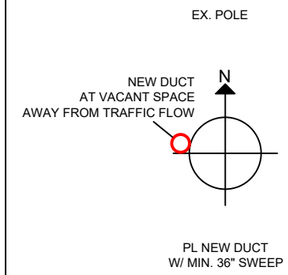

ELEVATION

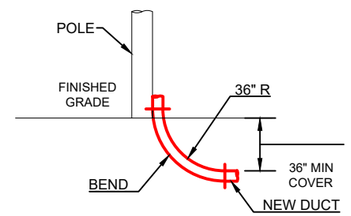

RISER DETAILS

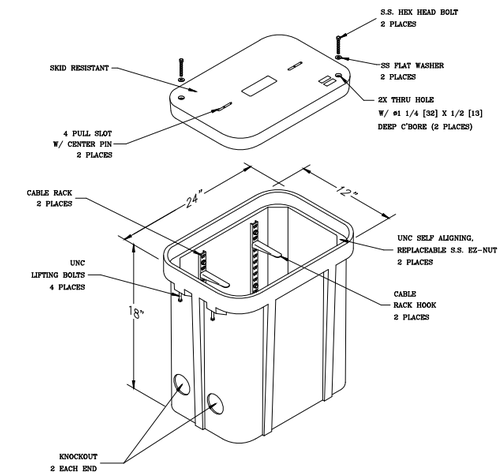

12"x24"x18"
N.T.S.

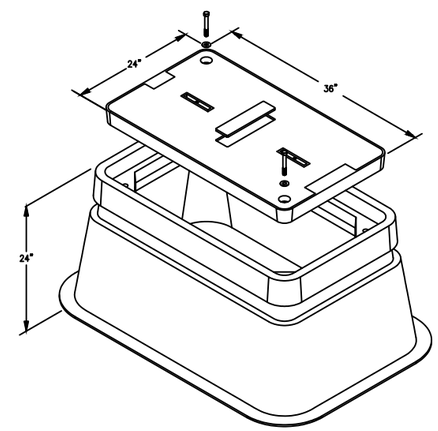

24"x36"x24"
N.T.S.

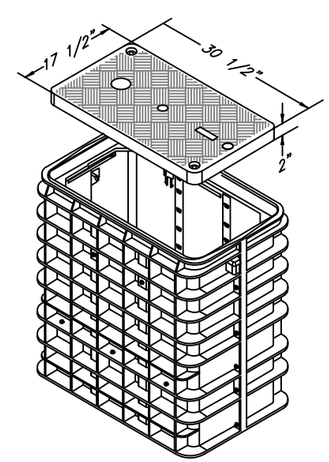

17"x30"x18"
N.T.S.

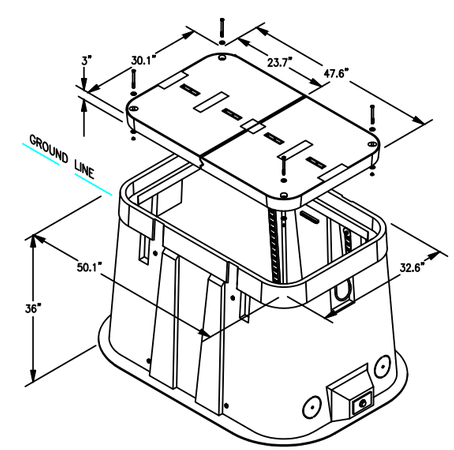

30"x48"x36"
N.T.S.

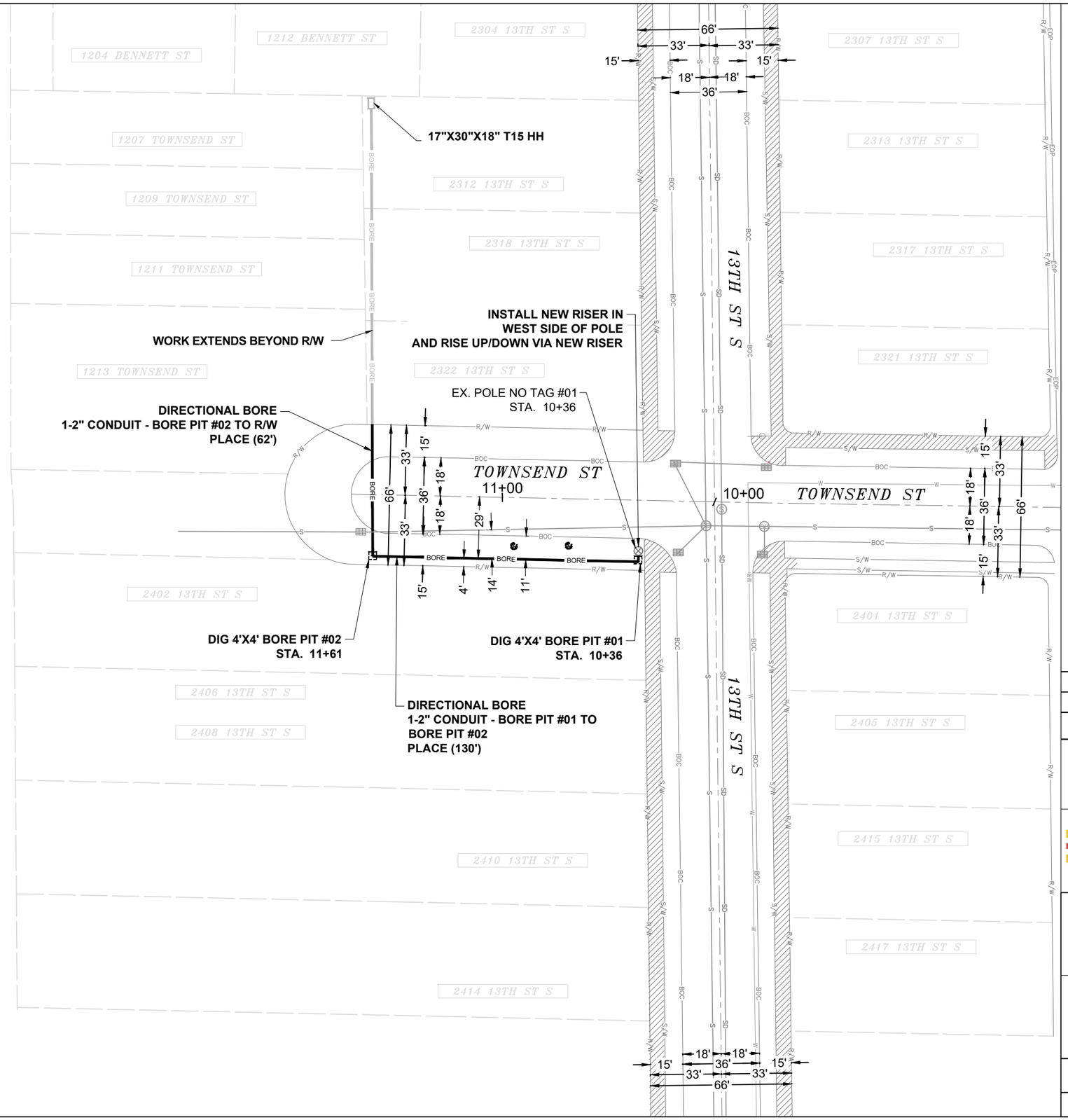

EXCAVATION DATA	
PROPOSED UTILITY	DIRT
(2) 4'X4' BORE PIT	32 SQFT

CALL 811 BEFORE YOU DIG.
WISCONSIN TOLL FREE
800-242-8511

brightspeed

CHC
A CONGRUEX® COMPANY

CONFIDENTIAL AND PROPRIETARY
LCRSWIXB

05 OF 06

SCALE: 1" = 50'

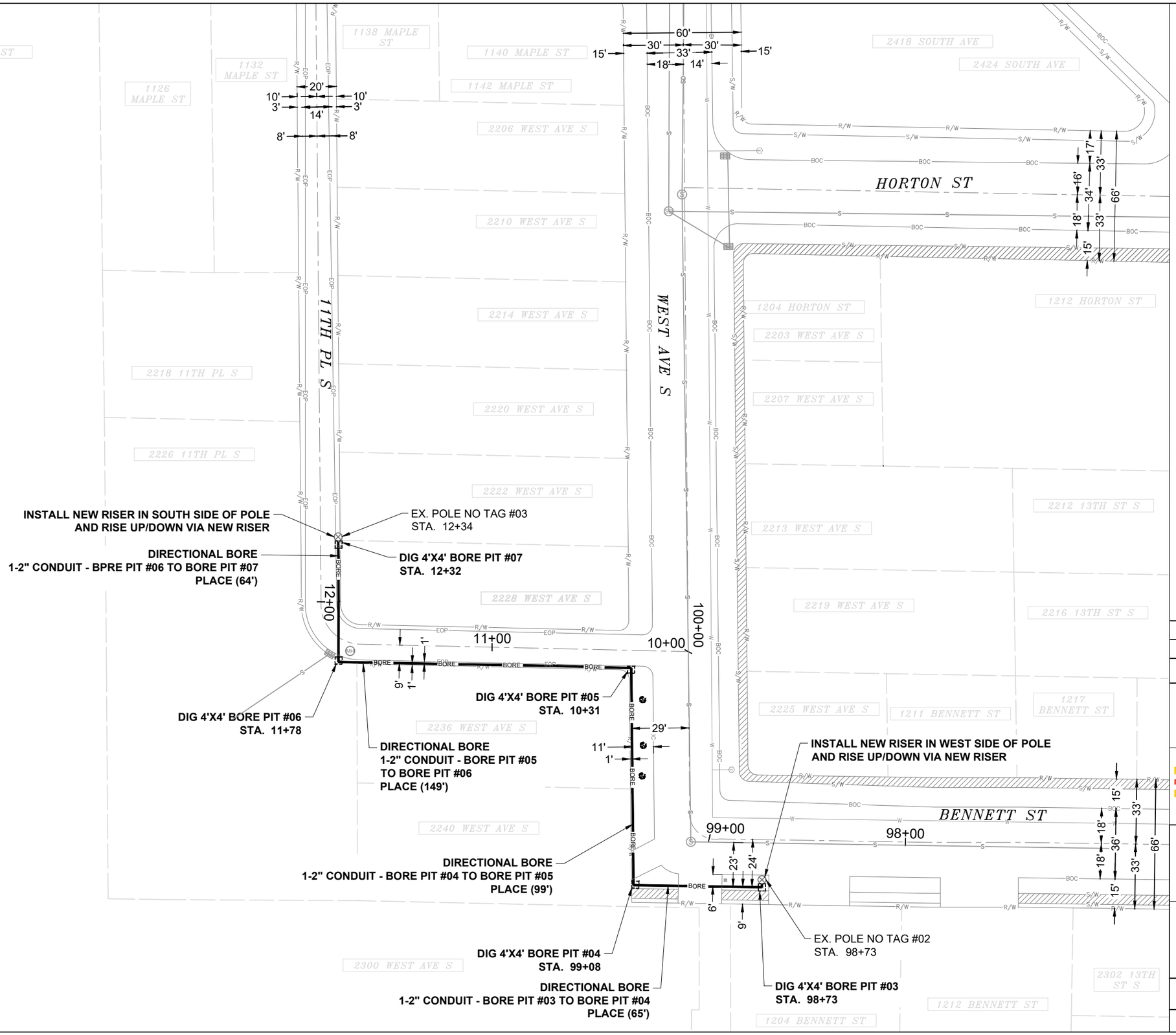

EXCAVATION DATA

PROPOSED UTILITY	DIRT
(5) 4'X4' BORE PIT	80 SQFT

CALL 811 BEFORE YOU DIG.
WISCONSIN TOLL FREE
800-242-8511

brightspeed

CHC
A CONGRUEX® COMPANY

CONFIDENTIAL AND PROPRIETARY
LCRSWIXB

06 OF 06

SCALE: 1" = 50'

City of La Crosse, Wisconsin

City Hall
400 La Crosse Street
La Crosse, WI 54601

Text File

File Number: 25-1051

Agenda Date: 9/2/2025 **Version:** 1 **Status:** Agenda Ready

In Control: Board of Public Works **File Type:** General Item

CONSTRUCTION NOTE:
BURY CABLE AT A MINIMUM OF 36" DEPTH UNLESS OTHERWISE NOTED ON PRINTS.

CONSTRUCTION NOTE:
CHARTER COMMUNICATIONS WILL PLACE PROPOSED CABLES IN CORRIDOR AS CLOSE TO THE BACK OF RIGHT-OF-WAY AS POSSIBLE, PENDING LOCATES.

LEGEND

TB : TREE BORE(DIRECTIONAL BORE)
RB : ROAD BORE (DIRECTIONAL BORE)
T : TRENCH
HD : HAND DIG
P : PLOW

CHARTER COMMUNICATIONS PROPOSES TO BURY FIBER COMMUNICATION CABLE IN A 2" CONDUIT

CONTACT THE STREET DEPARTMENT FOR ANY CONCRETE OR ASPHALT REMOVAL
1-608-789-7340 (TROY SCHMUTZER)

FIBER CABLE

POTHOLE UTILITIES

CONSTRUCTION NOTE:
POTHOLE WHERE NECESSARY AND ADJUST DEPTH ACCORDINGLY

THE UTILITIES SHOWN ON THIS PLAN ARE INDICATED IN ACCORDANCE WITH AVAILABLE RECORDS. THE CONTRACTOR SHALL BE RESPONSIBLE FOR OBTAINING EXACT LOCATIONS AND ELEVATIONS OF ALL UTILITIES FROM THE OWNERS OF THE RESPECTIVE UTILITIES AND FROM FIELD VERIFICATION.

SCOPE OF WORK MAY NOT BE INCLUSIVE OF ALL FEDERAL/STATE/LOCAL PERMITS REQUIRED FOR PROJECT. CLIENT IS RESPONSIBLE FOR ANY ADDITIONAL REVIEW AND/OR PERMITS NOT SPECIFICALLY DICTATED IN OUR SCOPE OF WORK.

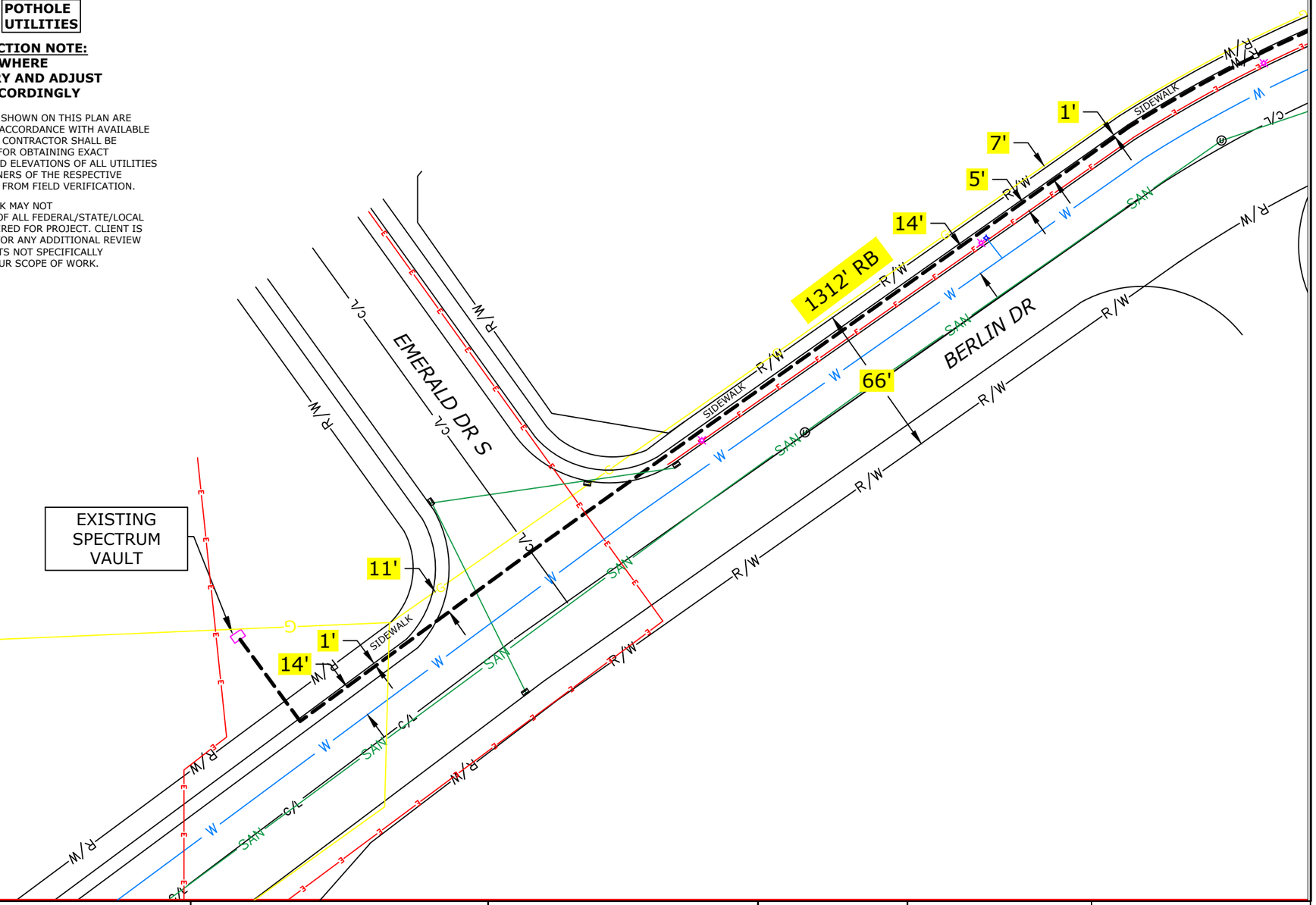

LEGEND

JOINT POLE
NEW JOINT POLE
POWER POLE
NEW POWER POLE
BORE PIT
EXISTING PEDESTAL
NEW PEDESTAL
FIBER SLACK LOOP
ELECTRIC PEDESTAL
RISER POLE
ANCHOR & DOWNGUY
NEW ANCHOR & DOWNGUY
JOINT ANCHOR
NEW JOINT ANCHOR
TEL CABINET
CALL BOX
STORM DRAIN
UTILITY VALVE
MANHOLE
EXISTING FIBER COIL
NEW FIBER COIL
EXISTING VAULT
NEW CHARTER VAULT
SHRUBS
DECIDUOUS TREE
GROUND
NEW GROUND
PROPERTY LINE
ROADWAY CENTERLINE
FIBER WARNING SIGN
TRAFFIC LIGHT
HYDRANT
SIGNS
STREET LIGHT
FIBER SPLICE CASE

LINETYPES

NEW UNDERGROUND CABLE
PROPOSED FIBER
GAS
WATER
ELECTRICAL
STORM
SANITARY
CABLE TV
TELEPHONE

mi-TECH
(920)465-8018
GREEN BAY, BROWNSVILLE, NEW BERLIN & MINNEAPOLIS

PROJECT #6116976
PERMIT I.D. #6116976CITY

Spectrum
1228 12TH AVE S
ONALASKA, WI 54650

N

ADDRESS	LOCATION
4119 BERLIN DR	ONALASKA, WI

FIELDED BY:	DATE:
DRAFTED BY: MP	DATE: 8/7/2025
DESIGNED BY:	DATE:
ASBUILTS BY:	DATE:

1 2

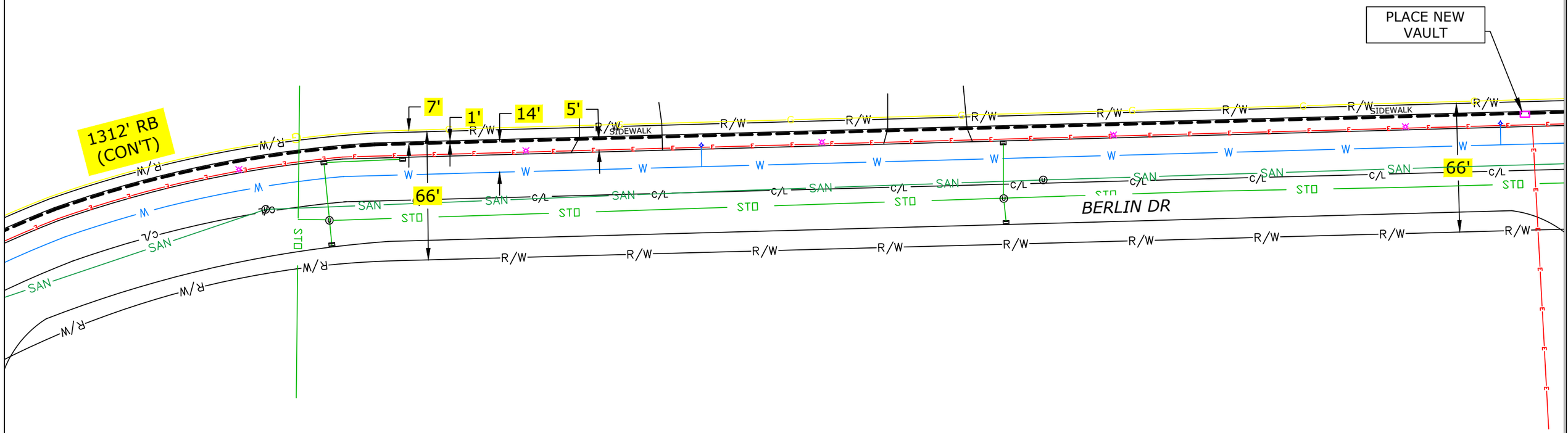

CONSTRUCTION NOTE:
BURY CABLE AT A MINIMUM OF 36" DEPTH UNLESS OTHERWISE NOTED ON PRINTS.

CONSTRUCTION NOTE:
CHARTER COMMUNICATIONS WILL PLACE PROPOSED CABLES IN CORRIDOR AS CLOSE TO THE BACK OF RIGHT-OF-WAY AS POSSIBLE, PENDING LOCATES.

LEGEND

TB : TREE BORE(DIRECTIONAL BORE)
RB : ROAD BORE (DIRECTIONAL BORE)
T : TRENCH
HD : HAND DIG
P : PLOW

CHARTER COMMUNICATIONS PROPOSES TO BURY FIBER COMMUNICATION CABLE IN A 2" CONDUIT

FIBER CABLE

POTHOLE UTILITIES

CONSTRUCTION NOTE:
POTHOLE WHERE NECESSARY AND ADJUST DEPTH ACCORDINGLY

THE UTILITIES SHOWN ON THIS PLAN ARE INDICATED IN ACCORDANCE WITH AVAILABLE RECORDS. THE CONTRACTOR SHALL BE RESPONSIBLE FOR OBTAINING EXACT LOCATIONS AND ELEVATIONS OF ALL UTILITIES FROM THE OWNERS OF THE RESPECTIVE UTILITIES AND FROM FIELD VERIFICATION.

SCOPE OF WORK MAY NOT BE INCLUSIVE OF ALL FEDERAL/STATE/LOCAL PERMITS REQUIRED FOR PROJECT. CLIENT IS RESPONSIBLE FOR ANY ADDITIONAL REVIEW AND/OR PERMITS NOT SPECIFICALLY DICTATED IN OUR SCOPE OF WORK.

CONTACT THE STREET DEPARTMENT FOR ANY CONCRETE OR ASPHALT REMOVAL
1-608-789-7340 (TROY SCHMUTZER)

mi-TECH
(920)465-8018
GREEN BAY, BROWNSVILLE, NEW BERLIN & MINNEAPOLIS

LEGEND

JOINT POLE
NEW JOINT POLE
POWER POLE
NEW POWER POLE
BORE PIT
EXISTING PEDESTAL
NEW PEDESTAL
FIBER SLACK LOOP
ELECTRIC PEDESTAL
RISER POLE
ANCHOR & DOWNGUY
NEW ANCHOR & DOWNGUY
JOINT ANCHOR
NEW JOINT ANCHOR
TEL CABINET
CALL BOX
STORM DRAIN
UTILITY VALVE
MANHOLE
EXISTING FIBER COIL
NEW FIBER COIL
EXISTING VAULT
NEW CHARTER VAULT
SHRUBS
DECIDUOUS TREE
GROUND
NEW GROUND
PROPERTY LINE
ROADWAY CENTERLINE
FIBER WARNING SIGN
TRAFFIC LIGHT
HYDRANT
SIGNS
STREET LIGHT
FIBER SPLICE CASE

LINETYPES

NEW UNDERGROUND CABLE
PROPOSED FIBER
GAS
WATER
ELECTRICAL
STORM
SANITARY
CABLE TV
TELEPHONE

PROJECT #6116976
PERMIT I.D. #6116976CITY

Spectrum
1228 12TH AVE S
ONALASKA, WI 54650

N

ADDRESS		LOCATION
4119 BERLIN DR		ONALASKA, WI
FIELDED BY:	DATE:	
DRAFTED BY: MP	DATE: 8/7/2025	
DESIGNED BY:	DATE:	
ASBUILTS BY:	DATE:	

1 2 3

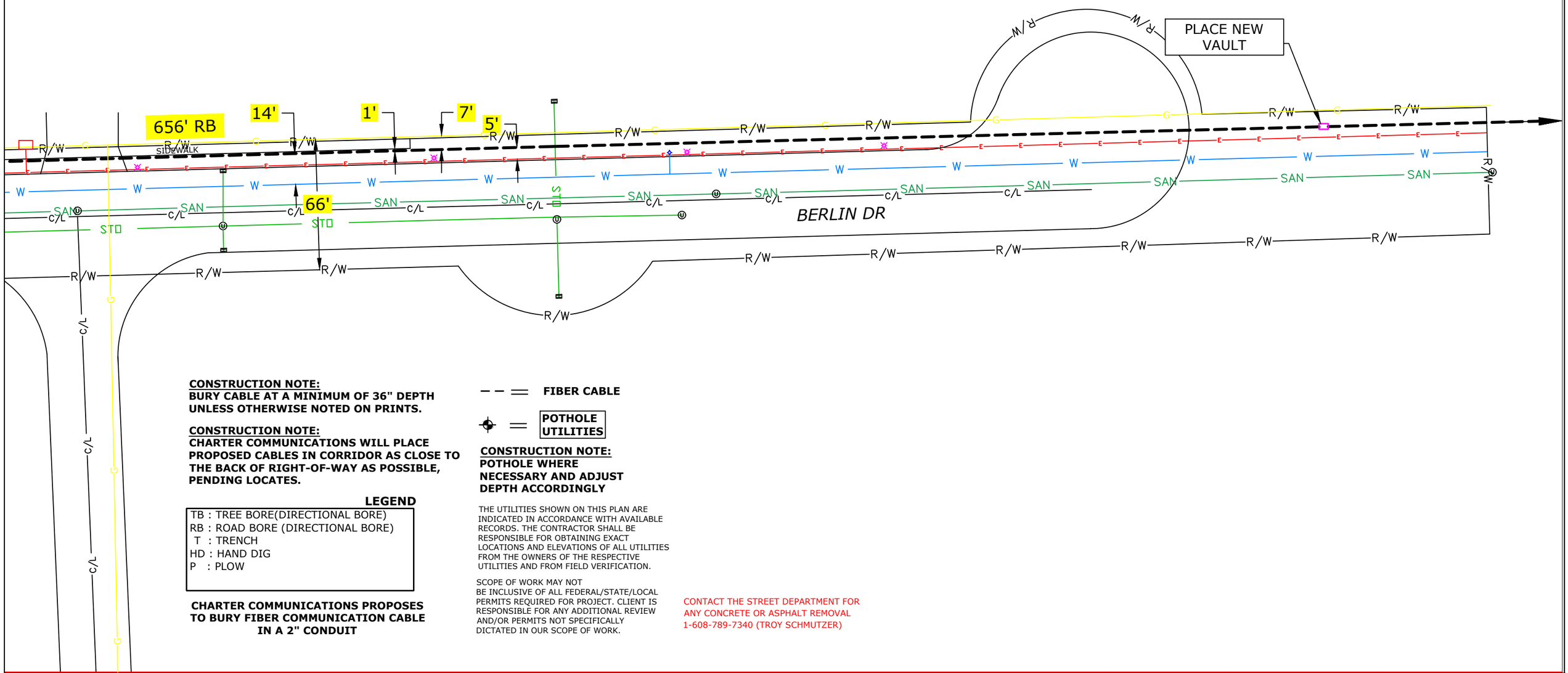

CONSTRUCTION NOTE:
BURY CABLE AT A MINIMUM OF 36" DEPTH UNLESS OTHERWISE NOTED ON PRINTS.

CONSTRUCTION NOTE:
CHARTER COMMUNICATIONS WILL PLACE PROPOSED CABLES IN CORRIDOR AS CLOSE TO THE BACK OF RIGHT-OF-WAY AS POSSIBLE, PENDING LOCATES.

LEGEND

TB : TREE BORE(DIRECTIONAL BORE)
RB : ROAD BORE (DIRECTIONAL BORE)
T : TRENCH
HD : HAND DIG
P : PLOW

CHARTER COMMUNICATIONS PROPOSES TO BURY FIBER COMMUNICATION CABLE IN A 2" CONDUIT

FIBER CABLE

POTHOLE UTILITIES

CONSTRUCTION NOTE:
POTHOLE WHERE NECESSARY AND ADJUST DEPTH ACCORDINGLY

THE UTILITIES SHOWN ON THIS PLAN ARE INDICATED IN ACCORDANCE WITH AVAILABLE RECORDS. THE CONTRACTOR SHALL BE RESPONSIBLE FOR OBTAINING EXACT LOCATIONS AND ELEVATIONS OF ALL UTILITIES FROM THE OWNERS OF THE RESPECTIVE UTILITIES AND FROM FIELD VERIFICATION.

SCOPE OF WORK MAY NOT BE INCLUSIVE OF ALL FEDERAL/STATE/LOCAL PERMITS REQUIRED FOR PROJECT. CLIENT IS RESPONSIBLE FOR ANY ADDITIONAL REVIEW AND/OR PERMITS NOT SPECIFICALLY DICTATED IN OUR SCOPE OF WORK.

CONTACT THE STREET DEPARTMENT FOR ANY CONCRETE OR ASPHALT REMOVAL
1-608-789-7340 (TROY SCHMUTZER)

mi-TECH
(920)465-8018
GREEN BAY, BROWNSVILLE, NEW BERLIN & MINNEAPOLIS

LEGEND

- JOINT POLE
- NEW JOINT POLE
- POWER POLE
- NEW POWER POLE
- BORE PIT
- EXISTING PEDESTAL
- NEW PEDESTAL
- FIBER SLACK LOOP
- ELECTRIC PEDESTAL
- RISER POLE
- ANCHOR & DOWNGUY
- NEW ANCHOR & DOWNGUY
- JOINT ANCHOR
- NEW JOINT ANCHOR
- TEL CABINET
- CALL BOX
- STORM DRAIN
- UTILITY VALVE
- MANHOLE
- EXISTING FIBER COIL
- NEW FIBER COIL
- EXISTING VAULT
- NEW CHARTER VAULT
- SHRUBS
- DECIDUOUS TREE
- GROUND
- NEW GROUND
- PROPERTY LINE
- ROADWAY CENTERLINE
- FIBER WARNING SIGN
- TRAFFIC LIGHT
- HYDRANT
- SIGNS
- STREET LIGHT
- FIBER SPLICE CASE

LINETYPES

- NEW UNDERGROUND CABLE
- PROPOSED FIBER
- GAS
- WATER
- ELECTRICAL
- STORM
- SANITARY
- CABLE TV
- TELEPHONE

PROJECT #6116976
PERMIT I.D. #6116976CITY

Spectrum
1228 12TH AVE S
ONALASKA, WI 54650

N

ADDRESS	LOCATION
4119 BERLIN DR	ONALASKA, WI
FIELDED BY: DATE:	
DRAFTED BY: MP DATE: 8/7/2025	2 / 3
DESIGNED BY: DATE:	
ASBUILTS BY: DATE:	

REVOCABLE OCCUPANCY / STREET PRIVILEGE PERMIT APPLICATION
FOR COMMUNICATIONS (FIBER OPTICS, TELEPHONE, CABLE, ETC.)
City of La Crosse Engineering Department
Phone: 608-789-7505 Email: engineering@cityoflacrosse.org http://cityoflacrosse.org

Encroachment Owner: Perry McClellan-Charter Communications #6116976
Address: 1228 12th Ave S City: Onalaska State: WI Zip: 54650
Phone # 715-519-0033 608-783-8122 Email Address Perry.McClellan@charter.com

Application Preparer (if different from above) Michele Peterson-Mi-Tech Services
Relationship with Owner: contractor for design and permitting
Phone # 920-924-3690 ext 3528 Email Address mpeterso@mi-tech.us

Description of Proposed Encroachment:

bore new conduit, place new vaults

Encroachment Addresses (List by Street and 100 blocks):

4119 Berlin Dr

I certify that I have reviewed the Municipal Code and understand all that is related to this permit request. I further certify that I have the full authority to make the foregoing application; the information in the application and the required submittals are complete and correct; the Work or Use performed shall comply with all the laws of the State of Wisconsin, and all ordinances, rules, regulations, policies and special conditions of the City of La Crosse. The applicant agrees to perform the work covered by an approved permit with diligence and convenience to the public. **See Sheet 2 of 2 for Additional Conditions.**

Signature of Owner or designee: Perry McClellan Date: 8/07/2025
Print Name and Title: Perry McClellan Construction Coordinator

Please return this completed application along with required information and fees noted on checklist below to: City of La Crosse, Engineering Department, 400 La Crosse Street, La Crosse, WI 54601. You will then be given notice of when your request will be on the Board of Public Works agenda for consideration. **Average completion time for validation 45 days**.

BELOW THIS LINE TO BE COMPLETED BY CITY STAFF ONLY

Required items to be provided by Applicant:

- Scale Drawing of encroachments (Complete Utility Locate by Digger's Hotline Requried) ☐
- Certificate of Insurance (City as additional Insured) ☐
- Initial Application Fee $ 100.00 ☐
- City Utility Potential Conflict Notification and Sign-Off ☐

Board of Public Works Approval Date:

Encroachment Type:

Permit Number:

All Fees are Non-Refundable & Subject to change by City Council

City of La Crosse, Wisconsin

City Hall
400 La Crosse Street
La Crosse, WI 54601

Text File

File Number: 25-1052

Agenda Date: 9/2/2025 **Version:** 1 **Status:** Agenda Ready

In Control: Board of Public Works **File Type:** General Item

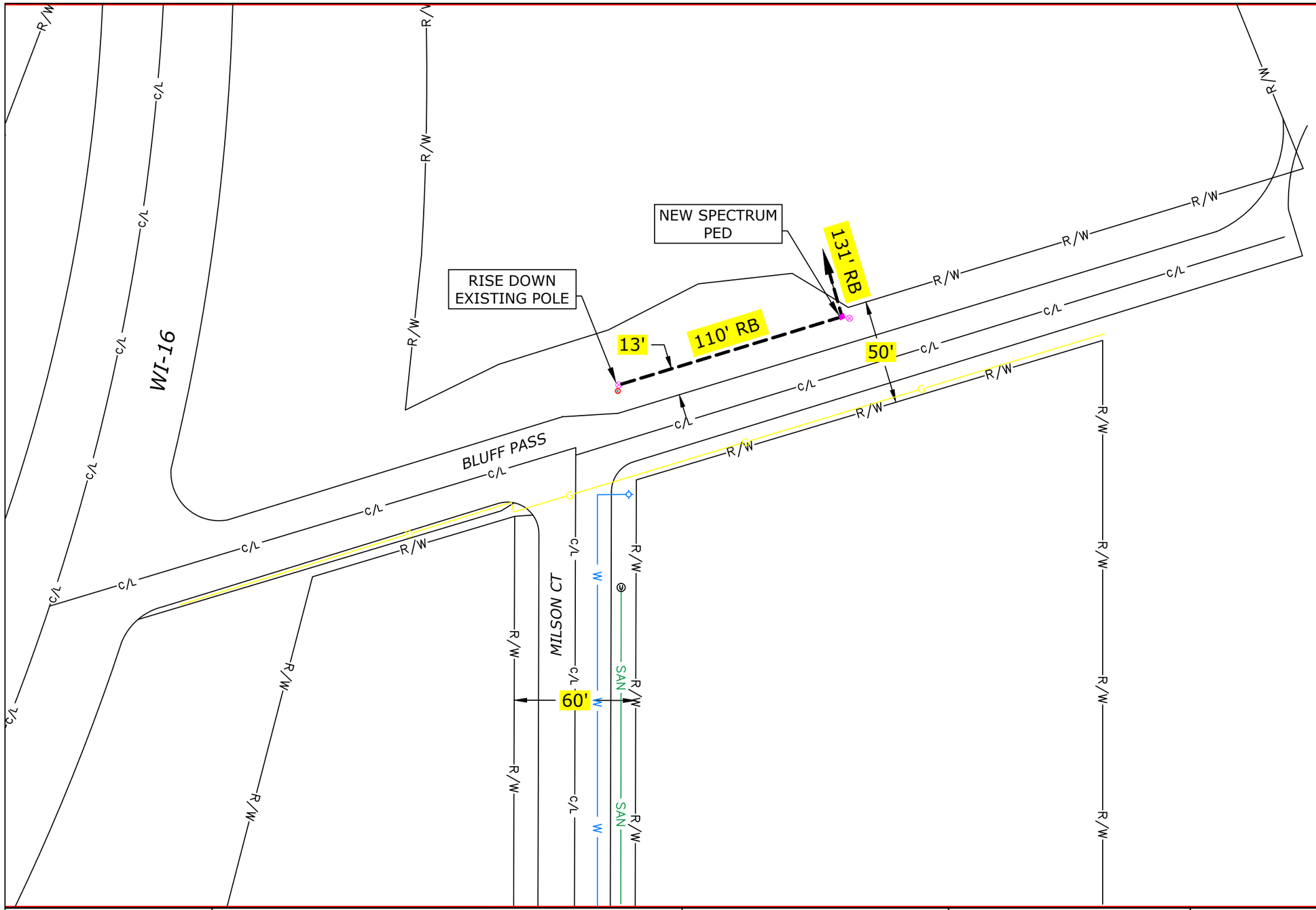

CONSTRUCTION NOTE:
BURY CABLE AT A MINIMUM OF 30" DEPTH UNLESS OTHERWISE NOTED ON PRINTS.

CONSTRUCTION NOTE:
CHARTER COMMUNICATIONS WILL PLACE PROPOSED CABLES IN CORRIDOR AS CLOSE TO THE BACK OF RIGHT-OF-WAY AS POSSIBLE, PENDING LOCATES.

LEGEND

TB : TREE BORE(DIRECTIONAL BORE)
RB : ROAD BORE (DIRECTIONAL BORE)
T : TRENCH
HD : HAND DIG
P : PLOW

CHARTER COMMUNICATIONS PROPOSES TO BURY COAX COMMUNICATION CABLE IN A 2" CONDUIT

COAX CABLE

POTHOLE UTILITIES

CONSTRUCTION NOTE:
POTHOLE WHERE NECESSARY AND ADJUST DEPTH ACCORDINGLY

THE UTILITIES SHOWN ON THIS PLAN ARE INDICATED IN ACCORDANCE WITH AVAILABLE RECORDS. THE CONTRACTOR SHALL BE RESPONSIBLE FOR OBTAINING EXACT LOCATIONS AND ELEVATIONS OF ALL UTILITIES FROM THE OWNERS OF THE RESPECTIVE UTILITIES AND FROM FIELD VERIFICATION.

SCOPE OF WORK MAY NOT BE INCLUSIVE OF ALL FEDERAL/STATE/LOCAL PERMITS REQUIRED FOR PROJECT. CLIENT IS RESPONSIBLE FOR ANY ADDITIONAL REVIEW AND/OR PERMITS NOT SPECIFICALLY DICTATED IN OUR SCOPE OF WORK.

mi-TECH
(920)465-8018
GREEN BAY, BROWNSVILLE, NEW BERLIN & MINNEAPOLIS

LEGEND

JOINT POLE
NEW JOINT POLE
POWER POLE
NEW POWER POLE
BORE PIT
EXISTING PEDESTAL
NEW PEDESTAL
FIBER SLACK LOOP
ELECTRIC PEDESTAL
RISER POLE
ANCHOR & DOWNGUY
NEW ANCHOR & DOWNGUY
JOINT ANCHOR
NEW JOINT ANCHOR
TEL CABINET
CALL BOX
STORM DRAIN
UTILITY VALVE
MANHOLE
EXISTING FIBER COIL
NEW FIBER COIL
EXISTING VAULT
NEW CHARTER VAULT
SHRUBS
DECIDUOUS TREE
GROUND
NEW GROUND
PROPERTY LINE
ROADWAY CENTERLINE
FIBER WARNING SIGN
TRAFFIC LIGHT
HYDRANT
SIGNS
STREET LIGHT
FIBER SPLICE CASE

LINETYPES

NEW UNDERGROUND CABLE
PROPOSED FIBER
GAS
WATER
ELECTRICAL
STORM
SANITARY
CABLE TV
TELEPHONE

PROJECT #6181130
PERMIT I.D. #6181130CITY

Spectrum
1228 12TH AVE S
ONALASKA, WI 54650

N

ADDRESS	LOCATION
W6190 BLUFF PASS	LA CROSSE, WI
FIELDED BY: DATE:	
DRAFTED BY: MP DATE: 8/19/2025	
DESIGNED BY: DATE:	
ASBUILTS BY: DATE:	

1

REVOCABLE OCCUPANCY / STREET PRIVILEGE PERMIT APPLICATION
FOR COMMUNICATIONS (FIBER OPTICS, TELEPHONE, CABLE, ETC.)
City of La Crosse Engineering Department
Phone: 608-789-7505 Email: engineering@cityoflacrosse.org http://cityoflacrosse.org

Encroachment Owner: Perry McClellan-Charter Communications #6181130
Address: 1228 12th Ave S City: Onalaska State: WI Zip: 54650
Phone # 715-519-0033 608-783-8122 Email Address Perry.McClellan@charter.com

Application Preparer (if different from above) Michele Peterson-Mi-Tech Services
Relationship with Owner: contractor for design and permitting
Phone # 920-924-3690 ext 3528 Email Address mpeterso@mi-tech.us

Description of Proposed Encroachment:

bore new conduit, place new ped

Encroachment Addresses (List by Street and 100 blocks):

W6190 Bluff Pass

I certify that I have reviewed the Municipal Code and understand all that is related to this permit request. I further certify that I have the full authority to make the foregoing application; the information in the application and the required submittals are complete and correct; the Work or Use performed shall comply with all the laws of the State of Wisconsin, and all ordinances, rules, regulations, policies and special conditions of the City of La Crosse. The applicant agrees to perform the work covered by an approved permit with diligence and convenience to the public. **See Sheet 2 of 2 for Additional Conditions.**

Signature of Owner or designee: Perry McClellan Date: 8/19/2025
Print Name and Title: Perry McClellan Construction Coordinator

Please return this completed application along with required information and fees noted on checklist below to: City of La Crosse, Engineering Department, 400 La Crosse Street, La Crosse, WI 54601. You will then be given notice of when your request will be on the Board of Public Works agenda for consideration. **Average completion time for validation 45 days.**

BELOW THIS LINE TO BE COMPLETED BY CITY STAFF ONLY

Required items to be provided by Applicant:

- Scale Drawing of encroachments (Complete Utility Locate by Digger's Hotline Requried) ☐
- Certificate of Insurance (City as additional Insured) ☐
- Initial Application Fee $ 100.00 ☐
- City Utility Potential Conflict Notification and Sign-Off ☐

Board of Public Works Approval Date:

Encroachment Type:

Permit Number:

All Fees are Non-Refundable & Subject to change by City Council