SOUTH LA CROSSE SHELL

PROJECT GENERAL NOTES

A. IN ADDITION TO THE GENERAL NOTES LISTED HEREIN, THE LATEST EDITION OF AIA DOCUMENT A201 GENERAL CONDITIONS OF THE CONTRACT FOR CONSTRUCTION SHALL APPLY.
B. WORK SHALL BE IN ACCORDANCE WITH FEDERAL, STATE AND LOCAL CODES, ORDINANCES, LAWS AND REQUIREMENTS.
C. WORK, WHEN COMPLETED, SHALL CONFORM TO THE AMERICANS WITH DISABILITIES ACT AND LOCAL ACCESSIBILITY REQUIREMENTS.
D. THE CONSTRUCTION DOCUMENTS ARE COMPLEMENTARY, AND WHAT IS REQUIRED BY ONE SHALL BE AS BINDING AS IF REQUIRED BY ALL. COORDINATE PORTIONS OF WORK AS DESCRIBED IN THE CONSTRUCTION DOCUMENTS.
E. THE CONSTRUCTION DOCUMENTS, AS DEFINED BY THE DRAWING AND SPECIFICATION INDEX, ARE NECESSARY TO DEFINE THE TOTAL PROJECT. PARTIAL PLANS OR SPECIFICATIONS SHOULD NOT BE ISSUED BY ANY PARTIES FOR BIDDING OR CONSTRUCTION.
F. IT IS THE INTENT OF THE CONSTRUCTION DOCUMENTS TO DESCRIBE A COMPLETE AND FINISHED PROJECT, OTHER THAN ITEMS NOTED "NIC" (NOT IN CONTRACT). ERRORS, OMISSIONS AND INCONSISTENCIES THAT MAY OCCUR BETWEEN THE CONSTRUCTION DOCUMENTS AND/OR EXISTING CONDITIONS SHALL BE BROUGHT IMMEDIATELY TO THE ATTENTION OF THE ARCHITECT IN WRITING AND WRITTEN INSTRUCTIONS SHALL BE OBTAINED PRIOR TO PROCEEDING WITH THE WORK. THE GENERAL CONTRACTOR SHALL BE HELD RESPONSIBLE FOR THE RESULTS OF ANY ERRORS, DISCREPANCIES AND/OR OMISSIONS WHICH THE GENERAL CONTRACTOR FAILED TO NOTIFY THE ARCHITECT PRIOR TO CONSTRUCTION AND/OR FABRICATION OF THE WORK.
G. GENERAL CONTRACTOR SHALL INCLUDE AND PROVIDE ALL LABOR, MATERIALS, EQUIPMENT, TRANSPORTATION AND PAY EXPENSES INCURRED IN THE PROPER COMPLETION OF WORK UNLESS SPECIFICALLY NOTED TO BE THE WORK OF OTHERS. GENERAL CONTRACTOR SHALL PERFORM WORK NECESSARY FOR PRODUCTION OF A COMPLETE, HABITABLE PROJECT AS DEFINED BY THE SCOPE OF WORK.
H. DO NOT SCALE DRAWINGS. BIDDER (CONTRACTOR) SHALL VERIFY CONDITIONS AND DIMENSIONS AT JOB SITE PRIOR TO START OF CONSTRUCTION. IF DISCREPANCIES ARE FOUND, WHETHER BUILT OR NOT, THE ARCHITECT SHALL BE NOTIFIED FOR CLARIFICATION BEFORE COMMENCING WORK.
I. THE STATED DIMENSIONS SHALL TAKE PRECEDENCE OVER GRAPHIC. THE ARCHITECT SHALL BE NOTIFIED OF ANY DISCREPANCIES.
J. NOTE THAT ERRORS IN THE TRANSMISSION OR REPRODUCTION OF THESE CONSTRUCTION DOCUMENTS COULD RESULT IN ALTERATIONS TO LINE TYPES, THICKNESSES, TONES, COLORS, HATCH PATTERNS AND SCALE. WILKUS ARCHITECTS IS NOT RESPONSIBLE FOR ANY CLAIMS, DAMAGES OR EXPENSES ARISING FROM THE UNAUTHORIZED USE OF THE INFORMATION CONTAINED WITHIN.
K. IF THE CONSTRUCTION DOCUMENTS APPEAR TO BE UNCLEAR, AMBIGUOUS OR CONTRADICTORY, AND IN THE EVENT THAT THE CONTRACTOR, OR SUBCONTRACTOR, DETERMINES CLARIFICATION OR INTERPRETATION BY THE ARCHITECT IS REQUIRED, THE GENERAL CONTRACTOR SHALL SUBMIT A REQUEST FOR INFORMATION IN WRITING TO THE ARCHITECT PRIOR TO START OF THE WORK.
   a. REQUESTS FOR INFORMATION MAY ONLY BE MADE BY THE GENERAL CONTRACTOR. THE GENERAL CONTRACTOR SHALL CLEARLY AND CONCISELY SET FORTH THE ISSUE FOR WHICH CLARIFICATION IS SOUGHT AND WHY A RESPONSE IS NEEDED FROM THE ARCHITECT AND/OR CONSULTANTS. IN THE REQUEST FOR INFORMATION, THE CONTRACTOR SHALL SET FORTH AN UNDERSTANDING OF THE REQUIREMENT, ALONG WITH A REASON WHY SUCH AN UNDERSTANDING WAS REACHED.
   b. THE ARCHITECT WILL REVIEW THE REQUEST FOR INFORMATION TO DETERMINE IF IT IS WITHIN THE MEANING OF THIS TERM. IF THE ARCHITECT DETERMINES THAT IT IS NOT A REQUEST FOR INFORMATION, IT WILL BE RETURNED TO THE CONTRACTOR UNREVIEWED AS TO CONTENT OR FOR RE-SUBMITTAL IN THE PROPER FORM AND MANNER.
   c. RESPONSES TO REQUESTS FOR INFORMATION SHALL BE ISSUED UPON RECEIPT, BUT NO LATER THAT FIVE WORKING DAYS OF RECEIPT, UNLESS IT IS DETERMINED THAT A LONGER PERIOD OF TIME IS NEEDED IN ORDER TO PROVIDE ADEQUATE RESPONSE. IF A LONGER PERIOD OF TIME IS NECESSARY, THE ARCHITECT WILL, WITHIN FIVE WORKING DAYS OF THE RECEIPT OF THE REQUEST FOR INFORMATION, NOTIFY THE GENERAL CONTRACTOR OF THE ANTICIPATED RESPONSE TIME.
   d. IF THE REQUEST FOR INFORMATION IS SUBMITTED WITH FIVE WORKING DAYS OR LESS FLOAT ON THE PROJECT SCHEDULE, THE CONTRACTOR SHALL NOT BE ENTITLED TO ANY TIME EXTENSION DUE TO THE TIME REQUIRED TO REVIEW AND RESPOND. PROVIDED A RESPONSE IS GIVEN WITHIN THE FIVE WORKING DAYS AS SET FORTH ABOVE.
   e. RESPONSES FROM THE ARCHITECT ARE NOT INTENDED TO CHANGE ANY OF THE REQUIREMENTS OF THE CONSTRUCTION DOCUMENTS. IN THE EVENT THAT THE CONTRACTOR BELIEVES A RESPONSE WILL CAUSE A CHANGE TO THE REQUIREMENTS OF THE CONSTRUCTION DOCUMENTS, THE CONTRACTOR SHALL IMMEDIATELY GIVE WRITTEN NOTICE TO THE ARCHITECT AND CLIENT STATING THAT THEY CONSIDER THE RESPONSE TO BE A CHANGE ORDER. FAILURE TO GIVE SUCH WRITTEN NOTICE IMMEDIATELY SHALL WAIVE THE CONTRACTORS RIGHT TO SEEK ADDITIONAL TIME AND/OR COST.
L. ANY DIMENSIONS, DETAILS, NOTES AND/OR SYMBOLS THAT APPLY TO ONE UNIT, APPLY TO ALL UNITS IN LIKE SITUATIONS, UNLESS NOTED OTHERWISE.
M. FOR THE PURPOSE OF THESE DOCUMENTS, "INSTALL" SHALL MEAN TO PROVIDE FASTENERS, MISCELLANEOUS HARDWARE, BLOCKING, ELECTRICAL CONNECTIONS, PLUMBING CONNECTIONS AND ANY OTHER ITEMS REQUIRED FOR A COMPLETE AND OPERATIONAL INSTALLATION, UNLESS NOTED OTHERWISE.
N. FOR THE PURPOSE OF THESE DOCUMENTS, "BY GC" WILL REFER TO ITEMS PROVIDED AND INSTALLED BY THE GENERAL CONTRACTOR, THEIR SUBCONTRACTORS AND/OR AGENTS. THE TERM "BY CLIENT" WILL REFER TO ITEMS PROVIDED BY THE CLIENT AND INSTALLED BY THE GENERAL CONTRACTOR.
O. PRODUCTS THAT HAVE BEEN USED IN PREPARING THESE DOCUMENTS, ARE TO ESTABLISH MINIMUM QUALITIES. PROPOSED SUBSTITUTIONS MUST MEET THESE QUALITIES, OR BETTER, TO BE CONSIDERED ACCEPTABLE. THE BURDEN OF PROOF OF EQUALITY RESTS WITH THE GENERAL CONTRACTOR. ADEQUATE SUPPORTING DOCUMENTATION MUST ACCOMPANY SUBSTITUTION REQUEST SUBMITTALS, WHICH MUST BE SUBMITTED TO THE ARCHITECT FOR APPROVAL PRIOR TO BIDDING. SEE SPECIFICATIONS FOR ADDITIONAL INFORMATION.
P. GENERAL CONTRACTOR SHALL VISIT THE PROJECT SITE PRIOR TO SUBMISSION OF BID AND BEGINNING OF ANY WORK TO EXAMINE AND COMPARE THE DRAWINGS AND SPECIFICATIONS TO THE EXISTING CONDITIONS AND BE KNOWLEDGEABLE OF WORK TO BE PERFORMED. NOTIFY ARCHITECT IMMEDIATELY OF ANY DISCREPANCIES.
Q. NOTIFY ALL PARTIES IF HAZARDOUS MATERIALS ARE SUSPECTED OR FOUND TO BE PRESENT.
R. NOTIFY ARCHITECT IMMEDIATELY OF EXISTING CONDITIONS THAT ARE EXPOSED DURING CONSTRUCTION THAT MAY IMPACT ANY PROPOSED NEW WORK.
S. GENERAL CONTRACTOR TO PROVIDE TEMPORARY BARRICADES, WINDOW BLACKOUTS AND DUST CONTROL AS REQUIRED BY CLIENT, LANDLORD OR AUTHORITY HAVING JURISDICTION FOR THE DURATION OF CONSTRUCTION.
T. VEHICULAR ACCESS MUST BE PROVIDED AND MAINTAINED SERVICEABLE THROUGHOUT CONSTRUCTION.
U. THROUGHOUT THE PROJECT, THE GENERAL CONTRACTOR SHALL CLOSELY SUPERVISE THE WORK OF SUBCONTRACTORS AND SHALL BE SOLELY RESPONSIBLE FOR CONSTRUCTION MEANS, METHODS AND TECHNIQUES, INCLUDING SAFETY PROCEDURES AND FOR COORDINATING/SEQUENCING TRADES.
V. GENERAL CONTRACTOR SHALL TAKE OUT ANY NECESSARY TRADE-LEVEL PERMITS, INSURANCE, LICENSES, BONDS AND CERTIFICATES AND PAY ALL FEES CONNECTED TO THE WORK DESCRIBED HEREIN.
W. ALL CONTRACTORS FOR THE WORK ARE REQUIRED TO HAVE INSURANCE OF ALL TYPES AND LIMITS, AS REQUIRED FOR THIS PROJECT.
X. REFER TO ENGINEERED CONSTRUCTION DOCUMENTS BY OTHERS FOR ADDITIONAL PERTINENT INFORMATION.
Y. REFER TO INDIVIDUAL DRAWINGS WITHIN THIS SET OF CONSTRUCTION DOCUMENTS FOR ADDITIONAL GENERAL NOTES.
Z. GENERAL CONTRACTOR IS RESPONSIBLE TO CONTACT LANDLORD TO VERIFY, COORDINATE AND COMPLY, DURING THE BIDDING PHASE, WITH REQUIREMENTS INCLUDING, BUT NOT LIMITED TO BARRICADES, STAGING, CONSTRUCTION PROCEDURES, USE OF MANDATED SUBCONTRACTORS, DEBRIS REMOVAL, RESTRICTED HOURS OF CONSTRUCTION, SECURITY, UTILITIES, ETC.
AA. GENERAL CONTRACTOR SHALL FURNISH AND INSTALL ITEMS WHICH ARE OBVIOUS AND NECESSARY TO ENSURE QUALITY WORKMANSHIP AND INSTALLATION, EVEN IF NOT SPECIFICALLY MENTIONED IN THE DRAWINGS, INCLUDING BUT NOT LIMITED TO BLOCKING AND BRACING.
BB. ANY DEVIATION FROM THESE CONSTRUCTION DOCUMENTS ON THE PART OF THE GENERAL CONTRACTOR, ANY SUBCONTRACTOR, VENDOR AND/OR SUPPLIER, OR USE OF THESE CONSTRUCTION DOCUMENTS FOR USE AT ANY LOCATION OTHER THAN THAT FOR WHICH THEY WERE INTENDED, SHALL RELEASE WILKUS ARCHITECTS, AND ITS SUBSIDIARIES, AND THEIR OFFICERS, DIRECTORS, SHAREHOLDERS, AGENTS, EMPLOYEES, REPRESENTATIVES, SUCCESSORS AND ASSIGNEES, FROM ANY AND ALL LIABILITY INCURRED IN LITIGATION OR OTHERWISE WITH RESPECT TO THE CONSTRUCTION OF THIS PROJECT.
CC. GENERAL CONTRACTOR IS RESPONSIBLE FOR THEIR WORK AND THAT OF THEIR SUBCONTRACTORS FOR THE LOSSES AND DAMAGES TO EQUIPMENT, EXISTING CONSTRUCTION, TOOLS AND MATERIALS USED IN CONJUNCTION WITH THE WORK, FOR THE ACTS OF THEIR EMPLOYEES AND SUBCONTRACT WORKERS.
DD. GENERAL CONTRACTOR SHALL ADHERE AND COMPLY WITH FEDERAL, STATE AND LOCAL REGULATIONS REGARDING JOB SAFETY.
EE. GENERAL CONTRACTOR IS RESPONSIBLE TO CARRY WORKER'S COMPENSATION AS REQUIRED BY LAW AND/OR GOVERNING AUTHORITY.
FF. GENERAL CONTRACTOR IS RESPONSIBLE FOR THE SAFETY AND CARE OF ADJACENT PROPERTIES DURING CONSTRUCTION.
GG. GENERAL CONTRACTOR IS RESPONSIBLE FOR MAINTAINING A COMPLETE AS-BUILT SET OF CONSTRUCTION DRAWINGS AT THE JOB SITE AND TURNING THE AS-BUILT DRAWINGS OVER TO THE CLIENT UPON COMPLETION OF THE PROJECT.
HH. THE APPROVED PLANS (FOR CONSTRUCTION SET) SHALL BE KEPT ON SITE AT ALL TIMES, INCLUDING ALL ADDENDA, SUPPLEMENTAL INSTRUCTIONS, CHANGE ORDERS, COPIES OF APPROVED SUBMITTALS, ETC.
II. IF REQUIRED, THE GENERAL CONTRACTOR SHALL PROVIDE SCHEDULING AND/OR COORDINATION WITH THE APPROPRIATE REPRESENTATIVE FOR THE FOLLOWING INSTALLATIONS OR PROCEDURES:
   a. INSTALLATION OF CONDUIT AND PIPING IN OR BELOW THE FLOOR SLAB.
   b. CONNECTIONS TO DOMESTIC WATER, SANITARY AND GREASE WASTE, AND SANITARY VENT.
   c. ANY WORK REQUIRED AT THE BUILDING SWITCHGEAR.
   d. UPON SUBSTANTIAL COMPLETION OF WORK IN THE PREMISES, CLIENT AND THE CONTRACTOR MUST SCHEDULE A FINAL INSPECTION AND PREPARE A PUNCHLIST WHICH ENUMERATES ANY AREAS OF CONSTRUCTION, FIXTURING, LIGHTING OR LAMPING, MERCHANDISING, ETC., THAT ARE NOT IN ACCORDANCE WITH THE CONSTRUCTION DOCUMENTS. ANY STOREFRONT BARRICADE MAY NOT BE REMOVED UNTIL THE INSPECTION AND REQUIRED CORRECTIONS HAVE BEEN COMPLETED.
   e. PROVIDE LANDLORD REQUIRED PROOF OF BUILDERS RISK INSURANCE AND DAMAGE DEPOSIT PRIOR TO BEGINNING OF ANY SELECTIVE DEMOLITION OR CONSTRUCTION PROCEDURES.
   f. PROVIDE REQUIRED PROOF OF BUILDERS RISK INSURANCE AND DAMAGE DEPOSIT PRIOR TO BEGINNING OF ANY SELECTIVE DEMOLITION OR CONSTRUCTION PROCEDURES.
JJ. GENERAL CONTRACTOR TO VERIFY REQUIREMENTS TO MAINTAIN ROOF WARRANTY. ANY ROOF PATCHING SHALL RETURN THE AFFECTED AREA TO A "LIKE NEW" CONDITION.
KK. GENERAL CONTRACTOR ASSUMES COMPLETE RESPONSIBILITY WHEN CLIENT FURNISHED ITEMS ARE ACCEPTED AND RECEIVED BY THE GENERAL CONTRACTOR OR THEIR AGENTS.
LL. PROVIDE PROTECTION FOR EXISTING OR NEWLY INSTALLED SYSTEMS AND FINISHES FOR THE DURATION OF CONSTRUCTION.
MM. GENERAL CONTRACTOR TO INSTALL DUST PROOFING AND/OR RIGID BARRIERS AS APPROPRIATE TO DEFINE VARIOUS SEGMENTS. BARRIERS TO MAINTAIN EXITING, MECHANICAL, AND FIRE/LIFE SAFETY REQUIREMENTS FOR BUILDING OCCUPANTS.
NN. GENERAL CONTRACTOR IS RESPONSIBLE FOR INSPECTION OF PORTIONS OF WORK ALREADY PERFORMED TO DETERMINE THAT SUCH PORTIONS ARE IN PROPER CONDITION TO RECEIVE SUBSEQUENT WORK.
OO. MOLD AND MOISTURE MITIGATION - GENERAL CONTRACTOR TO COORDINATE AND ENSURE THAT ANY AREA OF THE BUILDING, MATERIAL, OR ASSEMBLY WITHIN THE BUILDING ENVELOPE IS THOROUGHLY CLEANED AND DRY BEFORE BEING COVERED BY CONSTRUCTION. ANY MOLD, MILDEW OR OTHER MOISTURE CONDITION DEVELOPED WITHIN THE SCOPE OF WORK OF THIS CONTRACT SHALL BE CORRECTED AND/OR MITIGATED BY THE GENERAL CONTRACTOR PRIOR TO ADDITIONAL WORK.
PP. CONTACT BETWEEN DISSIMILAR METALS SHALL BE LIMITED. WHEN REQUIRED, THE CONTACT SHALL BE PROTECTED AS REQUIRED.
QQ. REMOVE COMBUSTIBLE RUBBISH DURING CONSTRUCTION FROM THE PROJECT LIMITS CONTINUOUSLY AND DISPOSE OF IN A LEGAL MANNER.
RR. VENDORS ARE RESPONSIBLE FOR DISPOSAL OF SHIPPING/CRATING MATERIALS. VERIFY WITH THE GENERAL CONTRACTOR THE USE OF THE DUMPSTER ON SITE. SUBCONTRACTORS MUST DISPOSE OF THEIR CONSTRUCTION DEBRIS. IF NOT COMPLETED, IT WILL BE COMPLETED AND BACK CHARGED FOR CLEANING. COORDINATE DISPOSAL WITH JOB SUPERINTENDENT.
SS. AT THE TIME OF PROJECT COMPLETION, THE PROJECT LIMITS ARE TO BE THOROUGHLY CLEANED PRIOR TO TURNOVER TO CLIENT.

ABBREVIATIONS

℄	CENTER LINE
@	AT
ACT	ACOUSTIC CEILING TILE
ADJ	ADJACENT
AFF	ABOVE FINISH FLOOR
APX	APPROXIMATELY
BD	BOARD
BLDG	BUILDING
BLKG	BLOCKING
BO	BOTTOM OF
CLG	CEILING
CMU	CONCRETE MASONRY UNIT
COL	COLUMN
CONC	CONCRETE
CONT	CONTINUOUS
DIM	DIMENSION(S)
DWG	DRAWING
EA	EACH
ELEC	ELECTRICAL
ELEV	ELEVATION
EQ	EQUAL
EXIST	EXISTING
EXT	EXTERIOR
FIN	FINISH
FLR	FLOOR
FOS	FACE OF STUD
FOSF	FACE OF STOREFRONT
FOW	FACE OF WALL
FRP	FIBERGLASS REINFORCED PANEL
FT	FEET
GC	GENERAL CONTRACTOR
GWB	GYPSUM WALL BOARD
HGT	HEIGHT
HORIZ	HORIZONTAL
HVAC	HEATING, VENTILATION & AIR CONDITIONING
INSUL	INSULATION
MANUF	MANUFACTURER
MAX	MAXIMUM
MECH	MECHANICAL
MIN	MINIMUM
MISC	MISCELLANEOUS
MTL	METAL
N/A	NOT APPLICABLE
NIC	NOT IN CONTRACT
OC	ON CENTER
OPNG	OPENING
PLMBG	PLUMBING
PLYWD	PLYWOOD
RDL	RAIN DRAIN LEADER
REQ'D	REQUIRED
REV	REVERSE
SHT	SHEET
SIM	SIMILAR
SPEC	SPECIFICATION
SQ FT	SQUARE FEET
STD	STANDARD
STL	STEEL
STRUC	STRUCTURAL
SUSP	SUSPENDED
T.O.	TOP OF
TYP	TYPICAL
UNO	UNLESS NOTED OTHERWISE
VERT	VERTICAL
VIF	VERIFY IN FIELD
VTK	VIRTUAL TRAINER KIOSK
W/	WITH
WD	WOOD

© COPYRIGHT WILKUS ARCHITECTS

SITE MAP

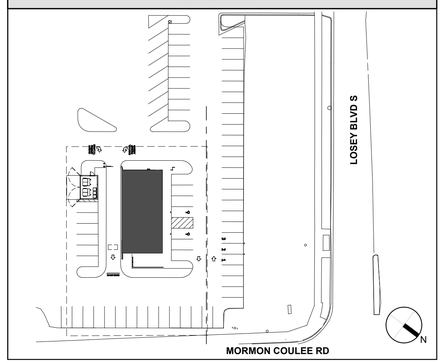

LOCATION MAP

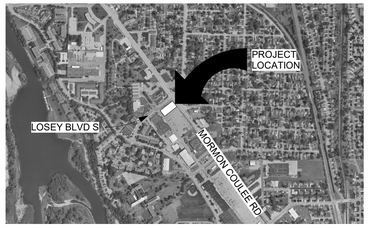

SYMBOL LEGEND

1 A101 1	ELEVATION MARKER	0	GRIDLINE
1 A101 SIM	SECTION MARKER	ROOM NAME 101	ROOM NAME & NUMBER
1 A101 SIM	SECTION / DETAIL	1	REVISION
1 VIEW NAME SCALE:1/8" = 1'-0"	VIEW LABEL	101	DOOR TAG
X	KEY NOTE	N	NORTH ARROW
FR0	FRAME		DIMENSION TARGET
	LEVEL TARGET	XX-X	FINISH TAG
		℄	CENTERLINE

PROJECT DATA

PROJECT :	SOUTH LA CROSSE SHELL BUILDING
ADDRESS :	MORMON COULEE RD & LOSEY BLVD S, LA CROSSE, WI 54601
ZONING :	X4-OTHER
CURRENT USE :	VACANT
OCCUPANCY TYPE :	(FUTURE) ASSEMBLY GROUP A-2
PARCEL ID :	17-40381-110

SCOPE OF WORK

NEW FREESTANDING COLD, DARK SHELL BUILDING FOR FUTURE QUICK SERVE RESTAURANT. WORK INCLUDES, BUT NOT LIMITED TO, SITE WORK, BUILDING ENVELOPE AND STRUCTURAL.

INTERIOR BUILD-OUT (TENANT) PLANS WILL BE SUBMITTED AT A LATER DATE WHICH WILL INCLUDE COMPLETE SUBMITTAL AS APPLICABLE.

PROJECT TEAM

CLIENT/LANDLORD
ALLIANCE DEVELOPMENT
230 N OHIO ST, SUITE 200
OSHKOSH, WI 54902

CONTACT: FRED JACQUES
E: fred@alliancedevelopment.biz
P: (612) 313-0126

CIVIL
CONTOUR CIVIL & DEVELOPMENT
PO BOX 89
ROCKFORD, MN 55373

CONTACT: JOSEPH RADACH PE
E: jradach@contourcd.com
P: (612) 730-2265

ARCHITECT
WILKUS ARCHITECTS, P.A.
15 NINTH AVENUE NORTH
HOPKINS, MN 55343

CONTACT: SAMANTHA STUMPNER
E: sas@wilkusarch.com
P: (952) 592-5086

STRUCTURAL
VAA ENGINEERING
2300 BERKSHIRE LANE N, SUITE 200
PLYMOUTH, MN 55441

CONTACT: TERRY MAHR
E: tmahr@vaaeng.com
P: (763) 577-9119

MPE ENGINEER
DUNHAM ENGINEERING
50 SOUTH SIXTH STREET, SUITE 1100
MINNEAPOLIS, MN 55401

CONTACT: THEO BIRKHOLZ
E: Theo.Birkholz@dunhameng.com
P: (612) 465-7676

MATERIAL HATCHES

BATT INSULATION
EIFS
CONCRETE
BRICK MASONRY
FINISHED WOOD
PLYWOOD
GYPSUM BOARD
CONCRETE MASONRY
STEEL
RIGID INSULATION / EXTERIOR INSULATION FINISH SYSTEM (E.I.F.S.)
EARTH
ALUMINUM
SAND / GROUT

SHEET INDEX

SHEET #	SHEET NAME	REVISION #
GENERAL		
G000	COVER SHEET	
G001	CODE ANALYSIS - LIFE SAFETY PLAN	
SPECIFICATIONS		
G010	ARCHITECTURAL SPECIFICATIONS	
G011	ARCHITECTURAL SPECIFICATIONS	
G012	ARCHITECTURAL SPECIFICATIONS	
G013	ARCHITECTURAL SPECIFICATIONS	
G014	ARCHITECTURAL SPECIFICATIONS	
G015	ARCHITECTURAL SPECIFICATIONS	
CIVIL		
C0.0	TITLE SHEET	
-	ALTA/NSPS LAND TITLE SURVEY	
C1.1	EXISTING CONDITIONS & REMOVALS PLAN	
C2.1	SITE PLAN	
C3.1	UTILITY PLAN	
C4.1	GRADING AND DRAINAGE PLAN	
C5.1	EROSION CONTROL PLAN, PHASE I	
C5.2	EROSION CONTROL PLAN, PHASE II	
C5.3	SWPPP	
C6.1	DETAILS	
C6.2	DETAILS	
C6.3	DETAILS	
C6.4	DETAILS	
L1.1	LANDSCAPE PLAN	
ARCHITECTURAL		
SP100	ARCHITECTURAL SITE PLAN	
SP101	TRASH ENCLOSURE PLAN & DETAILS	
A100	ARCHITECTURAL SHELL PLAN	
A140	ARCHITECTURAL ROOF PLAN	
A301	EXTERIOR ELEVATIONS	
A401	BUILDING SECTIONS	
A402	BUILDING SECTIONS	
A403	WALL SECTIONS	
A404	WALL SECTIONS	
A405	WALL SECTIONS	
A406	DETAILS	
A407	DETAILS	
A408	PLAN DETAILS	
A409	EIFS DETAILS	
A601	DOOR & WINDOW SCHEDULE	
A602	STOREFRONT DETAILS	
STRUCURAL		
S001	GENERAL STRUCTURAL NOTES	
S101	FOUNDATION PLAN	
S102	STRUCTURAL SITE DETAILS	
S201	ROOF FRAMING PLAN	
S501	FOUNDATION DETAILS	
S502	FOUNDATION DETAILS	
S503	ROOF FRAMING DETAILS	
S504	STRUCTURAL DETAILS	
MECHANICAL		
M0	MECHANICAL TITLE SHEET	
M1	MECHANICAL PLAN	
PLUMBING		
P1	PLUMBING PLAN	
P2	PLUMBING SPECIFICATIONS	
ELECTRICAL		
E0	ELECTRICAL SITE PLAN	
E1	LIGHTING & POWER PLAN	
E2	PANEL SCHEDULE AND DETAIL	
E3	ELECTRICAL SPECIFICATIONS	
E4	ELECTRICAL SPECIFICATIONS	

CONSULTANT

WILKUS ARCHITECTS

CLIENT

Alliance DEVELOPMENT

FRED JACQUES
ALLIANCE DEVELOPMENT
230 OHIO ST, SUITE 200
OSHKOSH, WI 54902
(612) 313-0126

PROJECT INFORMATION

SOUTH LA CROSSE SHELL
MORMON COULEE RD & LOSEY BLVD S
LA CROSSE, WI 54601

SEAL

NOT FOR CONSTRUCTION

PROJECT NO.	2025-0394
DRAWN BY	BEH
CHECKED BY	SAS

ISSUE	DATE
PERMIT SET	01/09/2026

REVISION	DATE

TITLE:

COVER SHEET

SHEET NUMBER:

G000

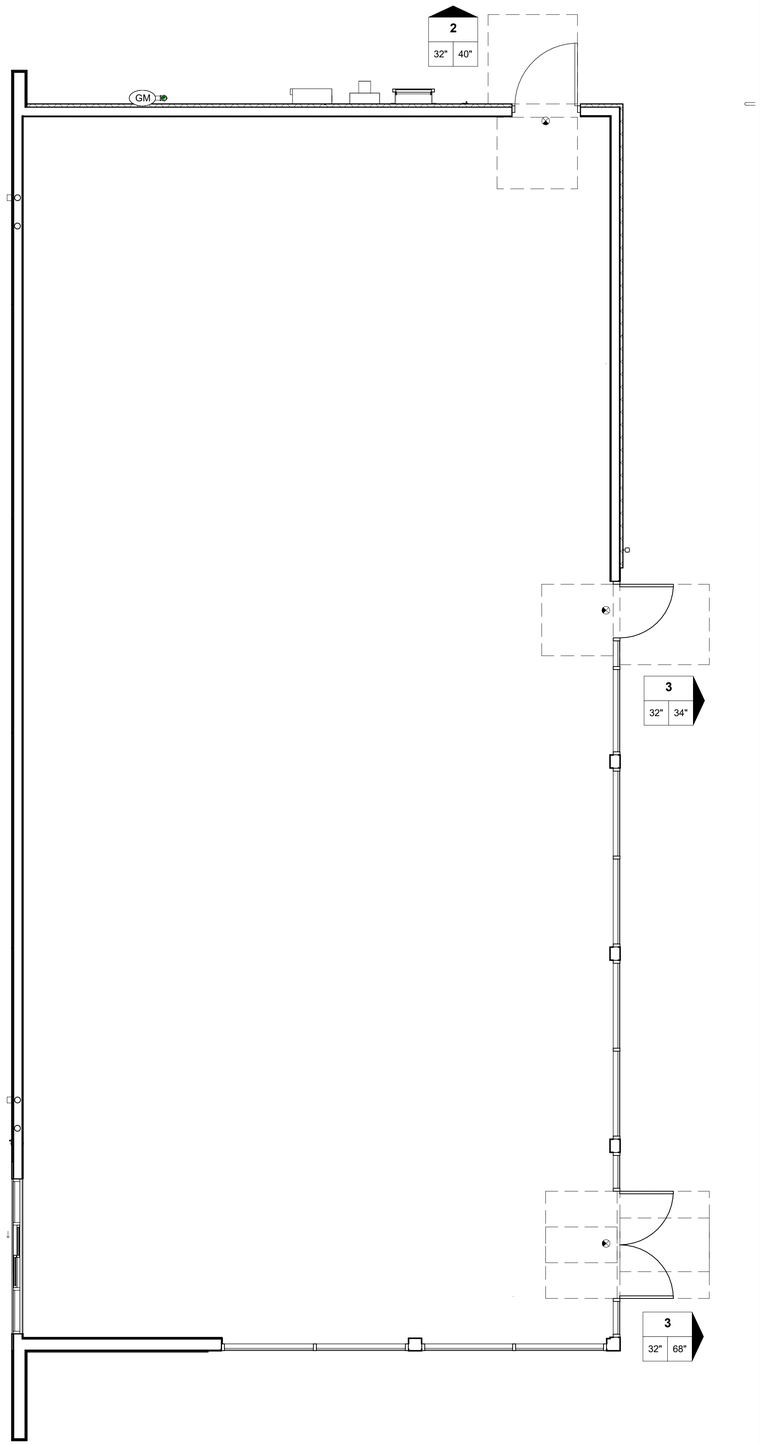

1 LIFE SAFETY PLAN

SCALE: 1/4" = 1'-0"

N

LIFE SAFETY GENERAL NOTES

A. LIFE SAFETY SYSTEMS SHALL BE DESIGNED PER APPLICABLE FIRE PREVENTION CODE, ORDINANCE OR LAW.
B. POST "NO PARKING - FIRE LANE" SIGNS ALONG APPROVED VEHICULAR ACCESS ROADS. COORDINATE LOCATIONS WITH LOCAL AUTHORITY HAVING JURISDICTION.
C. AN ALL WEATHER FIRE ACCESS ROAD SHALL BE IN PLACE BEFORE ANY COMBUSTIBLE MATERIALS ARE PLACED ON SITE. COORDINATE WITH LOCAL AUTHORITY HAVING JURISDICTION.
D. FIRE APPARATUS ACCESS ROADS SHALL BE UNOBSTRUCTED. ACCESS GATES SHALL BE APPROVED PRIOR TO INSTALLATION AND SHALL BE IN COMPLIANCE WITH O.S.H.A. GUIDELINES.
E. COMMERCIAL DUMPSTERS OR CONTAINERS WITH A CAPACITY OF ONE AND A HALF CUBIC YARDS OR GREATER SHALL NOT BE STORED OR PLACED WITHIN FIVE FEET OF COMBUSTIBLE WALLS OR OPENINGS, UNLESS THESE AREAS ARE PROTECTED BY AN APPROVED AUTOMATIC FIRE SPRINKLER SYSTEM.
F. BUILDING ADDRESS NUMBERS SHALL BE PROVIDED AT THE FRONT OF THE TENANT SPACE AND SHALL BE VISIBLE AND LEGIBLE FROM THE PUBLIC RIGHT-OF-WAY AND A MINIMUM OF 6" HIGH. NUMBERS SHALL CONTRAST WITH THEIR BACKGROUND. ADDRESS NUMBERS SHALL BE PROVIDED AND INSTALLED BY THE GENERAL CONTRACTOR.
G. THE ADDRESS SHALL BE PERMANENTLY POSTED ON UTILITY SERVICE DISCONNECTS IN NUMBERS A MINIMUM OF 1" TALL AND ON THE SERVICE DOOR IN NUMBERS A MINIMUM OF 4" TALL.
H. A KNOX BOX IS TO BE PROVIDED AND INSTALLED BY THE GENERAL CONTRACTOR. VERIFY WITH THE LOCAL AUTHORITY THIS REQUIREMENT AND COORDINATE LOCATION AS REQUIRED.
I. REQUIRED EGRESS DOORS SHALL BE OPENABLE FROM THE INSIDE WITHOUT THE USE OF A KEY OR ANY SPECIAL KNOWLEDGE OR EFFORT AND SHALL SWING IN THE DIRECTION OF EGRESS TRAVEL. SPECIAL LOCKING DEVICES SHALL BE OF AN APPROVED TYPE.
J. EXITS SHALL BE ILLUMINATED AT ANY TIME THE BUILDING IS OCCUPIED WITH LIGHTS HAVING AN INTENSITY OF NOT LESS THAN 11.0 LUX AT FLOOR LEVEL, OR AS DIRECTED BY LOCAL CODE.
K. EXIT SIGNS TO BE PROVIDED AND INSTALLED AS REQUIRED BY APPLICABLE CODES, ORDINANCES AND LAWS.
L. PROVIDE APPROVED EXITING ILLUMINATION AND ILLUMINATED EXIT SIGNS WHICH ARE POWERED FROM SEPARATE CIRCUITS AND COMPLY WITH THE BUILDING CODE.
M. OCCUPANT LOAD SIGN WITH MINIMUM 1" LETTERS AND NUMBERS SHALL BE POSTED NEAR MAIN EXIT.
N. EXIT LIGHTING AND SIGNS SHALL HAVE 6" HIGH LETTERING IN ACCORDANCE WITH LOCAL CODES. PROVIDE LOW LEVEL EXIT SIGNS PER CODE REQUIREMENTS.
O. FIRE DEPARTMENT FINAL INSPECTION REQUIRED.
P. EXITS, EXIT SIGNS, AND FIRE EXTINGUISHER LOCATIONS, SHALL NOT BE CONCEALED.
Q. FIRE EXTINGUISHER NOTES
   a. PROVIDE AND INSTALL FIRE EXTINGUISHERS NECESSARY DURING CONSTRUCTION AS DIRECTED BY AUTHORITY HAVING JURISDICTION.
   b. FINAL QUANTITY, LOCATIONS AND TYPES OF FIRE EXTINGUISHERS TO BE PROVIDED BY TENANT IN FUTURE FIT-OUT PACKAGE.

LIFE SAFETY LEGEND

EMERGENCY LIGHTING & EXIT SIGNS:

WALL MOUNTED EXIT SIGN

NOTE: ALL EXIT LIGHTS ON EXTERIOR DOORS SHALL HAVE AN EXTERIOR EMERGENCY REMOTE HEAD LINKED TO IT

EGRESS AT DOORS

00 — EGRESS BREAKDOWN: OCCUPANTS SERVED
0.0" — EXIT WIDTH REQUIRED
00" — EXIT WIDTH PROVIDED

CODE ANALYSIS

APPLICABLE CODES AND REGULATIONS

INCLUDES STATE AND LOCAL PROVISIONS TO THE BUILDING CODE	
BUILDING CODE:	2021 INTERNATIONAL BUILDING CODE
MECHANICAL CODE:	2021 INTERNATIONAL MECHANICAL CODE
PLUMBING CODE:	2018 WISCONSIN UNIFORM PLUMBING CODE
ENERGY CODE:	2021 INTERNATIONAL ENERGY CONSERVATION CODE
FUEL GAS CODE:	2021 INTERNATIONAL FUEL GAS CODE
ELECTRICAL CODE:	2017 NATIONAL ELECTRICAL CODE
FIRE CODE:	2021 INTERNATIONAL FIRE CODE
ACCESSIBILITY CODE(S):	2017 ICC/ANSI A117.1

BASIS OF DESIGN

CONSTRUCTION TYPE	TYPE V-B
OCCUPANCY CLASSIFICATION	A-2 (FUTURE)
AREA FACTOR	NON SPRINKLERED, SINGLE STORY
BUILDING AREA	2,385 SQ. FT.
OCCUPANT LOAD	8 OCC.

CH3 - USE AND OCCUPANCY CLASSIFICATION

OCCUPANCY GROUP & FUNCTION	GENERAL DESCRIPTION OF SITE
FUTURE A-2; RESTAURANT	SHELL BUILDING FOR FUTURE QUICK SERVE CASUAL RESTAURANT

CH5 - GENERAL BUILDING HEIGHTS & AREAS

OCCUPANCY CLASSIFICATION	A-2 (FUTURE)
TYPE OF CONSTRUCTION	V-B
ALLOWABLE BUILDING HEIGHT	40'-0"
PROPOSED BUILDING HEIGHT (PER CHAPTER 2 DEFINITION)	14'-8"
PROPOSED TOTAL BUILDING HEIGHT (TALLEST PARAPET)	18'-8"
Aa = ALLOWABLE AREA	Aa = 6,000 SQ. FT.
TOTAL BUILDING AREA (PROPOSED)	2,385 SQ. FT.

CH6 - TYPES OF CONSTRUCTION

FIRE RESISTANCE RATING REQUIREMENTS FOR BUILDING ELEMENTS		
CONSTRUCTION TYPE		TYPE V-B
BUILDING ELEMENT		**FIRE RATING REQUIRED**
PRIMARY STRUCTURAL FRAME		0 HOUR
BEARING WALLS	EXTERIOR	0 HOUR
	INTERIOR	0 HOUR
NON - BEARING WALLS	EXTERIOR	0 HOUR
NON - BEARING WALLS AND PARTITIONS	INTERIOR	0 HOUR
FLOOR CONSTRUCTION AND SECONDARY MEMBERS		0 HOUR
ROOF CONSTRUCTION AND SECONDARY MEMBERS		0 HOUR

CH9 - FIRE PROTECTION & LIFE SAFETY

SPRINKLER SYSTEM:	NON-SPRINKLERED
COMMENTS:	AUTOMATIC SPRINKLER SYSTEM NOT REQUIRED AS THE FIRE AREA DOES NOT EXCEED 5,000 SQ. FT. (464 M2).
FIRE ALARM & DETECTION SYSTEM:	FIRE ALARM SYSTEM NOT REQUIRED AS OCCUPANT LOAD DOES NOT EXCEED 300
FIRE EXTINGUISHERS:	G.C. TO VERIFY TYPE, LOCATION(S) AND QUANTITIES WITH THE LOCAL AHJ PRIOR TO ORDERING AND INSTALLING FIRE EXTINGUISHERS

CH10 - MEANS OF EGRESS

FUNCTION OF SPACE	SQ. FT.	SF / OCC.	OCC. LOAD
STORAGE	2,385	300 (GROSS)	8
		TOTAL OCCUPANT LOAD:	8

EGRESS REQUIREMENTS				
	FACTOR	OCC. LOAD	REQ'D WIDTH	PROP. WIDTH
EXIT DOORS	0.2	8	32"	142"
	1 REQUIRED		3 PROVIDED	

CH17 SPECIAL INSPECTIONS AND TESTS

REQUIRED STRUCTURAL SPECIAL INSPECTIONS:

REFER TO STRUCTURAL PLANS FOR THIS INFORMATION.

REQUIRED NON-STRUCTURAL SPECIAL INSPECTIONS:

INSPECTION:	COMMENTS:
EIFS WATER-RESISTIVE BARRIER COATING	2021 IBC 1705.17.1

NOTE: ADDITIONAL SPECIAL INSPECTIONS MAY BE REQUIRED BY THE LOCAL AHJ THAT ARE OUTSIDE THE SCOPE OF THESE PLANS.

CH29 - PLUMBING SYSTEMS

FINAL FIXTURE COUNTS ARE TO BE DETERMINED BY TENANT BUILD-OUT PLANS WHICH WILL BE UNDER A SEPARATE SUBMITTAL

ENERGY CODE

CLIMATE ZONE / COUNTY:	5A / LA CROSSE COUNTY	
BUILDING COMPONENT	CODE MINIMUM	PROVIDED
ROOF, ABOVE DECK:	R-30ci	R-30ci
ROOF, ATTIC:	R-49	R-49
WALLS - ABOVE GRADE:	R-20 + R-3.8ci	R-20 + R-5ci
SLAB-ON-GRADE:	R-15 FOR 24"	R-15 FOR 24"
OPAQUE SWINGING DOORS:	U-0.37	U-0.37
FIXED FENESTRATION:	U-0.36	U-0.36
ENTRANCE DOORS:	U-0.63	U-0.63

CONSULTANT

WILKUS ARCHITECTS

CLIENT

Alliance DEVELOPMENT

FRED JACQUES
ALLIANCE DEVELOPMENT
230 OHIO ST, SUITE 200
OSHKOSH, WI 54902
(612) 313-0126

PROJECT INFORMATION

SOUTH LA CROSSE SHELL

MORMON COULEE RD & LOSEY BLVD S
LA CROSSE, WI 54601

SEAL

NOT FOR CONSTRUCTION

PROJECT NO.	2025-0394
DRAWN BY	BEH
CHECKED BY	SAS

ISSUE	DATE
PERMIT SET	01/09/2026

REVISION	DATE

TITLE:

CODE ANALYSIS - LIFE SAFETY PLAN

SHEET NUMBER:

G001

© COPYRIGHT WILKUS ARCHITECTS

DIVISION 1 - GENERAL REQUIREMENTS

SECTION 01100 - SUMMARY

1.1 Contract Documents:

A. Contractor shall use the following Owner provided documents in the negotiation and execution of the Work. Contact Owner office for copies of these documents:
   1. Owner Instructions to Bidders.
   2. Construction Contract for Owner.

B. Definitions:
   1. The term "Owner" used in these documents refers to the building Owner/Landlord.
   2. The term "Tenant" used in these documents refer to the future restaurant Tenant.
   3. The term "Contractor" used in these documents refers to the entity responsible for performing the Work under Construction Contract for the Owner.

1.2 Scope of Work:

A. The Work shall include construction of the site and building facilities as shown and specified in these Specifications and Drawings.

B. When required and necessary, the Owner will provide a subsurface exploration report as an attachment the bidding documents.

SECTION 01300 - ADMINISTRATIVE REQUIREMENTS

1.1 Coordination:

A. Immediately inform the Architect of discrepancies between the information indicated in the Contract Documents and existing project conditions, and of discrepancies between information indicated on the architectural, structural, mechanical, plumbing and electrical documents.

B. Prior to fabrication and installation of new components, field verify all existing and new dimensions and installation conditions that may affect the Work. Do not scale the drawings to establish locations of items that are not located using dimensions.
   1. All dimensions are to rough face of stud or centerline of structure, unless otherwise indicated.
   2. Verify that all Subcontractors have reviewed and coordinated locations of their equipment and furnishings exposed to view with the architectural drawings. Review questions with the Architect.

C. Coordinate new work indicated on the Contract Documents with new work that may be provided by the Owner and Tenant under separate contracts.

D. Coordinate the work of Vendors, Contractors and Subcontractors providing fixtures, furniture and equipment identified as "by Tenant" in these drawings and specifications.
   1. Notify the Tenant in timely fashion if any problems develop with the performance of these Vendors, Contractors or Subcontractors.

E. Coordinate the scheduling, sequencing, and the work of all trades and Subcontractors to assure efficient and orderly sequences of installation of interdependent construction elements.

F. Verify that the utility requirement characteristics of operating equipment are compatible with the building utility services. Coordinate work of the various specification sections having interdependent responsibilities for installing, connecting to, and placing in service such equipment.

G. Coordinate the installation and physical space requirements of plumbing, mechanical and electrical work that are indicated diagrammatically on the drawings. Follow routing shown for piping, ducts and conduit as closely as practical. Install runs parallel with and perpendicular to the line of the building. Utilize spaces as efficiently as possible to maximize accessibility for other work installation and for maintenance and for repair.
   1. Conceal piping, ducts and conduit within the construction, except as otherwise indicated.
   2. Coordinate locations of registers, fixtures and outlets with finish elements.

H. Coordinate completion and cleanup work of all trades and Subcontractors in preparation for Substantial Completion.

I. To minimize disruption of Tenant's activities after Tenant occupancy of the property, coordinate access to the property with the Tenant's Construction Manager for correction of defective work and work not in accordance with the Contract Documents.

1.2 Submittals:

A. Only when indicated in the specifications or drawings submit shop drawings, product data, and/or samples to the Architect, Design Manager, and Development Analyst for review. All submittals shall be made directly to the Architect by the general contractor. Only submittals for specified products will be accepted unless prior approval has been obtained for a substitution (refer to Section 01630).

   Shop drawings: Submit electronic copies of each sheet of drawings. Shop drawings are original drawings prepared by the subcontractor or vendor for the purpose of conveying information to the Architect and/or Engineer on how a building element or product will be constructed in sufficient detail for the Architect and/or Engineer to determine compliance with the design intent.

   In all cases one copy of the submittal shall be returned to the General Contractor. Electronic submittals for shop drawing or product data in either PDF or DWF format are acceptable for review. All submittals, regardless of format, must bear the General Contractor's stamp indicating the submittal has been reviewed and approved. Any submittal not meeting the requirements set forth will be rejected by the Architect.

   Submittals shall be made with respect to the construction schedule to allow for adequate review time: allow (5) business days for review of submittals for any structural steel, canopies and trusses and allow (3) business days for review of submittals in all other divisions. Review timeline will commence from the time the submittal with General Contractor's approval stamp is received by the Architect, Design Manager, and Development Analyst.

1.3 Requests For Information

A. In the event that the general contractor, or a subcontractor, at any tier, determines that some portion of the drawings, specifications, or other contract documents requires a clarification or interpretation by the architect, the general contractor shall submit a Request For Information in writing to the architect in an electronic copy.

   Requests for Information may only be submitted by the general contractor and may only be submitted to the architect. The general contractor shall clearly and concisely set forth the issue for which clarification or interpretation is sought and why a response is needed from the architect or the architect's consultants. In the Request for Information, the general contractor shall set forth an interpretation or understanding of the requirement along with an explanation of why such an understanding was reached.

B. The architect will review all Requests for Information to determine whether they are Requests for Information within the meaning of this term. If the architect determines that the document is not a request for information, it will be returned to the general contractor, un-reviewed as to content, for re-submittal in the proper form and in the proper manner.

   Responses to Requests for Information shall be issued upon receipt, but no later that five (5) working days of receipt of the Request from the general contractor; unless the architect determines that a longer amount of time is necessary to provide an adequate response. If a longer amount of time is determined necessary by the architect, the architect will, within five (5) working days of receipt of the Request, notify the general contractor of the anticipated response time. If the general contractor submits a Request for Information on an activity with five (5) working days or less of float on the current project schedule the general contractor shall not be entitled to any time extension due to the time it takes the architect to respond to the Request provided that the architect responds within the parameters set forth above.

C. Responses to Requests for Information from the architect will not change any requirements of the contract documents. In the event that the general contractor believes that a response to a Request For Information will cause a change to the requirements of the contract documents, the general contractor shall immediately give written notice to the architect and the tenant stating that the general contractor considers the response to be a Change Order. Failure to give such written notice immediately shall waive the general contractor's (or any subcontractor's) right to seek additional time or cost under the Administrative Requirements of these contract documents.

SECTION 01400 - QUALITY REQUIREMENTS

1.1 Regulatory Requirements:

A. Perform all work in accordance with applicable local, state, and federal building codes, plumbing codes, mechanical codes, electrical codes, ordinances and rules and regulations governing food service establishments.

B. Comply with local, state and federal requirements governing accessibility.

C. Obtain all required demolition and erosion control permits required by authorities having jurisdiction.

1.2 Quality Control:

A. Maintain quality control over manufacturers, suppliers, products, services, site conditions and workmanship, to produce work of specified quality.

B. Comply with manufacturer's instructions and applicable trade standards.

C. Handle, install, connect, clean, condition and adjust products in strict accordance with manufacturer's instructions and complying with specified requirements.
   1. Request clarification from the Architect before proceeding, where manufacturer's instructions conflict with the Contract Documents.

D. Comply with specified standards as a minimum quality for the Work, except when more stringent tolerances, codes or specified requirements indicate higher standards or more precise workmanship.

E. Perform work by persons qualified to produce workmanship of the specified quality. Secure products in place with positive anchorage devices designed, sized and installed to withstand stress, vibration, physical distortion or disfigurement.

F. All dimensions shall be considered "hold-to" dimensions unless indicated otherwise (e.g. minimum or maximum dimensions.)

1.3 Testing:

A. Employ and pay for the services of an independent testing laboratory to perform inspections, tests and other services when required.

B. Include inspection and tests as indicated in the specification sections, drawings, and as required by authorities having jurisdiction.
   1. Test concrete in accordance with Section 03300 and drawing requirements.
   2. Test structural steel in accordance with Section 05110 and drawing requirements.

SECTION 01500 - TEMPORARY FACILITIES AND CONTROLS

1.1 Provide temporary facilities and controls as shown and specified:

A. Codes and Standards: Provide temporary construction facilities and controls complying with all applicable local, State and Federal local laws, regulations and codes and utility company requirements.

B. Temporary Heating, Ventilating and Cooling:
   1. Provide, pay for and maintain all temporary heating, ventilating and cooling equipment and facilities required during the progress of the work to protect materials, finished work, and equipment against damage from low and high temperatures and humidity.
   2. Provide temporary heating, ventilating and cooling when the outside temperature and humidity is low/high enough to damage or affect in any way the performance or quality of material and product stored in the building, in any temporary storage area, or any material or product incorporated into the work.
   3. Provide temporary heating, ventilating and cooling when the outside temperature and humidity is low/high enough to significantly slow or hamper effectiveness of workers and to provide suitable working conditions.

C. Temporary Electrical Lighting and Power:
   1. Provide, pay for and maintain all temporary electrical service for lighting and power required during the progress of the work. Include all necessary wiring, fuses, disconnect switches, safety devices, junction boxes, panels, ground fault protections, and transformer if required. Include cost for providing temporary electric generators in the Contract Sum, if temporary electric service is not available for use during progress of the work.
   2. Temporary service and lighting and power items and installations shall conform to the requirements of the NFPA National Electric Code and OSHA Occupational Safety and Health Act of 1970.

D. Water: Provide, pay for and maintain all temporary water required during the progress of the work. Include all necessary storage tanks, piping, valves, fittings, hose and hose connections during construction and testing.

E. Temporary Toilets: Provide, pay for and maintain temporary toilet facilities for use by the Contractor, Contractor's employees and all Subcontractors and Subcontractors' employees. Comply with all local requirements for installation, use and maintenance of temporary toilet facilities.

F. Barriers and Enclosures:
   1. Provide temporary construction barriers in accordance with project requirements. Exercise all necessary precautions to protect adjacent properties, outside project contact limits, during progress of the work. Take special precautions to avoid damage to existing overhead and underground utilities and services owned or operated by the Owner or by public or private utility companies.
   2. Provide temporary weather-tight enclosures at exterior openings to provide acceptable working conditions and protection of materials and to allow for temporary heating, ventilating and cooling.

G. Field Office, Telephone and Email:
   1. Provide and maintain a temporary field office at the project site during progress of the work. A designated area within the existing building will be available for use as a temporary field office. Verify area size and location with the Tenant.
   2. Maintain copies of permits, approved shop drawings, specifications, addenda and record documents at field office.
   3. Provide temporary telephone service and internet service with email and photo capabilities to field office throughout progress of the work.
   4. Provide weekly photographic documentation of project progression to Tenant.

H. Safety and Security
   1. Provide and maintain all necessary safety provisions for protection and safety of the project work, workers and general public.
   2. Provide and maintain operable fire extinguishing devices in well-marked, accessible locations throughout the project. Provide types, quantities and locations in compliance with governing codes and ordinances.
   3. Provide all necessary security barriers and enclosures to protect the work and Tenant's operations from unauthorized entry of persons, vandalism and theft. Provide doors, when required, with self-closing hardware and locks.

I. Cleaning
   1. During Construction: Provide an approved on-site container for the use of all Contractors and Subcontractors for the collection of waste materials, debris and rubbish. Execute periodic cleaning to keep the work, the site and adjacent properties free from accumulations of waste materials, rubbish and windblown debris, resulting from construction operations. Remove crates and cartons in which materials, equipment, or fixtures are received to on-site containers daily.
      a. Maintain the property in a clean and orderly condition. Remove waste materials, debris and rubbish from the site on a daily basis and dispose of at legal disposal areas away from the site.

   2. Dust Control:
      a. Remove debris and rubbish from pipe chases, plenums and other similar closed or remote spaces prior to covering or enclosing the space.
      b. Sweep and vacuum clean interior surfaces before start of surface finishing and painting. Continue cleaning on an as-needed basis until finishing and painting is completed.
      c. Cleaning operations shall be acceptable to the Tenant's Construction Manager.

SECTION 01630 - SUBSTITUTIONS

1.1 General:

A. Products, including materials, equipment and systems described in the Contract Documents establish the standards of required function, dimension, appearance, quality and performance of the Work. Base all bids on the "Standards" indicated.

B. Requests by the Contractor for changes in products, manufacturers, fabricators, suppliers, installers, and methods of construction required by the Contract Documents are considered requests for "substitutions:" Substitutions will be considered only under the following conditions:
   1. The indicated "Standard" cannot be provided within the Contract Time
   2. The indicated "Standard" cannot receive necessary approval by the governing authority.
   3. A substantial advantage is offered the Owner, in terms of cost, time, energy conservation or other considerations of merit as determined by the Architect.

C. Submit each request for substitution to the Architect. Identify the product, manufacturer, fabricator, supplier, installer or the fabrication or installation method to be replaced in each request. Identify related Specification Section and Drawing numbers. Provide documentation as directed by the Architect.

D. Substitutions will not be considered when indicated on shop drawings or product data submittals without separate written request, when requested directly by subcontractor, manufacturer, fabricator, or supplier, or when acceptance will require substantial revision of the Contract Documents.

E. Substitute products, manufacturers, fabricators, suppliers, and installers shall not be used for the Project without Tenant and Architect's written acceptance.

SECTION 01700 - EXECUTION REQUIREMENTS

1.1 Preparation:

A. Protection of existing construction: Use all necessary care and appropriate means and methods to protect and prevent damage to existing construction and property not part of the Contract Work. Repair and refinish or replace construction an property damaged during construction work, at Contractor's expense.

1.2 Selective Demolition: Provide selective demolition as shown and specified.

A. Preparation:
   1. Coordinate work of this Section with work of various Contractors and Tenant's staff.
   2. Maintain protected access at all times.
   3. Erect and maintain weatherproof closures at exterior openings.
   4. Erect and maintain dust-proof interior partitions to prevent spread of dust or fumes.
   5. Erect and maintain barricades, enclosures, bracing, shoring, lights, warning signs and guards necessary for worker and public safety and protection of property.
   6. Disconnect, remove and cap designated utility services. Identify and mark locations of disconnected and capped utilities at the project site and on Project Record Documents.
   7. Notify and coordinate with the Tenant's Construction Manager and the building Owner for any demolition occurring outside the lease limit.
   8. Coordinate hours of operation and construction access with the Tenant's Construction Manager and the building Owner.

B. Selective Demolition
   1. Remove existing construction to accommodate new construction as indicated.
   2. Perform selective demolition in an orderly, systematic and careful manner with least possible disturbance to public and adjacent property. Use of explosives is prohibited.
   3. Immediately remove from the site and legally dispose of demolished materials, except as indicated otherwise. Do not burn or bury materials on the project site.

1.3 Cleaning

A. Final Cleaning: Perform final cleaning upon completion of project work.
   1. Remove waste and surplus materials, rubbish, tools, equipment and temporary construction facilities from the site.
   2. Clean exterior grounds; remove stains, spills and foreign materials from paved areas, power wash and sweep clean. Rake clean landscaped surfaces of the grounds.
   3. Remove temporary protection and labels not required to remain.
   4. Clean all finished surfaces. Remove grease, mastic, adhesives, dust, dirt, stains, fingerprints, labels and other foreign materials from exposed interior and exterior surfaces.
      a. Clean all plumbing, fire protection and electrical fixtures and equipment including ceiling area elevated ductwork and lighting fixtures.
      b. Clean permanent equipment filters and replace temporary disposable filters in mechanical units used during construction.
      c. Clean ducts, blowers and coils if mechanical units were operated without filters during construction.
   5. Clean interior and exterior glazing and mirrors, polish transparent and glossy surfaces and clean floors with appropriate materials and equipment.
   6. Remove waste, foreign material and debris from roofs, areaways and drainage systems.
   7. Before Tenant occupancy, conduct an inspection, with the Tenant, of exposed interior and exterior surfaces at all work areas, to verify that the entire work is clean.

1.4 Starting and Adjusting:

A. Prior to Substantial Completion, coordinate the start-up, test and balance, placement in operation and adjustment all systems, controls and equipment to verify proper operation. All systems shall be complete and operating prior to final inspection.

1.5 Contract Closeout:

A. Operation and Maintenance Data: Submit one operation and maintenance manual, bound in 8-1/2" x 11" text pages, three D side ring capacity expansion binders with durable plastic covers.
   1. Subdivide the binder contents internally with permanent dividers logically organized as described below. Provide tab titles clearly printed under reinforced laminated plastic tabs.
   2. Provide a table of contents with each product or system description identified.
   3. Provide a directory listing names, addresses, and telephone numbers of the project Architect/Engineer, Contractor, Subcontractors and major equipment suppliers.
   4. Prepare operations and maintenance instructions arranged by system and subdivided by specification section. Identify names, addresses, and telephone numbers of project Subcontractors and suppliers. For each category, identify the following:
      a. Significant design criteria.
      b. List of equipment.
      c. Parts list for each component.
      d. Operating instructions.
      e. Maintenance instructions for each equipment item and systems.
      f. Maintenance instructions for special finishes, including recommended cleaning methods and materials and special precautions for identifying detrimental agents.
   5. Submit operations and maintenance data to the Tenant with final application for payment in accordance with Exhibit C of the Construction Contract.

B. Record/As Built Documents:
   1. Prepare and maintain on site one set of the following record/as built documents:
      a. Contract Documents.
      b. Construction Documents.
      c. Change orders and other modifications to the Contract.
      d. Shop drawings, product data, and samples.
      e. Construction schedule.
   2. Store record/as built documents separate from documents used for construction.
   3. Record actual revisions to the Work, concurrently with construction progress.
   4. Legibly mark and record a description of actual products installed at each specification section, including the following:
      a. Manufacturer's name and product model and number.
      b. Approved product substitutions or alternates utilized.
      c. Changes made by addenda, change orders, and other modifications.
   5. Legibly mark each item to record actual construction, including the following:
      a. Measured depths of foundations in relation to finish first main floor datum.
      b. Measured horizontal and vertical locations of underground utilities and appurtenances, referenced to permanent surface improvements.
      c. Measured locations of internal utilities and appurtenances concealed in construction, referenced to visible and accessible features of the work.
      d. Field changes of dimension and detail.
      e. Details not on original Contract Document drawings.
   6. Submit record/as built documents to the Tenant with final application for payment in accordance with Exhibit C of the Construction Contract.

C. Warranties and Bonds:
   1. Compile warranties and bonds required by the Contract Documents.
   2. Submit duplicate copies of warranties and bonds to the Tenant with final application for payment in accordance with Exhibit C of the Construction Contract.

D. Maintenance Materials and Spare Parts:
   1. Provide extra maintenance materials and spare parts in quantities indicated in the specification sections.
   2. Place in location as directed by the Tenant's Construction Manager.

DIVISION 2 - SITE CONSTRUCTION

1.1 General: Provide site construction work, including services, utilities, earthwork, paving and landscaping in accordance with the site construction work drawings and details.

2.1 Materials:

A. Stencils for pavement markings: Pavement Stencil Comapny, P: (800) 250-5547, stencils@pavementstencil.com

DIVISION 3 - CONCRETE

SECTION 03300 - CAST-IN-PLACE CONCRETE

1.1 General: Provide cast-in-place concrete work in accordance with the General Structural Notes, structural drawing and details. Follow shell building documents for specifications, joints and geotech.

A. Standards: Materials and construction shall conform to the following:
   1. ACI 117 "Standard Tolerances for Concrete Construction and Materials."
   2. ACI 301 "Structural Concrete for Buildings."
   3. ACI 305R "Recommended Practice for Hot Weather Concreting."
   4. ACI 306R "Recommended Practice for Cold Weather Concreting."
   5. ACI 315 "Details and Detailing of Concrete Reinforcement."
   6. ACI 318 "Building Code Requirements for Reinforced Concrete."

2.1 Materials:

A. Under Slab Vapor Retarder: Stego Industries LLC, 877-464-7834, internet www.stegoindustries.com high density polyethylene Stego Wrap (10 mil) Vapor Barrier meeting or exceeding ASTM E1745 performance criteria for Class C vapor retarders.
   1. Seam Tape: High density polyethylene tape with pressure sensitive adhesive.
   2. Pipe boots: Shop or site fabricated from vapor retarder material and seam tape.

B. Concrete:
   1. Portland Cement: ASTM C150, Type I
   2. Aggregate: ASTM C33.
   3. Water: Clean and potable.
   4. Reinforcement: When required, comply with drawings reinforcement requirements.
   5. Compressive Strength: Minimum 3000 psi at 28 days.
   6. Admixtures: All admixtures shall be approved by the Tenant's Construction Manager prior to placement in the concrete mix.

C. Topping Concrete: When required to suit installation conditions, Ardex Diama-Top of Ardex Engineered Cements (888) 512-7339, internet www.ardex.com
   1. ULTRAFLOR ARDEX DIAMA-TOP, self-leveling concrete repair material.
   2. Any pinholes that need to be filled shall be filled with ARDEX DIAMA-FILL filling compound for polished concrete, concrete terrazzo and other cementitious wear surfaces applied at the appropriate time during the polishing process.
   3. The primer for areas to receive ARDEX DIAMA-TOP will be ARDEX EP 2000 Substrate Preparation Epoxy.
   4. Installation shall be performed by factory-trained professional applicators in strict accordance with manufacturer's installation instructions.

3.1 Installation

A. Vapor Retarder: Place, protect and repair vapor retarder sheets in accordance with ASTM E1643 and manufacturer's installation instructions.
   1. Provide a single layer of vapor retarder material over level compacted slab base.
   2. Lap joints and seams 6 inches and seal with seam tape.
   3. Seal all penetrations and repair damaged areas before concrete placement.

B. Reinforcement Place and inspect all reinforcing steel before concrete is placed.

C. Concrete Placement:
   1. Place cast-in-place concrete in accordance with ACI 301 and ACI 305R and 306R recommended practices for hot weather and cold weather concreting. Do not place concrete when temperature is below 40 degrees F.
   2. Wet cure concrete in accordance with ACI 301, using moist curing or moisture-retaining covers

D. Finish: Except where additional floor finish is scheduled, provide a smooth steel trowel finish.
   1. Exposed concrete used as a finish floor surface shall have a smooth finished surface, uniform in texture and appearance and free of trowel marks and other defects affecting ease of maintenance.
   2. Grind smooth surface defects as directed by the Tenant's Construction Manager.

E. Testing: When required, comply with drawings and specification sections testing requirements.

F. Topping Concrete: Prepare concrete floor slab substrate surfaces, prime substrate surfaces, mix, install and finish topping concrete in accordance with manufacturer's application instructions.

DIVISION 4 - MASONRY

SECTION 04210 - CLAY BRICK MASONRY

1.1 General: Provide unit masonry assemblies as shown and specified.

A. Standards: Materials and construction shall conform to the following:
   1. ACI 530.1-02/ASCE 6-02/TMS 602-02 "Specifications for Masonry Structures."
   2. BIA "Technical Notes on Brick Construction."

2.1 Materials:

A. Thin Brick:
   1. Manufacturer:
      a. Endicott, (402) 729-3315, www.endicott.com
   2. Type: "Thin Brick C1088" complying with ASTM C1088, Grade SW, Type FBS. No efflorescence when tested in accordance with ASTM C1088.
   3. Size: Modular, 1/2" thick, laying three courses to 8" vertically.
   4. Pattern: Stacked Bond, or as noted on Exterior Elevations
   5. Color: "Sienna Ironspot Smooth" as noted on Exterior Elevations
      Alternate colors to be confirmed by Chipotle.
   6. Provide special shapes where required.

B. Face Brick (when required):
   1. Manufactureur:
      a. Belden Brick Company, (330) 451-2031, www.beldenbrick.com
      b. Endicott, (402) 729-3315, www.endicott.com
   2. Type: "Face Brick C216" complying with ASTM C216, Grade SW, Type FBS. No efflorescence when tested in accordance with ASTM C1088.
   3. Size: Modular, laying three courses to 8" vertically.
   4. Pattern: Running Bond or as noted on Exterior Elevations
   5. Color: "Alaska White Velour" (Belden) as noted on Exterior Elevations
      Alternate colors to be confirmed by Chipotle.
   6. Provide special shapes where required.

C. Mortar Materials:
   1. Follow BIA Technical Note #8

D. Unit Masonry Mortar Mixes: ASTM C270 proportions by volume.
   1. Types:
      a. Thin brick: Type S mortar.
      b. Face brick: Type N mortar.
   2. Dyes:
      a. SM #800 "Black" by Spec Mix (Sienna Ironspot)
      b. SGS #60A "White" by Solomon Grind Services (Alaska White)

E. Concealed Masonry Through-Wall Flashing: W. R. Grace "Perm-A-Barrier" self-adhering modified bituminous sheet, 40 mils thick.
   1. Termination Mastic: W.R. Grace "Bituthene Mastic."
   2. Primer: W.R. Grace "Bituthene P-300 Primer."
   3. Termination bars: Extruded aluminum or stainless steel, 1" wide and .098" thick pre-punched at 6" on center, secured with stainless steel drive pins.

© COPYRIGHT WILKUS ARCHITECTS

CONSULTANT

WILKUS ARCHITECTS

CLIENT

Alliance DEVELOPMENT

FRED JACQUES
ALLIANCE DEVELOPMENT
230 OHIO ST, SUITE 200
OSHKOSH, WI 54902
(612) 313-0126

PROJECT INFORMATION

SOUTH LA CROSSE SHELL
MORMON COULEE RD & LOSEY BLVD S
LA CROSSE, WI 54601

SEAL

NOT FOR CONSTRUCTION

PROJECT NO.	2025-0394
DRAWN BY	BEH
CHECKED BY	SAS

ISSUE	DATE
PERMIT SET	01/09/2026

REVISION	DATE

TITLE:
ARCHITECTURAL SPECIFICATIONS

SHEET NUMBER:
G010

F. Metal Lath
1. Min 2.5lb/yd expanded mesh meeting ASTM C847, as required by building code.
2. Metal Lath to Wood Framing
a. Fasteners: Min 0.120" shank diameter galvanized nails or staples, sufficient to penetrate 1" minimum into structural members, complying with ASTM C1063

G. Joint Reinforcement, Wall Ties And Anchors: Finish, ASTM A-153 hot-dip galvanized
1. Manufacturer: Hohman & Barnard, INC.
2. Masonry Veneer To Wood Framing: H&B - DW-10HS Veneer Anchor, With Adjustable 3/16" Cold-Drawn Steel Wire Tie Sections and 14 GA. Screw-On Attachment Plate.
a. Fasteners: Self-Drilling, Self-Tapping Screws, 1-1/4" X #10, Corrosion-Resistant Coated. Provide Two (2) Screw Fasteners for each Attachment Plate.
3. Seismic Masonry Veneer to Wood Framing: (When Required) H&B Seismic Plate Pintle HB-213S with HB-213 (T-Lok Tie)
a. Fasteners: Seld-Drilling, Self-Tapping Screws, 1-1/4" X #10, Corrosion-Resistant Coated. Provide Two (2) Screw Fasteners For Each Attachment Plate.
4. Metal framed walls: Tie exterior masonry veneer wythe to back-up wall with individual metal ties screwed to metal stud framing.

H. Accessories
1. Wall weeps: Dur-O-Wal D/A 1006 "Cell Vent", clear flexible polypropylene co-polymer.
2. Compressible joint material: Dur-O-Wal "Rapid Soft-Joint" D/A 2010.
3. Bond breaker strips: ASTM D226 No. 15 asphalt saturated roofing felt.
4. Cleaning agents: ProSoCo, Inc., "Sure Klean New Masonry Cleaners."
5. Expansion/Control joint sealants: Polyurethane-based, elastomeric joint sealant complying with ASTM C920 and Section 07900 requirements. Color matched to adjacent surfaces.

3.1 Installation

Thin Brick

A. Preparation
1. Clean surfaces thoroughly prior to installation. All surfaces must be free of water, snow, dirt, mud, oil and other foreign material prior to application.
2. Prepare substrate as recommended by manufacturer.
3. Trim or flash in place per manufacturer's details and/or BIA Technical Note 7A.

B. Installation
1. Layout walls in advance for accurate spacing of surface bond patterns with uniform joint thickness and for accurate location of openings, movement joints, returns and offsets.
a. Avoid using less-than-half-size units, particularly at corners and jambs
b. Ensure unfinished or cut faces are not exposed to view upon completion.
2. Select and arrange masonry units to produce a uniform blend of color and texture.
3. Comply with tolerances in ACI 530.1/ASCE 6/TMS 602
4. Space movement joints no more than 18 ft o.c. in either direction.
5. See Section D under Face Brick for Cleaning notes.

Face Brick

A. Preparation
1. Wet absorbent face brick masonry units requiring wetting, in accordance with BIA recommendations.
2. Lay concrete masonry units dry.
3. Establish, lines, levels and coursing. Ensure ties, anchors and flashing are correctly installed
4. Mix mortar cementitious materials and aggregate in a mechanical mixer. Add water in amount to provide satisfactory workable consistency of mortar. Retemper mortar as required within two hours of mixing to replace water lost be evaporation. Discard mortar after two and one-half hours of initial mixing. Do not use mortar after it has started to set.

B. Installation:
1. Build walls and other masonry construction to the full thickness shown. Build single wythe walls to the actual thickness of the masonry units, using units of nominal thickness shown.
2. Cut masonry units using motor-driven masonry saws to provide clean, sharp edges. Cut units to fit adjoining work neatly. Provide 100% solid units where cores would be exposed.
3. Cold weather construction, hot weather construction, and masonry construction tolerances: Comply with unit masonry standard ACI 530.1/ASCE 6/TMS 602 requirements.

C. Laying Masonry

1. Layout walls in advance to ensure accurate spacing of surface bond patterns, with uniform joint widths, and to properly locate openings, movement type joints, returns and offsets. Do not use less than half-size units at corners, jambs and other locations.
2. Lay up walls plumb and true to comply with ACI 530.1 tolerances. Provide square corners and angles, except as otherwise indicated, with courses level, accurately spaced and coordinated with other work.
3. Pattern bond: See Elevations. Do not use units with less than 4" of horizontal face dimensions at corners or jambs.
4. Lay face brick with completely filled bed and head joints. Do not slush head joints. Maintain uniform 3/8" joint widths.
5. Compress and cut joints flush for masonry walls below grade or covered by other materials.
6. Tool joints in all exposed masonry work to a concave joint.
7. Provide interlocking masonry bond in each course at corners and intersecting walls.
8. As the work progresses, build in masonry accessories and related items. Fill in solidly with masonry around built-in items.
a. Bed hollow metal frame anchors in mortar and fill space between hollow metal frames and masonry solid with fine mortar grout.
b. Provide solid masonry bearing for all lintels, beams, joists, plates and load-bearing members.
c. Take particular care to embed all conduits and pipes within concrete masonry without fracturing exposed shells and to fit units around switch, receptacle and other boxes set in walls. Where electric conduit, outlets, switch boxes and similar items occur, grind and cut units before building in services.
d. Install anchors, plates and related work built into masonry work.
e. Install reinforcing steel and concrete fill where indicated. Comply with drawing details.
f. For veneer, maintain wall cavity free of mortar droppings during installation.
9. Anchoring masonry work: Provide anchoring devices of the type indicated or required.
a. Space ties 16" o.c. vertically and horizontally.
10. Provide vertical expansion, control and isolation joints in masonry where indicated.
a. When not indicated, at maximum 30'-0" on center.
b. Locate control joints at points of natural weakness in masonry and acceptable to Architect.
c. Joint sealant color shall match masonry materials sealed.
11. Lintels: Install loose steel lintels furnished under structural steel work where shown. Set lintels in full bed of mortar.
12. Flashing and weeps:
a. Install concealed through wall masonry flashing at all wall sills, masonry openings in exterior walls with masonry above head, over all horizontal steel members built into masonry and elsewhere as indicated. Provide "drainage wall system" masonry construction.
b. Provide end dams and positive slope to drain. Extend flashing vertically at least 8" and built into or anchor to back-up with a termination bar for a complete watertight installation.
c. Flexible Membrane Flashing:
1.) Install membrane flashing in accordance with manufacturer's installation instructions.
2.) Fully adhere flashing to substrate.
3.) Lap flashing joints a minimum of 6", seal and roll with a hand roller.
4.) Trim bottom edge 1/4" back from exposed face of masonry.
5.) Seal edges, seams, cuts and penetrations with manufacturer's recommended mastic.
13. Install weeps in head joints of final course of exterior masonry wythe above flashing. Space weeps maximum of 24" on center horizontally and located to avoid door openings. Install weeps at head joints with outside face of weep material held 1/8" from the finish face of masonry unit.
14. Install compressible joint material at lintels and horizontal steel members. Build in joint fillers and seal with elastomeric joint sealant.

D. Repair, Pointing and Cleaning
1. In process cleaning: Wipe off excess mortar as the work progresses. Dry brush with bristle brushes exposed masonry at the end of each day's work. Remove mortar spatters and joint ridges.
2. Clean all exposed masonry. Cleaning agents subject to Architect's approval. Before applying any cleaning agent to the entire wall, clean a sample wall area of approximately 20 square feet in a location acceptable to the Architect. Do not proceed with final cleaning until the sample area has been allowed to dry a minimum of 3 days and the test area cleaning approved. Protect all windows, doors, louvers, metal lintels and other corrodible parts. Damaged materials and work replaced at Contractor's expense.
3. Dry clean exposed surfaces to remove large particles of mortar using hardwood wood paddles and scrapers. Metal tools not acceptable.
4. Presoak exposed masonry surfaces by saturating with water and flush off loose mortar and dirt.
5. Apply cleaning solutions and clean masonry in accordance with the cleaning material manufacturer's cleaning instructions.
6. Muriatic acid cleaning of masonry not permitted.

© COPYRIGHT WILKUS ARCHITECTS

SECTION 04220 - CONCRETE UNIT MASONRY

1.1 General: Provide unit masonry assemblies as shown and specified.

A. Standards: Materials and construction shall conform to the following:
1. ACI 530.1-02/ASCE 6-02/TMS 602-02 "Specifications for Masonry Structures."
2. NCMA "TEK Bulletins."

2.1 Materials:

A. Concrete Masonry Units (CMU): Size and thickness as shown on drawings.
1. ASTM C 90, load-bearing, normal weight, natural color CMU, properly cured at time of delivery, linear shrinkage not to exceed 0.065%.
2. Provide special shapes where required.
3. Provide exterior wall CMU containing an integral polymeric water-repellent admixture.
a. Manufacturer: W. R. Grace "Dry-BlockR System Block Admix ".

B. Mortar Materials:
1. Portland cement: ASTM C150, Type I or III, natural color.
2. Masonry cement: ASTM C91, Type indicated, natural color.
3. Aggregate: ASTM C144, clean masonry sand.
4. Water: Clean, fresh and potable.
5. Provide all exterior wall masonry mortar containing an integral polymeric water-repellent admixture.
a. Manufacturer W. R. Grace, "Dry-BlockR Integral Water-Repellent Mortar Admixture".

C. Unit Masonry Mortar Mixes: ASTM C270 proportions by volume.
1. Type N mortar.

D. Reinforced Unit Masonry Grout Mixes
1. Concrete fill: ASTM C94 3,000 psi concrete.

E. Joint Reinforcement:
1. Manufacturer: Hohman & Barnard, INC.
2. Horizontal joint reinforcement: Welded ladder type with matching corners and Tee units.
a. Single Wythe masonry: Standard single 9 gage side and cross rods. H&B - #220 Ladder-Mesh.
3. Anchoring devices: Provide strap anchors, inserts, bolts and rods of type and size indicated.
a. CMU to CMU: Strap anchors 1/4" x 1-1/4" x 24" steel with bent ends.
b. CMU to structural steel: H&B - VBT - Vee Byne-Tie With Plain Steel (Tie) Used In Conjunction With H&B #359 Weld-on Ties (Anchor Rods).

F. Concealed Masonry Through-Wall Flashing: W. R. Grace "Perm-A-Barrier" self-adhering modified bituminous sheet, 40 mils thick.
1. Termination Mastic: W.R. Grace "Bituthene Mastic."
2. Primer: W.R. Grace "Bituthene P-300 Primer."
3. Termination bars: Extruded aluminum or stainless steel, 1" wide and .098" thick pre-punched at 6" on center, secured with stainless steel drive pins.

G. Accessories
1. Reinforcing bars: ASTM A615, Grade 60, deformed billet steel bars of sizes indicated.
2. Compressible joint material: Dur-O-Wal "Rapid Soft-Joint" D/A 2010.
3. Bond breaker strips: ASTM D226 No. 15 asphalt saturated roofing felt.
4. Cleaning agents:
a. CMU: ProSoCo, Inc., "Sure Klean New Masonry Cleaners."
b. ACMU: ProSoCo, Inc., "Sure Klean Burnished Custom Masonry Cleaner."
5. Expansion/Control joint sealants: Polyurethane-based, elastomeric joint sealant complying with ASTM C920 and Section 07900 requirements. Color matched to adjacent surfaces.

3.1 Installation

A. Preparation
1. Clean and prepare reinforcement, anchor bolts and foundation.
2. Establish, lines, levels and coursing.
3. Construct grout spaces to meet TMS 602 Article 3.2

B. Installation - General:
1. Lay concealed masonry in running bond unless otherwise indicated.
2. Cut masonry units using motor-driven masonry saws to provide clean, sharp edges. Cut units to fit adjoining work neatly. Provide 100% solid units where cores would be exposed.
3. Cold weather construction, hot weather construction, and masonry construction tolerances: Comply with unit masonry standard ACI 530.1/ASCE 6/TMS 602 requirements.

C. Laying Masonry
1. Layout walls in advance to ensure accurate spacing of surface bond patterns, with uniform joint widths, and to properly locate openings, movement type joints, returns and offsets. Do not use less than half-size units at corners, jambs and other locations.
2. Lay up walls plumb and true to comply with ACI 530.1 tolerances. Provide square corners and angles, except as otherwise indicated, with courses level, accurately spaced and coordinated with other work.
3. Pattern bond: Running bond, unless noted otherwise. Do not use units with less than 4" of horizontal face dimensions at corners or jambs.
4. Lay hollow CMU/ACMU with full mortar coverage on horizontal and vertical face shells. Bed CMU webs in mortar in starting courses. Maintain uniform 3/8" joint widths.
5. Lay solid CMU/ACMU with completely filled bed and head joints. Do not slush head joints. Maintain uniform 3/8" joint widths.
6. Compress and cut joints flush for masonry walls below grade or covered by other materials.
7. Tool joints in all exposed masonry work to a concave joint.
8. Provide interlocking masonry bond in each course at corners and intersecting walls.
9. As the work progresses, build in masonry accessories and related items. Fill in solidly with masonry around built-in items.
a. Bed hollow metal frame anchors in mortar and fill space between hollow metal frames and masonry solid with fine mortar grout.
b. Provide solid masonry bearing for all lintels, beams, joists, plates and load-bearing members.
c. Take particular care to embed all conduits and pipes within concrete masonry without fracturing exposed shells and to fit units around switch, receptacle and other boxes set in walls. Where electric conduit, outlets, switch boxes and similar items occur, grind and cut units before building in services.
d. Install anchors, plates and related work built into masonry work.
e. Install reinforcing steel and concrete fill where indicated. Comply with drawing details.
10. Horizontal joint reinforcing: Provide continuous joint reinforcing at all concrete masonry walls as follows:
a. In every second block course, 16" on center vertically, full height of wall and every block course where shown on the drawings.
b. Lap reinforcement a full width at the corners and at intersections or use special fabricated sections.
c. Fully embed side rods in mortar.
11. Anchoring masonry work: Provide anchoring devices of the type indicated or required.
12. Provide vertical expansion, control and isolation joints in masonry where indicated.
a. When not indicated, at maximum 30'-0" on center.
b. Locate control joints at points of natural weakness in masonry and acceptable to Architect.
c. Joint sealant color shall match masonry materials sealed.
13. Lintels: Install loose steel lintels furnished under structural steel work where shown. Set lintels in full bed of mortar.
14. Flashing and weeps:
a. Install concealed through wall masonry flashing at all wall sills, masonry openings in exterior walls with masonry above head, over all horizontal steel members built into masonry and elsewhere as indicated.
b. Provide end dams and positive slope to drain. Extend flashing vertically at least 8" and built into or anchor to back-up with a termination bar for a complete watertight installation.
c. Flexible Membrane Flashing:
1.) Install membrane flashing in accordance with manufacturer's installation instructions.
2.) Fully adhere flashing to substrate.
3.) Lap flashing joints a minimum of 6", seal and roll with a hand roller.
4.) Trim bottom edge 1/4" back from exposed face of masonry.
5.) Seal edges, seams, cuts and penetrations with manufacturer's recommended mastic.
15. Install weeps in head joints of final course of exterior masonry wythe above flashing. Space weeps maximum of 24" on center horizontally and located to avoid door openings. Install weeps at head joints with outside face of weep material held 1/8" from the finish face of masonry unit.
16. Install compressible joint material at lintels and horizontal steel members. Build in joint fillers and seal with elastomeric joint sealant.

D. Parging:
1. Dampen masonry walls prior to parging.
2. Scarify each parging coat to ensure full bond to subsequent coat.
3. Parge masonry walls in two uniform coats of mortar to a total thickness of 3/4 inch (19mm).
4. Steel trowel surface smooth abs flat with a maximum surface variation of 1/8 inch per foot (1mm/meter).

E. Architectural Concrete Masonry Units: Install ACMU in accordance with the manufacturer's installation instructions and the following:
1. Draw ACMU from more than one pallet at a time during installation.

F. Reinforced Concrete Masonry
1. Reinforce and fill CMU/ACMU wall and column masonry where indicated. Fill all cores solid with concrete fill. Comply with NCMA TEK Bulletins 3-2, 3-3A and 14-2 recommendations.
a. Comply with drawing details for reinforcing steel size and spacing.
2. Install bond beams where indicated. Reinforce and fill units solid with concrete fill. Comply with drawing details for reinforcing steel size and spacing.

G. Repair, Pointing and Cleaning
1. In process cleaning: Wipe off excess mortar as the work progresses. Dry brush with bristle brushes exposed masonry at the end of each day's work. Remove mortar spatters and joint ridges.
2. Clean all exposed masonry. Cleaning agents subject to Architect's approval. Before applying any cleaning agent to the entire wall, clean a sample wall area of approximately 20 square feet in a location acceptable to the Architect. Do not proceed with final cleaning until the sample area has been allowed to dry a minimum of 3 days and the test area cleaning approved. Protect all windows, doors, louvers, metal lintels and other corrodible parts. Damaged materials and work replaced at Contractor's expense.
3. Dry clean exposed surfaces to remove large particles of mortar using hardwood wood paddles and scrapers. Metal tools not acceptable.
4. Presoak exposed masonry surfaces by saturating with water and flush off loose mortar and dirt.
5. Apply cleaning solutions and clean masonry in accordance with the cleaning material manufacturer's cleaning instructions.
6. Muriatic acid cleaning of masonry not permitted.

H. Architectural Concrete Masonry:
1. Keep ACMU walls clean during installation. Remove excess mortar on daily basis using brushes, rags or burlap squares.
2. Clean completed walls with detergent masonry cleaner recommended by the ACMU manufacturer. Acid cleaning agents, abrasive cleaners, tools or powders and metal cleaning tools and brushes are not permitted.
3. After final clean down and when walls are dry, apply ACMU acrylic finish coating in accordance with ACMU manufacturer's application instructions.

SECTION 04245 - BRICK PANEL SYSTEMS

1.1 General: Provide formed metal fabrications as shown and specified.

A. Related Sections
Section 04210 - Clay Unit Masonry
Section 07600 - Flashing and Sheet Metal
Section 07900 - Joint Sealers

2.1 Materials

A. Thin Veneer Support Panel, 18ga Structural Steel
B. Panel for Modular Bricks or as noted on Exterior Elevations
C. Fasteners in accordnace with manufacturer's recomendation.

3.1 Examination:

A. Examine substrates, areas, and conditions with Installer present, for compliance with requirements for installation tolerances and other conditions affecting performance of work.
1. Verify framing and substrates are plumb and level prior to installation of formed metal panels.
2. Visually examine finished surfaces to assure that blemished or dented surfaces are not present prior to installation.
3. Proceed with installation only after unsatisfactory conditions have been corrected.

3.2 Installation:

A. Water infiltration barrier must be installed prior to placement of panel. Trim or flash in place per BIA Tech Note 7A.

B. Panels shall be mechanically secured to a structural wall with a manufacturer's approved fastener in accordnace with manufacturer's recommendation. Panels shall be attached with minimum of one fastener per SF. All fastening devices shall be corrosion resistant type. Panel joints shall be staggered over sheathing joints.

C. Control joints are requried to coincide with building control joints, where substrate changes and within 2-4 ft of corners. Follow BIA Techinical Note 18A Revised.

D. Thin veneers shall be initally adhered to panel using specially formulated ashesive in quarter sized dabs or vertical strips 3/8" wide. Thin veneers shall be applied within 5 to 10 minutes after adhesive has been applied.

E. When all applied veneers are secured in place, fill joints and seams with grout. Mortar vertical joints immediately following each fourth horizontal joint.

F. All areas where thin veneer meets non-veneer surfaces must be caulked with sealant.

DIVISION 5 - METALS

SECTION 05120 - STRUCTURAL STEEL

1.1 General: Provide structural steel in accordance with the General Structural Notes and structural drawings and details.

A. Standards: Materials and construction shall conform to following:
1. AISC "Specification for the Design, Fabrication, and Erection of Structural Steel for Buildings."
2. AISC "Code of Standard Practice."
3. AWS "Structural Welding Code, D1.1-Steel."

2.1 Materials:

A. Materials compliance: When requested, submit acceptable data documenting materials compliance for each type of material required.

B. Structural Shapes: ASTM A36/A36M, 36 ksi steel.

C. Tubular Steel: ASTM A500, 46 ksi yield strength steel, cold-formed welded and seamless.

D. Structural pipe: ASTM A53, type and grade selected by the fabricator as required for design loading, standard finish, standard weight (Schedule 40) except as otherwise indicated.

E. Grout: ASTM C1107, pre-mixed, shrinkage resistant, non-metallic, non-corrosive, non-staining grout.

F. Shop paint primer: Refer to Section 09900 - Paints and Coatings.

G. Fabrication: Fabricate structural steel in accordance with AISC "Specification - Structural Steel for Buildings" and "Code of Standard Practice." Provide welded or bolted connections in accordance with the Structural Drawings connection requirements.
1. Welding: Conform to AWS welding standards. Provide only continuous welds, spot welding is not acceptable. Grind all exposed welds smooth.
2. Splicing: Material, if spliced, shall have maximum one splice per structural member. Perform splicing by full penetration butt-welding using AWS qualified welders and welding methods.
3. Shop painting: Shop paint structural metal members, except members or portions of members to be embedded in concrete or masonry, surfaces and edges to be field welded and galvanized surfaces. Refer to Section 09900 - Paints and Coatings.

3.1 Installation:

A. Erection: Erect structural steel in accordance with AISC "Specification - Structural Steel for Buildings" and "Code of Standard Practice".
1. Plumb, level and align base plates for structural members with steel shims.
2. Grout structural steel base plates solid that bear on concrete or masonry surfaces.

B. Testing: When required, comply with drawings testing requirements.

SECTION 05400 - COLD-FORMED METAL FRAMING

1.1 General: Provide cold-formed metal framing in accordance with the General Structural Notes and structural drawings and details.

A. Standards: Materials and construction shall conform to following:
1. AISI SG02.2-01 "Design of Cold-Formed Steel Structural Members."
2. AWS "Structural Welding Codes, D1.3-Sheet Steel."

2.1 Materials:

A. Materials compliance: When requested, submit acceptable data documenting materials compliance for each type of material required.

B. Load-Bearing Cold-Formed Metal Framing: ASTM A1003, Gage, Grade and Type indicated.
1. Components: Provide sizes and shapes indicated.
2. Finish: Galvanized complying with ASTM A653, minimum G60 coating.

C. Fabrication:
1. Cold-formed metal framing may be prefabricated into panels before erection. Fabricate panels plumb, square, true to line and braced against racking with joints welded.
a. Provide one-piece full-length cold-formed metal framing members. Splicing not permitted.
2. Attach and join other components by welding or screw fasteners, as indicated. Wire tying of framing components is not permitted.
3. Cut framing to fit squarely for attachment to perpendicular members or as required for angular fit against abutting members. Hold members securely in position until properly fastened.
4. Saw cut field cut framing. Torch cutting not acceptable.

3.1. Installation:

A. Erection: Erect cold-formed metal framing members of gage and at spacing indicated on the Structural Drawings. Align and secure studs to top and bottom runner tracks by welding or screw fasteners at both inside and outside flanges.

B. Tolerance Acceptance: Install cold-formed metal framing member as indicated on the plans. Install to 1/16" tolerance.

SECTION 05500 - METAL FABRICATIONS

1.1 General: Provide metal fabrications as shown and specified.

A. Submit shop drawings for the following:
1. Patio Rail systems.
a. Show thickness, size, construction and manner of assembling various members, joint locations and railing layout.
b. Show true profiles, connections and relationship to adjoining work and methods of anchoring.

2.1 Materials

A. Materials compliance: When requested, submit acceptable data documenting materials compliance.

B. Steel Shapes: ASTM A36/A36M, 36 ksi steel.

C. Patio Railing System
1. Submit shop drawings including the following:
a. Show thickness, size, construction and welding, as well as assembly drawings.
b. Show true profiles, connections of all typical joint configurations
c. Show installation (fastening) and proposed grout (non-gypsum base)
d. Show gate detail and gate hardware manufacturer and model number
e. Patio railing plan, with dimensions and panel assembly locations.
2. Fabrication
a. Patio rails and gate shall be fabricated from tube steel, grade A36.
b. Corner angles shall be welded.
c. Gate hinges shall be a self-closing, adjustable tension type. Hinge installation shall be drilled and tapped. Permanently welded are unacceptable.
d. Gate stop shall have a rubber cushion stop and be affixed to the active gate.
e. All corners and joints shall be seal welded and outside joints ground smooth.
f. All welding spatter shall be removed before sand blasting.
3. Finish
a. Patio railing shall be finished with a flat black powder coat.

F. Exposed Fasteners:
1. Patio Railing:
a. All fasteners shall be stainless steel.

G. Shop paint primer: Refer to Section 09900 - Paints and Coatings

3.1 Installation: Comply with the Architectural Drawing details and the following:

A. Patio Railing System:
1. Railing posts shall be welded to base plate and the railing attached on wite with wedge anchors.
2. Railing posts shall be set plumb and level, with a tolerance of 1/8" in 4 feet.

B. Hand-inspect all joints and edges of installed metal materials. Unless otherwise indicated, fit exposed connections accurately together to form tight hairline joints. Grind and ease exposed joints, and edges smooth and free of burrs.

SECTION 05580 - FORMED METAL FABRICATIONS

1.1 General: Provide formed metal fabrications as shown and specified.

A. Submit shop drawings for the following:
1. Brake Metal Portal & Trim
a. Show layout, dimensions, size, finish and configuration and connection details.

B. Related Sections
Section 05500 - Metal Fabrications
Section 07600 - Flashing and Sheet Metal
Section 07900 - Joint Sealers
Section 084113 - Aluminum Framed Entrances and Storefronts

2.1 Materials

A. Materials compliance: When requested, submit acceptable data documenting materials compliance.
B. Material Thickness: Min 18ga Aluminum
1. Material to be thick enough to avoid oil canning
C. Finish: Anodized - Black
1. Finish should be suitable to avoid crazing issues.
D. Fasteners: Concealed only

2.2 Formed Metal Fabrications:

A. Shop assembly: Preassemble formed metal in shop to greatest extent possible to minimize field splices and assembly. Disassemble only as necessary for transportation and handling. Clearly mark items for assembly and installation.

B. Coordinaton: Match dimensions and attachement of formed metal items to adjacent construction. Produce integrated assembles. Closely fit joints; align edges and flat surfaces unless indicated otherwise.

C. Form profiles as indicated, refer to Interior Elevations. Form metal around outside corners as shown. Provide flat, flush surfaces without cracking or grain seperation at bends.

CONSULTANT

WILKUS ARCHITECTS

CLIENT

Alliance DEVELOPMENT

FRED JACQUES
ALLIANCE DEVELOPMENT
230 OHIO ST, SUITE 200
OSHKOSH, WI 54902
(612) 313-0126

PROJECT INFORMATION

SOUTH LA CROSSE SHELL
MORMON COULEE RD & LOSEY BLVD S
LA CROSSE, WI 54601

SEAL

NOT FOR CONSTRUCTION

PROJECT NO.	2025-0394
DRAWN BY	BEH
CHECKED BY	SAS

ISSUE	DATE
PERMIT SET	01/09/2026

REVISION	DATE

TITLE:
ARCHITECTURAL SPECIFICATIONS

SHEET NUMBER:
G011

2.1 Materials

A. Materials compliance: When requested, submit acceptable data documenting materials compliance.
B. Material Thickness: Min 18ga Aluminum
   1. Material to be thick enough to avoid oil canning
C. Finish: Anodized - Black
   1. Finish should be suitable to avoid crazing issues.
D. Fasteners: Concealed only

2.2 Formed Metal Fabrications:

A. Shop assembly: Preassemble formed metal in shop to greatest extent possible to minimize field splices and assembly. Disassemble only as necessary for transportation and handling. Clearly mark items for assembly and installation.

B. Coordinaton: Match dimensions and attachement of formed metal items to adjacent construction. Produce integrated assembles. Closely fit joints; align edges and flat surfaces unless indicated otherwise.

C. Form profiles as indicated, refer to Interior Elevations. Form metal around outside corners as shown. Provide flat, flush surfaces without cracking or grain seperation at bends.

2.3 Finishes

A. Finishes, General: Comply with NAAMM AMP 500-06
   1. Complete mechanical finishes before fabrication. After fabrication, finish joints, bends, abrasions and surface blemishes to match sheet.
   2. Protect mechanical finishes on exposed surfaces from damage.
   3. Apply organic and anodic finishes to formed metal after fabrication unless indicated otherwise.
   4. Appearance: Limit variations in appearance of adjacent to one-half the range represented in approved samples. noticeable variations in the same piece are not acceptable. Install components in the range of approved samples to minimize contrast.

3.1 Examination:

A. Examine substrates, areas, and conditions with Installer present, for compliance with requirements for installation tolerances and other conditions affecting performance of work.
   1. Verify framing and substrates are plumb and level prior to installation of formed metal panels.
   2. Visually examine finished surfaces to assure that blemished or dented surfaces are not present prior to installation.
   3. Proceed with installation only after unsatisfactory conditions have been corrected.

3.2 Installation:

A. Comply with Shop Drawings and manufacturer's written instructions for installation.

B. Install formed metal panels level, plumb, square, true and aligned with adjacent construction. Use concealed shims where required for alignment.

C. Separate aluminum and other corrodible surfaces from sources of corrosion or electrolytic action at points of contact with other materials.

D. Attach formed metal fabrications to framing and substrates as indicated on drawings.

3.3 Adjusting, Cleaning, and Protection:

A. Clean aluminum surfaces immediately after installation. Avoid damaging protective coatings and finishes. Remove excess adhesives, tapes and other substances.

B. Protect brake metal from damage during the remainder of construction.

DIVISION 6 - WOOD AND PLASTICS

SECTION 06100 - ROUGH CARPENTRY

1.1 General: Provide rough carpentry work as shown and specified.

A. Standards: Materials and construction shall conform to following:
   1. NIST PS-1-95 "Construction and Industrial Plywood."
   2. NIST PS-2-95 "Performance Standards for Wood-Based Structural-Use Panels."
   3. NIST PS-20-99 "American Softwood Lumber Standard."
   4. NF&PA NDS-97 "Wood Construction and Supplement."
   5. AWPA "Wood Treatment Standards."

2.1 Materials:

A. Lumber: Factory grade-marked, dressed, seasoned dimension lumber, S4S, air-dried, maximum 19% moisture content complying with PS-20, dimensions indicated.
   1. Blocking, nailers and similar members: Standard Grade Western Dimension Lumber or Southern Pine species.
      a. Provide preservative treated lumber, where indicated.

B. Plywood: Factory grade-marked, complying with PS-1, square edge, 5/8" thick.
   1. APA-RATED SHEATHING EXP1.
      a. Provide Exterior Grade (EXT) plywood, where indicated.
      b. Provide fire-retardant treated plywood, where required by Building Code.

C. Oriented Strand Board (OSB): Factory grade-marked, complying with PS-2, square edge, 5/8" thick

2.2 Wood Treatment:

A. Preservative Treatment: Comply with applicable requirements of AWPA Standards C2 (Lumber).
   1. Pressure preservative treat lumber with water-borne preservatives, acceptable to authorities having jurisdiction, to a minimum retention of 0.25 pcf.
   2. Treat wood blocking, nailers and similar members in connection with roofing and flashing.
   3. Treat wood plates, blocking, furring and similar concealed members in contact with masonry or concrete.

B. Fire-Retardant Treatment: Comply with applicable requirements of AWPA Standards C27 (Plywood). Identify "fire-retardant-treated plywood" with appropriate UL classification marking.
   1. Treated materials shall meet "Interior Type A" FR-S ratings of not more than 25 for flame spread, smoke developed and fuel contributed when tested in accordance with UL 723 or ASTM E84, with no increase in flame spread and evidence of significant progressive combustion upon continuation of test for additional 30 minutes.

C. Kiln-dry all treated lumber and plywood materials after treatment to maximum 15% moisture content.

3.1 Installation:

A. Lumber: Provide wood blocking, nailers and similar members where shown and where required for attachment of other work and surface applied items. Attach to substrate as required to support applied loading.
   1. Use only sound, seasoned materials of longest practical lengths and sizes to minimize joints.
   2. Use materials free of warp. Make tight connections between members.

SECTION 07210 - BUILDING INSULATION

1.1 General: Provide building insulation as shown and specified.

2.1 Materials:

A. Extruded polystyrene foam rigid board insulation: Dow Chemical Co., 866-583-2583, internet www.dowbuildingmaterials.com
   1. Type: Dow "Styrofoam" Type IV, 1.6 pcf minimum density, 25 psi compressive strength complying with ASTM C 578, R-value equal 5 per inch of thickness. Provide lengths and widths as required to coordinate with space insulated.
   2. Perimeter foundation walls: Styrofoam SE, R-value indicated.

B. Glass fiber batt/blanket insulation: Owens Corning Corp., (800) 438-7465, internet www.owenscorning.com.
   1. Type: Owens Corning " Thermal Batt" Type I unfaced glass fibers and binders formed into flexible blankets or batts complying with ASTM C665,. Provide lengths and widths required to coordinate with spaces insulated.
   2. Exterior walls: Unfaced, R-value/thickness indicated
C. Vapor barrier membrane: Polyethylene, minimum 6 mils thick, complying with ASTM D 4397, maximum permeance rating of 0.13 perm.
   1. Joint tape: Pressure sensitive tape designed for sealing joints and penetrations of above and below grade vapor barrier sheets.
   2. Mounting tape: Double-faced pressure sensitive tape suitable for mounting vapor barriers to steel framing.

3.1 Installation:

A. General:
   1. Install insulation in accordance with manufacturer's recommendations for conditions of installation indicated. Install in single layer of required thickness over entire area to be insulated. Cut and fit tightly around obstructions. Fill all voids.
   2. Install exterior wall insulation continuous behind electrical boxes, conduit, piping and ductwork.

B. Foundation perimeter walls and slabs:
   1. Install rigid foam insulation vertically from top of slab to frost line or horizontally under slabs, extending a minimum 36" in from exterior walls.
   2. Protect insulation from displacement and damage during backfilling and slab placement

C. Exterior Walls:
   1. Install batt/blanket insulation full height at exterior wall framing. Use blanket widths and lengths that fill cavities formed by framing members and provide a friction fit between edges of insulation and metal framing members.
   2. Provide galvanized wire mesh or metal strapping to provide supplementary support when required to maintain insulation in permanent proper location.

D. Vapor Barriers:
   1. Install a single layer of vapor barrier membrane over the interior of exterior metal wall framing after installation of insulation. Secure with double faced tape at wall framing.
   2. Provide single unspliced material height. Horizontal joints not acceptable. Minimize vertical joints. Lap vertical joints and secure in place with joints taped. Provide tape sealed contact with door frames, window frames, piping, conduit, ductwork, registers and the vapor barrier.
   3. Seal all cuts and penetrations of vapor barrier membrane with tape before installing surface finishes.

SECTION 07240 -EXTERIOR INSULATION AND FINISH SYSTEM (PB)

1.1 General: Provide the exterior insulation and finish system (EIFS) as shown and specified.

A. Standards: Materials and construction shall conform to the following:
   1. EIMA (EIFS Industry Members Association) Standards and Publications.
      a. 101.01, 101.02, 101.03, 101.86, 105.01, 200.02.
      b. EIMA "Guideline Specification for Expanded Polystyrene (EPS) Insulation board."
B. Quality Assurance:
   1. System components:
      a. Produced by a single manufacturer or by manufacturers approved by the EIFS system manufacturer.
      b. Fire performance: Flame spread of 25 or less, smoke developed of 450 or less when tested in accordance with ASTM E84.
   2. Installer Qualifications: Performed by the system manufacturer or an applicator trained and approved by the system manufacturer. During application, the work shall be inspected by system manufacturer's representative.
C. Environmental conditions: Comply with manufacturer's requirements. Do not install materials during wet or freezing weather.

2.1 Materials

A. Manufacturer: STO Corp., P: (800) 221-2397, internet www.stocorp.com
   Strategic Accounts Manager: Ray Redmond, P: (616) 437-2230, rredmond@stocorp.com

B. Exterior insulation and finish system: Sto Class PB "StoTherm ci" EIFS.
   1. Air/Moisture barrier: Sto Guard system.
      a. Sto RapidGuard for rough opening protection, sheathing joints and inside and outside corners.
      b. Sto Guard Mesh: Coated glass fiber fabric reinforcing mesh.
      c. Sto Gold Coat: Waterproof Fluid Applied Air/Moisture Barrier
   2. Primer/adhesive and base coat: Sto Primer/Adhesive-B, one-component, polymer modified, cement -based factory blended primer/adhesive used to attach insulation board to prepared sheathing substrates and as a base coat in Essence claddings.
   3. Insulation board: ASTM C578 Type 1, nominal 1.0 lb/ft^2 expanded polystyrene meeting EIMA Guideline specifications for EPS insulation board.
   4. Finish coating: Sto Essence DPR, ready-mixed 100% acrylic-based, textured wall coating.
      a. Medium/Fine Sand Finish.
      b. Color integrated into finish coat as indicated on the Architectural drawings.
   5. System warranty: 10 year labor and material.

C. Portland cement: ASTM C150, Type I or II, white or gray in color.

D. Water: Clean, potable and free of foreign matter.

E. Reinforcing mesh: Sto open-weave glass fiber fabric with alkaline resistant coating.
   1. Standard mesh: Sto Mesh, nominal 4.5 oz/yd^2 fabric.
   2. Ultra-High impact mesh: Sto Armor Mat, nominal 15 oz/yd^2 ultra-high impact fabric.
   3. Specialty mesh:
      a. Sto Detail Mesh, nominal 4.2 oz/yd^2 flexible, symmetrical, interlaced glass fiber fabric.
      b. Sto Corner Mat, nominal 7.8 oz/yd^2 pre-creased, heavy-duty, glass fiber fabric.

F. Joint sealants: StoSeal STPE Sealant complying with ASTM C920 and Section 07900 requirements.
   1. Adhesion: Evaluated in accordance with ASTM C1382.
   2. Color: Matching EIFS finish coating color, and visually acceptable to the Architect.

G. Accessories: Provide plastic stops and trim as indicated. Materials shall be compatible with EIFS and acceptable to manufacturer.
   1. Starter Track: Rigid PVC plastic track with weepholes and drip edge.

3.1 Mixing

A. Mix materials in accordance with manufacturer's published instructions.
   1. Mix with a clean, rust-free high speed mixer to a uniform consistency.
   2. No rapid binder, anti-freeze or accelerator additives permitted.

4.1 Installation

A. Preparation:
   1. Coordinate installation of roofing membrane, windows, doors and other penetrations to provide a continuous exterior wall air/moisture barrier.
   2. Coordinate installation of windows, doors and flashing to provide continuous exterior wall air/moisture barrier.
   3. Install copings and joint sealants immediately after installation of the EIFS, when EIFS coatings are dry.

B. Installation: Install Sto Guard air/moisture barrier system and exterior insulation and finish system (EIFS) in strict accordance with manufacturer's installation instructions, complying with governing regulations and industry standards applicable to the work.
   1. Back wrap exposed board edges with mesh.
   2. Provide double wrap or corner mat reinforcing at all inside and outside corners.
   3. Provide expansion joints in accordance with manufacturer's recommendations for type of substrates and systems required, and visually acceptable to the Architect.
   4. Provide drainable starter track horizontal edge trim as base of wall, above windows and doors openings and beneath windows with concealed flashing.

C. Insulation and adhesive application:
   1. Install insulation board with long edge horizontal using running bond pattern. Off set insulation joints with substrate joints. Stagger joints and interlock joints at corners.
   2. Apply adhesive to insulation board with a stainless steel trowel notched trowel, providing vertical uniform ribbons of adhesive when board is installed. Mount insulation board on substrate. Level, align and tamp insulation in place. Provide uniform contact and bond with joints tightly butted. Rasp edges and high areas as required to produce a level, plane surface.

D. Base coat and reinforcing mesh application:
   1. Apply detail mesh at corners of windows, doors, and all penetrations through the EIFS.
   2. Standard mesh: Apply base coat over insulation board to a uniform 1/8 inch thickness, including high impact mesh where indicated. Embed standard reinforcing mesh into wet adhesive, lap edges at seams. Smooth surface until mesh is not visible. Allow to base coat to dry.
   3. Ultra-High impact mesh: Apply base coat over insulation board to a uniform 1/8 inch thickness. Fully embed ultra-high impact reinforcing mesh into wet adhesive, butt edges at seams. Smooth surface until mesh is not visible. Allow to base coat to dry. Locate at 4'-0" wide perimeter of the rear service door to 6'-0" above grade and as indicated on Architectural drawings.

E. Apply finish coating continuously in one operation to the entire wall surface Provide a uniform finished appearance. Level and texture to the specified finish texture.

F. Install joint sealants at perimeter joints and joints within the system using elastomeric joint sealants, in accordance with drawing details and sealant manufacturer's recommendations.

SECTION 07250 - WEATHER BARRIERS

1.1 Section Includes

A. Weather barrier membrane
B. Seam Tape
C. Flashing
D. Fasteners

1.2 References

A. ASTM International
   1. ASTM C920; Standard Specification for Elastomeric Joint Sealants
   2. ASTM C1193; Standard Guide for Use of Joint Sealants
   3. ASTM D882; Test Method for Tensile Properties of Thin Plastic Sheeting
   4. ASTM D1117; Standard Guide for Evaluating Non-woven Fabrics
   5. ASTM E84; Test Method for Surface Burning Characteristics of Building Materials
   6. ASTM E96; Test Method for Water Vapor Transmission of Materials
   7. ASTM E1677; Specification for Air Retarder Material or System for Framed Building Walls.
   8. ASTM E2178; Test Method for Air Permeance of Building Materials

B. AATCC - American Association of Textile Chemists and Colorists
   1. Test Method 127 Water Resistance: Hydrostatic Pressure Test

C. TAPPI
   1. Test Method T-410; Grams or Paper and Paperboard (Weight per Unit Area)
   2. Test Method T-460; Air Resistance (Gurley Hill Method)

1.3 Quality Assurance

A. Qualifications
   1. Installer shall have experience with installation of commercial weather barrier assemblies under similar conditions.
   2. Installation shall be in accordance with weather barrier manufacturer's installation guidelines and recommendations.
   3. Source Limitations: Provide commercial weather barrier and accessory materials produced by single manufacturer.

1.4 Delivery, Storage and Handling

A. Refer to Section 01400 Quality Requirements.
B. Deliver weather barrier materials and components in manufacturer's original, unopened, undamaged containers with identification labels intact.
C. Store weather barrier materials as recommended by weather barrier manufacturer.

1.5 Scheduling

A. Review requirements for sequencing of installation of weather barrier assembly with installation of windows, doors, louvers and flashings to provide a weather-tight barrier assembly.
B. Schedule installation of weather barrier materials and exterior cladding within 9 months of weather barrier assembly installation.

2.1 Manufacturer

A. DuPont Building Innovations; 4417 Lancaster Pike, Chestnut Run Plaza 721, Wilmington, D19805; 1.800.44TYVEK (8-9835); http://constructiontyvek.com

2.2 Materials

A. Basis of Design: Hi-performance, spunbonded polyolefin, non-woven, non perforated, weather barrier is based upon DuPont Tyvek CommercialWrap and related assembly components.
   1. Refer to Section 07240 or 092423 for StoGuard System which is an acceptable alternate option for weather barriers as allowed by manufacturer's details.

B. Performance Characteristics:
   1. Air Penetration: 0.001 CFM/feet squared at 75 Pa, when tested in accordance with ASTM E2178. Type I per ASTM E1677.
   2. Water Vapor Transmission: 28 perms, when tested in accordance with ASTM E96 Method B.
   3. Water Penetration Resistance: 280 cm when tested in accordance with AATCC Test Method 127.
   4. Basis Weight: 2.7 oz/yard squared, when tested in accordance with TAPPI Test Method T-410.
   5. Air Resistance: Air infiltration at >1500 seconds, when tested in accordance with TAPPI Test Method T-460.
   6. Tensile Strength: 38/35 lbs/inch, when tested in accordance with ASTM D882, Method A.
   7. Tear Resistance: 12/10 lbs., when tested in accordance with ASTM D1117.
   8. Surface Burning Characteristics: Class A, when tested in accordance with ASTM E 84. Flame Spread: 10, Smoke Developed: 10.

2.3 Accessories

A. Seam Tape: 3 inch wide, DuPont Tyvek Tape for commercial applications.

B. Fasteners:
   1. For steel frame construction - DuPont Tyvek Wrap Cap Screws, as manufactured by DuPont Building Innovations: 1-5/8" rust resistant screw with 2-inch diameter plastic cap or manufacturer approved 1-1/4" or 2" metal gasketed washer.
   2. For wood frame construction - Tyvek Wrap Caps, as manufactured by DuPont Building Innovations: #4 nails with large 1-inch plastic cap fasteners.
   3. For masonry construction - masonry tap-con fasteners with Tyvek Wrap Caps as manufactured by DuPont Building Innovations: 2 inch diameter plastic cap fasteners.

C. Adhesives:
   1. Provide adhesive recommended by weather barrier manufacturer.
   2. Products:
      a. Liquid Nails LN-109
      b. Polyglaze SM 5700
      c. Denso Butyl Liquid
      d. 3M High Strength 90
      e. SIA 665
      f. Adhesives recommended by the weather barrier manufacturer.

D. Primers:
   1. Provide flashing manufacturer recommended primer to assist in adhesion between substrate and flashing.
   2. Product:
      a. 3M High Strength 90
      b. Denso Butyl Spray
      c. SIA 655
      d. Permagrip 105
      e. ITW TACC Sta' Put SPH
      f. Primers recommended by the flashing manufacturer.

E. Flashing:
   1. DuPont FlexWrap, as manufactured by DuPont Building Innovations: flexible membrane flashing materials for window openings and penetrations.
   2. DuPont Straightflash, as manufactured by DuPont Building Innovations: straight flashing membrane materials for flashing windows and doors and sealing penetrations such as masonry ties, etc.
   3. DuPont Straightflash VF, as manufactured by DuPont Building Innovations: dual-sided straight flashing membrane materials for brick mold and non-flanged windows and doors.

3.1 Examination
A. Verify substrate and surface conditions are in accordance with weather barrier manufacturer recommended tolerances prior to installation of weather barrier and accessories.

3.2 Installation - Weather Barrier
A. Install weather barrier per regional requirements in accordance with manufacturer recommendations.
B Install weather barrier prior to installation of windows and doors.
C. Start weather barrier installation at a building corner, leaving 6-12 inches of weather barrier extended beyond corner to overlap.
D. Install weather barrier in a horizontal manner starting at the lower portion of the wall surface with subsequent layers installed in a shingling manner to overlap lower layers. Maintain weather barrier plumb and level.
E. Sill Plate Interface: Extend lower edge of weather barrier over sill plate interface 3-6 inches. Secure to foundation with elastomeric sealant as recommended by weather barrier manufacturer.
F. Window and Door Openings: Extend weather barrier completely over openings.
G. Overlap weather barrier
   1. Exterior corners: minimum 12 inches.
   2. Seams: minimum 6 inches.
H. Weather barrier Attachment:
   1. For steel or wood frame construction - Attach weather barrier to studs through exterior sheathing. Secure using weather barrier manufacturer recommended fasteners, space 12-18 inches vertically on center along stud line, and 24 inch on center, maximum horizontally.
   2. For masonry construction - Attach weather barrier to masonry. Secure using weather barrier mfr recommended fasteners, spaced 12-18 inches vertically on center and 24 inches maximum horizontally. Weather barrier may be temporarily attached to masonry using recommended adhesive, placed in vertical strips spaced 24 inches o.c., when coordinated on the project site.
I. Apply 4 inch by 7 inch piece of DuPont StraightFlash to weather barrier membrane prior to the installation cladding anchors.

3.3 Seaming

A. Seal seams of weather barrier with seam tape at all vertical and horizontal overlapping seams.
B. Seal any tears or cuts as recommended by weather barrier manufacturer.

3.4 Opening Preparation (for use with non-flanged windows - all cladding types)

A. Flush cut weather barrier at edge of sheathing around full perimeter of opening.
B. Cut a head flap at 45-degree angle in the weather barrier at window head to expose 8 inches of sheathing. Temporarily secure weather barrier flap away from sheathing with tape.

3.5 Flashing (for use with non-flanged windows - all cladding types)

A. Cut 9-inch wide DuPont FlexWrap a min of 12 inches longer than width of sill rough opening. Apply primer as required by mfr.
B. Cover horizontal sill by aligning DuPont FlexWrap edge within side edge of sill. Adhere to rough opening across sill and up jambs a minimum of 6 inches. Secure flashing tightly into corners by working in along the sill before a adhering up the jambs.
C. Fan DuPont FlexWrap at bottom corners onto face of wall. Firmly press into place. Mechanically fasten fanned edges.
D. Apply 9-inch wide strips of DuPont StraightFlash at jambs. Align flashing with interior edge of jamb framing. Start DuPont StraightFlash at head of opening and lap sill flashing down to the sill. Spray-apply primer to top 6 inches of jambs and exposed sheathing.
E. Install DuPont FlexWrap at opening head using same installation procedures used at sill. Overlap jamb flashing min 2 inches.
F. Coordinate flashing with window installation.
G. On exterior, install backer-rod in joint between window frame and flashed rough framing. Apply sealant at jambs and head. leaving sill unsealed. Apply sealants in accordance with sealant manufacturer's instructions and ASTM C 1193.
H. Position weather barrier head flap across head flashing. Adhere using 4-inch wide DuPont StraightFlash over the 45-degree seams.
I. Tape top of window in accordance with manufacturer recommendations.
J. On interior, install backer rod in joint between frame of window and flashed rough framing. Apply sealant around entire window to create air seal. Apply sealant in accordance with sealant manufacturer's instructions and ASTM C 1193.

3.6 Protection
A. Protect installed weather barrier from damage.

SECTION 07540 - THERMOPLASTIC MEMBRANE (PVC) ROOFING

1.1 General: Provide the thermoplastic membrane (PVC) roofing system as shown and specified.

A. Standards: Materials and construction shall conform to following:
   1. ASTM D5036 "Application of Adhered Poly(Vinyl Chloride) Sheet Roofing."
   2. FM 1-29 Loss Prevention Data Adhered or Mechanically Attached Single Ply Membrane Roof Systems."
   3. NRCA "Single-Ply Roofing Membrane."
   4. UL "790 - Tests for Fire Resistance of Roof Covering Materials."

B. Installer Qualifications: An experienced roofing installer approved by roofing system manufacturer and with not less than five years of successful experience installing membrane roofing systems similar to those required for this project.

C. Deliver, store and handle roof system materials in accordance with manufacturer's recommendations to avoid damage and deterioration.
   1. Comply with manufacturer's recommendations for handling and protection during installation.

D. Install roofing work only when weather conditions are in compliance with manufacturer's specific environmental requirements and conditions will permit work to be performed in accordance with manufacturer's recommendations and warranty requirements.
   1. Protect adjacent materials and surfaces from damage and soiling during roofing system installation.
   2. Provide special protection on completed roofing work.
   3. Protect paving and structure walls adjacent to hoists before starting work.
   4. Do not overload the building structure with storage of materials or installation equipment on the substrate decking.

E. Warranty
   1. Contractor and roof system installer shall jointly warrant roofing materials and installation for a period of two years from the date of Substantial Completion. Warranty shall include roofing membrane, flashing, roof insulation, roofing accessories and sheet metal work provided under Section 07600.
   2. Manufacturer's warranty: Submit executed copy of roofing system manufacturer's 15 year total system warranty, including labor and materials for the entire roof system. Including perimeter edge metal, Section 07600 Flashing & Sheet Metal

2.1 Materials

A. Manufacturer: Duro-Last Roofing, Inc, (800)248-0280, Austin Russell, HYPERLINK "mailto:austin.russell@holcim.com"austin.russell@holcim.com, www.duro-last.com
   1. Basis of Design Product Roofing System
      a. Thermoplastic single ply membrane roofing system: DL Membrane (PVC) fully adhered, smooth surface, UL Class A fire-rated single ply membrane roofing system.
      b. Thermoplastic fiber reinforced PVC membrane, not less than 40 mils (.040), complying with ASTM D4434 and membrane manufacturer's published physical properties.

B. Comparable Alternate Roof Manufacturers:
   1. Versico Roofing Systems, (480) 528-6923, Jeff Kelly, jeff.kelly@versico.com
      a. VersiFlex PVC Adhered System
   2. Other comparable alternates can be considered when approved by Arch PM and Chipotle DM/CM.

C. The roof covering design must resist a wind load of 100 mph, Exposure C (at min) and shall resist impact damage based on results of tests based on the results of tests conducted in accordance with ASTM D 3746, ASTM D 4272, CGSB 37-GP-52M or FM 4470
   1. Insulation cover board: Georgia-Pacific Corp. (800) 284-5347, internet www.gp.com, "Dens-Deck" nonstructural fiberglass- faced, silicone-treated gypsum core panels, 1/2"" thickness.
   2. Roof insulation: Rigid closed cell polyisocyanurate boards approved by the membrane manufacturer; complying with ASTM C1289, Type II, minimum 20 psi compressive strength, aged R-value equal 5.6 per inch of thickness.
      a. Provide a double layer installation. Minimum total R-value as indicated on plans.
      b. Specified perimeter edge metal shall be compliant with International Building Code ANSI / SPRI ES-1, ER2 testing requirements.
   3. Flashing: Roof system manufacturer's standard sheet flashing of same material, type, and color as sheet membrane. Specified perimeter edge metal will be compliant with International Building Code ANSI / SPRI ES-1, RE2 testing requirements.
   4. Membrane Bonding Adhesive: Roof system manufacturer's standard membrane bonding adhesive.
   5. Insulation and Cover Board Adhesive: Dow Chemical Company, (888) 868-1183, internet www.flexibeproducts.com, "INSTA-STIK Professional Roof Insulation Adhesive", a single component, moisture cured polyurethane adhesive.
   6. Fasteners: Roof system manufacturer's standard fasteners for project conditions indicated.
   7. Accessories: Roof system manufacturer's recommended pourable sealers, preformed penetration flashing, preformed corner flashing, seam caulk, termination bars and other accessories required for substrate surfaces and installation conditions indicated.
   8. Traffic walkways: Duro-Last Roof Track II walkway pads.3.1Installation

3.1 Installation

A. Preparation:
   1. Clean substrate surfaces of debris and other substances detrimental to roofing installation.
   2. Correct unsatisfactory conditions before starting roofing. Roof deck surface conditions shall comply with manufacturer's requirements and be acceptable to the roofing system installer.

© COPYRIGHT WILKUS ARCHITECTS

CONSULTANT

WILKUS ARCHITECTS

CLIENT

Alliance DEVELOPMENT

FRED JACQUES
ALLIANCE DEVELOPMENT
230 OHIO ST, SUITE 200
OSHKOSH, WI 54902
(612) 313-0126

PROJECT INFORMATION

SOUTH LA CROSSE SHELL
MORMON COULEE RD & LOSEY BLVD S
LA CROSSE, WI 54601

SEAL

NOT FOR CONSTRUCTION

PROJECT NO.	2025-0394
DRAWN BY	BEH
CHECKED BY	SAS

ISSUE	DATE
PERMIT SET	01/09/2026

REVISION	DATE

TITLE:
ARCHITECTURAL SPECIFICATIONS

SHEET NUMBER:
G012

B. Installation:
1. General: Provide roofing system materials and installation complying with roofing system manufacturer's instructions and governing codes and regulations.
   a. Mix and apply roof insulation and cover board adhesive in strict accordance with the adhesive manufacturer's installation instructions. Dispense adhesive at manufacturer's recommended application rate using approved dispensing equipment.
2. Roof insulation.
   a. Extend insulation full thickness over entire surface to be insulated. Cut and fit around obstructions; fill all voids with insulation. Provide saddles and tapered edges as required to provide positive proper drainage.
   b. Install and secure in place with insulation adhesive, a double layer of insulation units of the required thickness. Run long joints of insulation in continuous straight lines, perpendicular to roof slope, with end joints staggered between rows. Stagger joints of each layer of insulation. Butt edges to moderate contact. Limit joints between adjacent units to maximum 1/4".
3. Insulation cover board: Install and secure in place with insulation adhesive a single layer of insulation cover board on installed roof insulation. Secure cover board in accordance with membrane manufacturer's recommendations. Stagger joints with joints of roof insulation.
4. Thermoplastic membrane: Comply with membrane manufacturer's instructions and recommendations for handling and installing single ply membrane roofing.
   a. Unroll and position roofing sheet membrane without stretching. Align top sheet with pr-marked lines on bottom sheet. Allow membrane to "relax" for at least 30 minutes before adhering, splicing and flashing.
   b. Adhere membrane to insulation cover board with bonding adhesive. Broom bonded membrane to achieve maximum contact.
   c. Join membrane seams using approved heat welding equipment. Check all splices for voids and repair voids with heat gun and roller.
   d. When required, mechanically fasten membrane at roof perimeter, curb flashing and similar penetrations in accordance with manufacturer's installation instructions.
   e. Flash and make weathertight all equipment curbs, pipes, conduits, drains and other penetrations or projections through sheet roofing using roofing system manufacturer's recommended flashing materials, accessories and procedures.
5. Install roof accessories and traffic walkways in accordance with manufacturer's instructions.
6. Install sheet metal work furnished under section 07600.

SECTION 07600 - FLASHING AND SHEET METAL

General:

A. Standards: Materials and construction shall conform to following:
1. SMACNA "Architectural sheet Metal Manual- 1993."

B. Installation: Performed under Section 07540 work.

1.1 Pre-manufactured perimeter edge metal and accessories

Manufacturer: Duro-Last Roofing / Exceptional Metals, Inc, (800) 248-0280, Jason Dark, www.Duro-Last.com

A. Duro-Last / Exceptional Metals Snap Coping made with a 24-gauge galvalume cover provided with Kynar (PVDF) architectural finish providing a 35-year finish warranty. Meets ANSI/SPRI ES-1 2003 method RE-2 testing requirements.
B. Duro-Last / Exceptional Metals 2-Piece Compression Edge made with a 24-gauge galvalume cover provided with Kynar (PVDF) architectural finish providing a 35-year finiah warranty. Meets ANSI/SPRI ES-1 2003 method RE-2 testing requirements.
C. Duro-Last / Exceptional Metals Vinyl backed scupper, conductor boxes and downspouts as indicated in drawings.

1.2 General: Miscellaneous sheet metal

A. Standards: Materials and construction shall conform to following:
1. SMACNA "Architectural sheet Metal Manual- 1993."

B. Installation: Performed under Section 07540 work.

2.1 Materials:

A. Prefinished Galvalume 24-gauge steel, for colors refer to Exterior Elevations:
1. Coping/Wall Cap
2. Scuppers
3. Conductor Boxes
4. Downspouts

B. Joint sealers: One-component silicone elastomeric joint sealant complying with ASTM C920. Color matched to sheet metal finish.
C. Metal accessories: Provide sheet metal fasteners, clips, straps, anchoring devices and similar accessory units as required for installation of work, matching or compatible with material installed, non-corrosive, size and gage as required for performance and acceptable to the Architect.
D. Fabrication: Shop fabricate sheet metal work to comply with profiles and sizes indicated and to comply with standard industry standards as shown by SMACNA in the "Architectural Sheet Metal Manual."
1. Conductor boxes: SMACNA Chapter 1 - Roof Drainage Systems. Profile and size indicated Fig 1-25.
2. Scuppers: SMACNA Chapter 1 - Roof Drainage Systems. Profile and size indicated Fig 1-20.
3. Downspouts: SMACNA Chapter 1 - Roof Drainage Systems. Profile and size indicated. Installation Fig. 1-31 with strap hanger Fig. 1-35.
4. Formed coping/wall caps: SMACNA Chapter 3 - Copings. Design Fig 3-1. Profile and size indicated with Fig. 3-3 butt joints and concealed back-up plates. Install formed copings with continuous cleat fasteners similar to Fig 3-1 at exposed face and screw fasteners with washers space maximum 24" on center at roof side.

3.1 Installation:

A. Preparation: Coordinate sheet metal work with other work for the correct sequencing of items which make up the entire roof system of weatherproofing and rain drainage:
B. Installation: Comply with SMACNA "Architectural Sheet Metal Manual" recommendations, drawing details and approved shop drawings for installation of the work.
1. Anchor sheet metal items securely in place by methods indicated, providing for thermal expansion. Conceal fasteners and expansion provisions whenever possible. Install joint sealants where required.
2. Set units true to lines and levels indicated. Install work with sealed laps, joints and seams that will be permanently watertight and weatherproof. Bed flanges of sheet metal work in thick coat of roofing cement or sealant compatible with roofing membrane.
3. Separate sheet metal work from dissimilar metals and treated wood materials. Provide rosin-sized paper slipsheet over treated wood.
4. Fabricate, support and anchor conductor boxes and downspouts to withstand thermal expansion, stresses and full loading by ice or water without damage, deterioration or leakage.

Section 07900 – JOINT SEALERS

1.1 General: Provide joint sealers as shown and specified.

A. Standards:Comply with ASTM C 920 requirements.

B. Application: Performed by skilled, experienced joint sealer applicators.

2.1 Materials:

A. Poly urethane sealants:
1. Tremco Commercial Sealants (800) 321-7906, internet www.tremcosealants.com,
   a. "Dymonic FC" One component, fast skinning, Low Modulus Polyurethane.
   b. "Dymeric 240 FC" Multi Component, gun grade, chemically curing, tintable fast setting polyurethane sealant.
2. Sonneborn, (724) 756-9582, internet www.sonneborn.com
   a. Color pack for polyurethane multi component, gun grade chemically curing sealant.

B. Silicone Sealants:
1. General Electric Silicones, (800) 295-2392, internet www.gesilicones.com
   a. "SCS1700 Sanitary – Mold/Mildew Resistant Silicone", one component 100% silicone, fungicidal based sealant.
   b. "SCS2700 Silpruf Silicone" one component medium modulus, natural cure silicone all purpose sealant.
   c. "Silglaze II SCS2800- Glazing Sealant" one component, 100% silicone based sealer.
   d. "GE Paintable Silicone" one component paintable silicone.
   e. "SCS1009 Silicone Sealant" one-component acetoxy silicone for general purpose sealing and bonding
2. Dow Corning Silicones, (989)496-4000, www.dowcorning.com
   a. "Dow 795" – one component, medium modulus, natural cure silicone.

C. Firestopping Sealants: 3M Fire Protection Products, (800) 328-1687, internet www.3M.com/firstop
1. "3M Fire Barrier CP 25WB+ Caulk" or approved equal

D. Joint backing: Non-absorptive, non-staining compressible, non-gassing, polyethylene foam backer rod compatible with joint sealants.

3.1 Installation:

A. Preparation: Clean and prepare joints prior to installing sealers:
1. Wipe shipping oils from surfaces to be sealed. Remove protective films and/or install joint backer rod if joint is larger than ¼" in width.

B. Installation: Install joint sealant materials in strict accordance with manufacturer's installation instructions.
1. Apply sealants in a uniform, continuous bead without gaps or air pockets. Hand tool and finish all joints so that a smooth, small, lip free uniform line is created along the substrate being shot. Remove any excess materials from tooled edges and ends of joint.
2. Install joint sealants to a depth no more than ½ the width of the joint.
3. Install sealants by proven techniques that result in sealants directly contacting and fully wetting joint substrates, completely filling recesses provided for each joint configuration, and providing uniform, cross-sectional shapes and depths relative to joint widths which allow optimum sealant movement capability.
4. Immediately, after sealant application, and prior to time skinning or curing begins, tool sealants to form smooth, uniform beads of configuration indicated to eliminate air pockets, and to ensure contact and adhesion of sealant with sides of joint. Remove excess sealants from surfaces adjacent to joint. Do not use tooling agents which discolor sealants or adjacent surfaces or are not approved by sealant manufacturer.
5. Clean off excess sealants or sealant smears adjacent to joints as work progresses by methods and with cleaning materials approved by manufacturers of joint sealers and of products in which joints occur.

4.1 Sealant Schedule:

A. Exterior Joints:
- Provide a continuous bead of Tremco Dymeric limestone urethane sealant at the following locations:
  1. Sidewalk/concrete expansion joints.
- Provide a continuous bead of Dow 795 silicone or Tremco Dymeric 240 FC at the following locations:
  1. Hollow metal door frames.
  2. EIFS to abutting services.
  3. Penetrations in EIFS.
  4. Face brick or block control joints.
  5. Perimeter of Aluminum Storefronts.

  *Colors to be determined per store to match adjacent material colors. Verify with Chipotle Construction Manager and Architect.
  - For "Pegasus" EIFS use Tremco - "Natural White"
  - For Sienna Ironspot Brick use Tremco - "Dark Bronze"
  - For White Brick use Tremco - "Precast White"
- Provide a continuous bead of aluminum GE SCS1009 silicone at the following location:
  1. CO2 fill port stainless box.
  2. Faucet for hose. (Please note: color to be determined per store. Verify with Chipotle Construction Manager and Architect).

DIVISION 8 - DOORS AND WINDOWS

SECTION 08110 - STEEL DOORS AND FRAMES

1.1 General: Tenant to provide steel doors and frames as shown and specified.

A. Standards: Materials and construction shall conform to the following:
1. ANSI A250.8-2009 "Specifications for Standard Steel Doors and Frames."
2. ANSI A250.11-01 "Erection Instructions for Steel Frames."
3. SDI 122-99 " Installation for Standard Steel doors and Frames.

B. Manufacturer: A member of the Steel Door Institute (SDI).

2.1 Materials:

A. Steel Doors:
1. Exterior: Extra heavy-duty Level 3, physical performance A, Model 2 seamless construction, ASTM A1008, 16 gage cold-rolled steel face sheets; tops and bottoms closed with flush galvanized steel caps, manufacturer's standard plastic foam insulating core.

B. Steel Frames: ASTM A1008, 16 gage cold-rolled steel.
1. Provide combination buck, jamb and trim type frames for 1-3/4" thick doors, unless otherwise indicated.
2. Interior and exterior frames: Set-up welded type with mitered corners, reinforced, fully seam welded with exposed welds ground smooth.

C. Door and frame fabrication:
1. Provide cutouts for mortised hardware, accurately located and made to fit hardware. Provide closer reinforcement for all doors with surface mounted door closers.
2. Punch frames and factory install rubber door silencers.
3. Provide minimum three anchors of suitable design for each jamb.
4. Provide floor clip on bottom of each jamb. Provide angle spreaders at bottom of each set-up frame.

D. Shop painting: Clean and paint exposed surfaces of steel door and frame units. Apply one baked-on shop coat of rust-inhibitive prime paint in accordance with ANSI A250.10, unless doors and frames are used at the restrooms or as indicated on door hardware and finish schedule. Provide a uniformly finished surface ready to receive finish paint.

3.1 Installation:

A. Install frames plumb, level, rigid, and in true alignment as recommended in ANSI A250.11.

B. Install doors plumb and in true alignment and fastened to achieve the maximum operational effectiveness and appearance as recommended in SDI 122.

SECTION 084113 - ALUMINUM-FRAMED ENTRANCES AND STOREFRONTS

1.1 General: Provide aluminum entrances and storefronts as shown and specified.

1.2 Related Documents:

A. Drawings and general provisions of the Contract, including General and Supplementary Conditions and Division 01 Specification Sections, apply to this section.

B. Standards: Materials and construction shall conform to the following:
1. AAMA SFM-1-87 "Aluminum Storefront and Entrance Manual."

1.3 Summary:

A. Section includes:
1. Storefront Systems
2. Storefront Entry Systems
3. Brake Metal Trim

1.4 Performance Requirements:

A. General Performance: Aluminum-framed storefront system shall withstand the effects of the following performance requirements without exceeding performance criteria or failure due to defective manufacture, fabrication, installation, or other defects in construction;
1. Design Wind Loads: Determine design wind loads applicable to the Project from basic wind speed indicated in miles per hour, according to ASCE 7, Section 6.5, "Method 2-Analytical Procedure," based on mean roof heights above grade indicated on Drawings.
   a. Basic Wind Speed (MPH): Determine to meet local codes listed on A000
   b. Importance Factor: (1.00)
   c. Exposure Category (A, B, C, D): Determine to meet local codes listed on A000

B. Storefront System Performance Requirements:
1. Wind loads: Provide storefront system; include anchorage, capable of withstanding inward and outward wind load design pressures meeting local codes listed on sheet A000.
2. Air Infiltration:
   a. Air Infiltration for storefront frame system: The test specimen shall be tested in accordance with ASTM E 283. Air infiltration rate shall not exceed 0.06 cfm/ft. sq. at a static air pressure differential of 6.24 psf.
   b. Air Infiltration for storefront entrances: For single acting offset pivot or butt hung entrances in the closed and locked position, the test specimen shall be tested in accordance with ASTM E 283 at a pressure differential of 6.24 psf (300 Pa) for single doors and 1.567 psf (75 PA) for pairs of doors. A single 3'0" x 7'0" entrance door and frame shall not exceed 0.50 cfm per square foot. A pair of 6'0" x 7'0" entrance doors and frame shall not exceed 1.0 cfm per square foot.
3. Water Resistance: The test specimen shall be tested in accordance with ASTM E 331. There shall be no leakage at a minimum static air pressure differential of 8 psf as defined in AAMA 501.
4. Uniform Load: A static air design load of 20 psf shall be applied in the positive and negative direction in accordance with ASTM E 330. There shall be no defection in excess of L/175 of the span of any framing member. At a structural test load equal to 1.5 times the specified design load, no glass breakage or permanent set in the framing members in excess of 0.2% of their clear spans shall occur.
5. Thermal Transmittance (U-factor): When tested to AAMA Specification 1503, the thermal transmittance (U-factor) shall be not more than:
   a. Glass to Exterior - 0.47 (low-e)
6. Condensation Resistance (CRF): When tested to AAMA Specification 1503, the condensation resistance factor shall not be less than:
   a. Glass to Exterior - 70 frame and 69 glass (low-e)
7. Sound Transmission Class (STC) and Outdoor-Indoor Transmission Class (OITC): When tested to AAMA Specification 1801 and in accordance with ASTM E1425 and ASTM E90, the STC and OITC Rating shall not be less than:
   a. Glass to Exterior - 38 (STC) and 31 (OITC)

1.5 Submittals:

A. Product Data: Include construction details, material descriptions, dimensions of individual components and profiles, hardware, finishes, and installation instructions for each type of aluminum frame storefront system and storefront entrance doors indicated.

B. Shop Drawings: Include plans, elevations, sections, details, hardware, and attachments to work, operational clearances and installation details.

C. Samples for Initial Selection: For units with factory-applied color finishes including samples of hardware and accessories involving color section.

1.6 Quality Assurance

A. Installer Qualifications: An installer which has had successful experience with installation of the same or similar units required for the project and other projects of similar size and scope

B. Manufacturer Qualifications: A manufacturer capable of providing aluminum framed storefront system that meet or exceed performance requirements indicated and of documenting this performance by inclusion of rest reports, and calculations.

C. Source Limitations: Obtain aluminum framed storefront system and storefront entrance doors through one source from a single manufacturer.

D. Product Options: Drawings indicate size, profiles, and dimensional requirements of aluminum framed storefront system and are based on the specific system indicated. Do not modify size and dimensional requirements.
1. Do not modify intended aesthetic effects, as judged solely by Architect, except with Architect's approval. If modifications are proposed, submit comprehensive explanatory data to Architect for review.

1.7 Project Conditions:

A. Field Measurements: Verify actual dimensions of a aluminum framed storefront openings by field measurements before fabrication and indicate field measurements on Shop Drawings.

1.8 Warranty

A. Manufactures Warranty: Submit, for Owner's acceptance, manufacturer's standard warranty.
1. Warranty Period: Two (2) years from Date of Substantial Completion of the project provided however that the Limited Warranty shall begin in no event later than six months from date of shipment by manufacturer.

2.1 Manufacturers:

A. Manufacturer: Kawneer Company Inc., Contact: Doug Hess, Phone: 317-771-9265; email:doug.hess@arconic.com

1. Basis-of-Design Product Storefront Framing:
   a. Trifab Versaglaze 451T (thermal) Storefront System
      i. 2" x 4-1/2" System Dimensions
      ii. Glass: Exterior (Front-Set)

2. Basis-of-Design Product Storefront Entrances:
   a. The door stile and rail face dimensions of the 500-Wide Stile entrance door will be as follows or as indicated on Drawings: Door: 500; Vertical Stile: 5"; Top Rail: 5"; Bottom Rail: 10"
   b. Major portions of the door members to be 0.125" nominal in thickness and glazing molding to be 0.05" thick.
   c. Glazing gaskets shall be either EPDM elastometric extrusions or a thermoplastic elastomer.
   d. Provide adjustable glass jacks to help center the glass in the door opening.

B. Alternate Storefront Systems only when approved by Arch PM and Chipotle DM.
1. YKK, YES 45 TU Storefront System - 2" x 4-1/2" nominal dimension; Thermal; Front-Set
2. Oldcastle, Series 3000 Thermal MultiPlane Storefront System - 2" x 4-1/2" nominal dimension; Thermal; Front-Set
3. US Aluminum, Series FT451 - 2" x 4-1/2" nominal dimension; Thermal; Front-Set
4. EFCO, Series 403 (T) Storefront System - 2" x 4-1/2" nominal dimension; Thermal
5. Wausau, TU24000 Storefront System - 2" x 4-1/2" nominal dimension; Thermal

2.2 Materials:

A. Provide aluminum entrances and storefront matching the existing building aluminum entrances and storefronts, unless otherwise indicated.

B. Aluminum Frame Extrusions: Alloy and temper recommended by aluminum storefront manufacturer for strength, corrosion resistance, and application of required finish and not less than 0.070" wall thickness at any location for the main frame and complying with ASTM B 221: 6063-T6 alloy and temper.

C. Aluminum Storefront Entrance Extrusions:Alloy and temper recommended by aluminum-framed glass door manufacturer for strength, corrosion resistance, and application of required finish and not less than 0.090" wall thickness at any location for the main frame and sash members.

D. Fasteners: Aluminum, nonmagnetic stainless steel or other materials to be non-corrosive and compatible with aluminum window and door members, trim hardware, anchors, and other components.

E. Anchors, Clips, and Accessories: Aluminum, nonmagnetic stainless steel, or zinc-coated steel or iron complying with ASTM B 633 for SC 3 severe service conditions, or other suitable zinc coating; provide sufficient strength to withstand design pressure indicated.

F. Reinforcing Members: Aluminum, nonmagnetic stainless steel, or nickel/chrome-plated steel complying with ASTM B 456 for Type SC 3 severe service conditions, or zinc-coated steel or iron complying with ASTM B 633 for SC 3 severe service conditions or other suitable zinc coating; provide sufficient strength to withstand design pressure indicated.

G. Sealant: For sealants required within fabricated storefront system, provide permanently elastic, non-shrinking, and non-migrating type recommended by sealant manufacturer for joint size and movement.

H. Tolerances: Reference to tolerances for wall thickness and other cross-section dimensions of storefront members are nominal and in compliance with AA Aluminum Standard Data.

2.3 Storefront Framing System:

A. Thermal Barrier: Thermal Break shall be designed in accordance with AAMA TIR-A8 and tested in accordance with AAMA 505.
1. Kawneer IsoLock Thermal Break with a 1/4" separation consisting of a two-part chemically curing, high-density polyurethane, which is mechanically and adhesively joined to aluminum storefront sections.

B. Brackets and Reinforcements: Manufacturer's standard high-strength aluminum with non-staining, nonferrous shims for aligning system components.

C. Fasteners and Accessories: Manufacturer's standard corrosion-resistant, non-staining, non-bearing fasteners and accessories compatible with adjacent materials. Where exposed shall be stainless steel.

D. Perimeter Anchors: When steel anchors are used, provide insulation between steel material and aluminum material to prevent galvanic action.

E. Packing, Shipping, Handling and Unloading: Deliver materials in manufacturer's original, unopened, undamaged containers with identification labels intact.

F. Storage and Protection: Store materials protected from exposure to harmful weather conditions. Handle storefront material and components to avoid damage. Protect storefront material against damage from elements, construction activities, and other hazards before, during and after storefront installation.

2.4 Glazing Systems:

A. Glazing: As specified in Section 08800 - Glazing.

B. Glazing Gaskets: Manufacturer's standard compression types; replaceable, extruded EPDM rubber.

C. Spacers and Setting Blocks: Manufacturer's standard elastomeric type.

D. Bond-Breaker Tape: Manufacturer's standard TFE-fluorocarbon or polyethylene material to which sealants will not develop adhesion.

E. Glazing Sealants: For structural-sealant-glazed systems, as recommended by manufacturer for joint type, and as follows:
1. Structural Sealant: ASTM C 1184, single-component neutral-curing silicone formulation that is compatible with system components with which it comes in contact, specifically formulated and tested for use as structural sealant and approved by a structural-sealant manufacturer for use in aluminum-framed systems indicated.
   a. Color: Black
2. Weatherseal Sealant: ASTM C 920 for Type S, Grade NS, Class 25, Uses NT, G, A, and O; single-component neutral-curing formulation that is compatible with structural sealant and other system components with which it comes in contact; recommended by structural-sealant, weatherseal-sealant, and aluminum-framed-system manufacturers for this use.
   a. Color: Matching structural sealant.

2.5 Entrance Door Systems:

A. Entrance Door Hardware: As specified in Section 08710 Door Hardware.

2.6 Accessory Materials:

A. Joint Sealants: For installation at perimeter of aluminum-framed systems, as specified in section 07900 - Joint Sealers

2.7 Storefront Framing Fabrication:

A. Framing Members, General: Fabricate components that, when assembled, have the following characteristics:
1. Profiles that are sharp, straight, and free of defects or deformations.
2. Accurately fit joints; make joints flush, hairline and weatherproof.
3. Means to drain water passing joints, condensation within framing members, and moisture migrating within the system to exterior.
4. Physical and thermal isolation of glazing from framing members.
5. Accommodations for thermal and mechanical movements of glazing and framing to maintain required glazing edge clearances.
6. Provisions for field replacement of glazing.
7. Fasteners, anchors, and connection devices that are concealed from view to greatest extent possible.

B. Mechanically Glazed Framing Members: Fabricate for flush glazing without projecting stops.

C. Structural-Sealant-Glazed Framing Members: Include accommodations for using temporary support device to retain glazing in place while structural sealant cures.

D. Storefront Framing: Fabricate components for assembly using manufacturers standard installation instructions.

E. After fabrication, clearly mark components to identify their locations in Project according to Shop Drawings.

2.8 Storefront Entrance Door Fabrication:

A. Fabricate aluminum-framed glass entrance doors in sizes indicated. Include a complete system for assembling components and anchoring doors.

B. Fabricate aluminum-framed glass doors that are reglazable without dismantling perimeter framing.
1. Door corner construction shall consist of mechanical clip fastening, SIGMA deep penetration plug welds and 1-1/8" long fillet welds inside and outside of all four corners. Glazing stops shall be hook-in type with EPDM glazing gaskets reinforced with non-stretchable cord.
2. Accurately fit and secure joints and corners. Make joints hairline in appearance.
3. Prepare components with internal reinforcement for door hardware.
4. Arrange fasteners and attachments to conceal from view.

C. Weather Stripping: Provide weather stripping locked into extruded grooves in door panels or frames as indicated on manufactures drawings and details.

2.9 Aluminum Finishes:

A. Finish designations prefixed by AA comply with the system established by the Aluminum Association for designating aluminum finishes.

B. Factory Finishing:
1. Anodized; Kawneer Permanodic® AA-M10C21A44, AAMA 611, Architectural Class I Color Anodic Coating (Color Black)
2. Finishing for alternate storefront specifications to be verified by Arch PM and Chipotle DM

2.10 Brake Metal Trim, min 18ga:

A. Shop Drawings: Show layout and elevations, dimensions and thickness of panels, connections, details and location of joints, sealants and gaskets, method of anchorage, number of anchors, supports, reinforcement, trim, flashings, and accessories.
1. Show actual field measurements on shop drawings.
2. Differentiate between shop and field fabrication.
3. Indicate substrates and adjacent work with which the fabrications must be coordinated.
4. Include large-scale details of anchorages and connecting elements.
5. Include large-scale or schematic exploded or isometric diagrams to fully explain flashing at a scale of not less than 1-1/2 inches per 12 inches (1:10)

B. Refer to Section 05580 for further details

3.1 Examination:

A. Examine openings, substrates, structural support, anchorage, and conditions, with Installer present, for compliance with requirements for installation tolerances and other conditions affecting performance of work. Verify rough opening dimensions, levelness of sill plate and operational clearances. Examine wall flashings, vapor retarders, water and weather barriers, and other built-in components to ensure a coordinated, weather tight framed aluminum storefront system installation.
1. Masonry Surfaces: Visibly dry and free of excess mortar, sand, and other construction debris.
2. Wood Frame Walls: Dry, clean, sound, well nailed, free of voids, and without offsets at joints. Ensure that nail heads are driven flush with surfaces in opening and within 3 inches of opening.
3. Metal Surfaces: Dry; clean; free of grease, oil, dirt, rust, corrosion, and welding slag; without sharp edges or offsets at joints.
4. Proceed with installation only after unsatisfactory conditions have been corrected.

3.2 Installation:

A. Comply with Drawings, Shop Drawings, and manufacturer's written instructions for installing aluminum framed storefront system, aluminum swing storefront entrance doors, accessories, and other components.

B. Install aluminum framed storefront system and storefront doors level, plumb, square, true to line, without distortion or impeding thermal movement, anchored securely in place to structural support, and in proper relation to wall flashing and other adjacent construction.

C. Set sill members and door threshold in bed of sealant or with gaskets, as indicated, for weather tight construction.

D. Install aluminum framed storefront system and components to drain condensation, water penetrating joints, and moisture migrating within sliding door to the exterior. Refer to section 07900 - Joint Sealers.

E. Separate aluminum and other corrodible surfaces from sources of corrosion or electrolytic action at points of contact with other materials.

F. Install aluminum storefront framing system glass and glazing, in accordance with section 08800 and the manufacturer's requirements.

3.3 Adjusting, Cleaning, and Protection:

A. Clean aluminum surfaces immediately after installing aluminum framed storefronts. Avoid damaging protective coatings and finishes. Remove excess sealants, glazing materials, dirt, and other substances.

B. Clean glass immediately after installation. Comply with glass manufacturer's written recommendations for final cleaning and maintenance. Remove nonpermanent labels, and clean surfaces.

C. Remove and replace glass that has been broken, chipped, cracked, abraded, or damaged during construction period.

© COPYRIGHT WILKUS ARCHITECTS

CONSULTANT

WILKUS ARCHITECTS

CLIENT

Alliance DEVELOPMENT

FRED JACQUES
ALLIANCE DEVELOPMENT
230 OHIO ST, SUITE 200
OSHKOSH, WI 54902
(612) 313-0126

PROJECT INFORMATION

SOUTH LA CROSSE SHELL
MORMON COULEE RD & LOSEY BLVD S
LA CROSSE, WI 54601

SEAL

NOT FOR CONSTRUCTION

PROJECT NO.	2025-0394
DRAWN BY	BEH
CHECKED BY	SAS

ISSUE	DATE
PERMIT SET	01/09/2026

REVISION	DATE

TITLE:
ARCHITECTURAL SPECIFICATIONS

SHEET NUMBER:
G013

SECTION 085619 - PASS-THRU WINDOW

1.1 General: Provide door hardware as shown and specified.

A. Standards: Materials and installation shall conform to the following:
1. ASTM A240 - Heat-Resisting Chromium and Chromium-Nickel Stainless Steel Plate, Sheet, and Strip for Pressure Vessels.
2. ASTM A653 - Steel Sheet, Zinc-Coated (Galvanized) or Zinc-Iron Alloy-Coated (Galvannealed) by the Hot-Dip Process.
3. ASTM B209 - Aluminum and Aluminum-Alloy Sheet and Plate.
4. ASTM B221 - Aluminum and Aluminum-Alloy Extruded Bars, Rods, Wire, Profiles, and Tubes.
5. ASTM B580 - Standard Specification for Anodic Oxide Coatings on Aluminum.
6. ASTM B680 - Standard Test Method for Seal Quality of Anodic Coatings on Aluminum by Acid Dissolution.
7. ASTM C1048 - Heat-Treated Flat Glass--Kind HS, Kind FT Coated and Uncoated Glass.
8. ASTM C1172 - Standard Specification for Laminated Architectural Flat Glass.
9. ASTM E774 - Standard Specification for Sealed Insulating Glass Units.
10. Aluminum Association AA DAF-45 - Designation System for Aluminum Finishes.

B. Quality Assurance:
1. Manufacturer Qualifications: Minimum of 25 years successful experience continuously manufacturing pass-thru windows.
2. Installer Qualifications: Installer shall have five years experience manufacturing and fabricating windows of similar type and scope as those specified in this section.

2.1 Materials:

A. Acceptable Manufacturers. Arch PM to verify required manufacturer per Tenant's assignment.
1. Quikserv; Toll Free: 1.800.388.8307; Email: sales@quikserv.com; Web: https://www.quikserv.com/
2. ReadyAccess; Toll Free: 1.800.621.5045; Email: ready@ready-access.com; Web: https://www.ready-access.com

B. No substitutions allowed. Requirements for manufacturer, design, grade, function, finish, size and other distinctive qualities of each type of door hardware are indicated on the drawings.

2.2 In-Line Side Sliding Automatic Window and Air Curtain

A. Standard Custom Side Sliding Windows – Arch PM to verify manufacturer with Tenant.
a. GC to use specification called out on storefront details sheet and/or as directed by Tenant Arch PM.

• Quikserv Custom Automatic Side Sliding Window (Model: SST-4035E-CHIPOTLE): 45 -1/2"W x 41-3/4"H window with 17-3/4" tall transom and (2) sidelights at 29 1/4"W x 41-3/4"H; Complete Unit Size 104"W x 59-1/2"H

1. Service Opening: 19"W x 29-3/4"H
2. Finish: Dark Bronze Anodized
3. Glass: 1" Clear Tempered unit + Low E (Solarban 60e) for fixed and moving panel, sidelights and transom
4. 'CHIPOTLE' package includes pre-wired air curtain with relay to sync operation with window.
a. Arch PM to verify if heated or ambient air curtain is required per Tenant assignment. Air Curtain mounts to transom.
i. Heated Air Curtain: Model: QSV1025EJ-040-BK
ii. Ambient Air Curtain: Model: QSK1025AA-BK
5. Refer to interior elevations (A700s) for direction of opening for ordering.

• ReadyAccess Automatic Side Sliding Window: 47 -1/2"W x 43-1/2"H window with 16" tall transom and (2) sidelights at 28 1/4"W x 59-1/2"H; Complete Unit Size 104"W x 59-1/2"H

1. Service Opening: 19"W x 35"H
2. Finish: Dark Bronze Anodized
3. Glass: 3/4" Clear Tempered unit + Low E (Solarban 70XL) for fixed & moving panel, sidelights and transom
4. Arch PM to verify if heated or ambient air curtain is required per Tenant assignment.
a. Heated Air Curtain: Model: RAC-E-22
b. Ambient Air Curtain: Model: RAC-22
5. Refer to exterior elevations (A300s) for direction of opening for ordering.

B. Alternate California Code Option

1. ReadyAccess: Window 47-1/2" W x 35-3/4"H with double-split transom for air curtain and 10" and (2) sidelights at 28-1/4" W x 59-1/2"H; Complete Unit Size 104"W x 59-1/2"H
a. Service Opening:15-1/4"W x 28"H, limited to meet CA code.
b. Ambient Air Curtain, AA100, and relay switch kit included with the West Coast Window package.

2. Quikserv Model: SS-4035-E-CHIPOTLE-CALI, same as above except as noted.
a. Service Opening: 28"W x 15-3/8"H, limited to meet CA code.
b. 'CHIPOTLE' package includes pre-wired ambient air curtain with relay to sync operation with window Model: QSK1025AA-BK. Air curtain mounts to transom.

C. Alternate Impact-Resistant and Florida Product Approved Option, Miami Dade Horizontal Bi-Parting Impact Slider

1. Quikserv Model: BP-7241E-IP-CHIPOTLE, Complete Unit Size: 72"W x 41"H.
a. Service Opening: 29-1/2"W x 27"H
b. Rough Opening: 72-1/2"W x 41-1/2"H
c. Glass: Impact Resistant Glass
d. 'CHIPOTLE' package includes ambient air curtain
i. Ambient Air Curtain: Model: QSK1025AA-BK, Part Number: 9345.
ii. Do not mount directly to window, mount on wall above.
e. Miami-Dade NOA #18-0814.02

2.3 Electrical Requirements

A. Quikserv Electrical Windows: 120V / 60 Hz, 20-amp branch circuit, single phase. Power supplied through base of window. Conforms to UL Standard 325 – Certified to CAN/CSA C22.2 NO. 247. Confirm with Electrical Drawings.

1. Heated Air Curtain for Custom Side Sliding Window (Model: SS-4035-E-CHIPOTLE)
a. Separate 208V circuit and Power Supply required for heated air curtain. Air curtain pre-wired through window frame with power supply routed to base of window. Confirm with Electrical Drawings.
2. Ambient Air Curtain for Custom Side Sliding Window (Model: SS-4035-E-CHIPOTLE) and Alternate California Code Option: Model: SS-4035-E-CHIPOTLE-CALI
a. Separate circuit not required. Window pre-wired to power and sync operation with air curtain.
3. Ambient Air Curtain for Alternate Impact-Resistant and Florida Product Approved Option (Model: BP-7241E-IP-CHIPOTLE):
a. Connect to main control board on window to power and synchronize operation with opening and closing of window.

B. ReadyAccess Electrical Windows: 115V / 60 Hz, 15-amp dedicated circuit required. Run power to header on fixed panel side.

1. AA300 Heated Air Curtain
a. Separate 208V /60 hz /40-amp single phase circuit required.
2. AA100 Ambient Air Curtain (Standard and CA window)
a. Separate 120V / 60hz / 15-amp single phase circuit required. Run power to center of window above header.

3.1 Installation

A. Install in accordance with manufacturer's instructions.
B. Install pass-thru windows plumb, level, square, true to line, and without warp or rack. Maintain dimensional tolerances and alignment with adjacent Work.
C. Install thermal isolation where components penetrate or disrupt building insulation. Pack fibrous insulation in shim spaces at perimeter of assembly to maintain continuity of thermal barrier.
D. Install pass-thru window components weathertight.
E. Anchor pass-thru windows securely in place to supports. Use attachment methods permitting adjustment for construction tolerances, irregularities, alignment, and expansion and contraction.
F. Separate aluminum from other metal surfaces with bituminous coatings or other means approved by Architect.
G. Coordinate installation of related sheet metal flashing as specified in Section 07 62 00 - Sheet Metal Flashing and Trim.
H. Install perimeter joint sealants as specified in Section 07 91 23 - Backer Rods.

© COPYRIGHT WILKUS ARCHITECTS

SECTION 08710 - DOOR HARDWARE

1.1 General: Provide door hardware as shown and specified.

A. Standards: Materials and installation shall conform to the following:
1. ANSI A117.1-2009 Accessible and Usable Buildings and Facilities.
2. ANSI/BHMA A156 Series Builders Hardware

B. Quality Assurance:
1. Codes and standards: Provide hardware complying with local Building Code requirements and the Tenant's standards for keying and security systems.
2. Project scheduling: Performed by an Architectural Hardware Consultant (AHC).
3. Package each item of hardware and each lockset, complete with all screws, anchors, installation instructions and templates. Identify package indexing with corresponding item number of the hardware schedule.
4. After hardware schedule acceptance, provide necessary templates or physical hardware to required trades for cutting, reinforcing, or preparing their products to receive hardware. Furnish templates to metal door manufacturer's.

2.1 Materials:

A. No substitutions allowed. Requirements for manufacturer, design, grade, function, finish, size and other distinctive qualities of each type of door hardware are indicated on the drawings.

B. Review the keying system with the Tenant and provide the type required.

3.1 Installation

A. Install each hardware item in strict accordance with manufacturer's installation instructions and recommendations. Securely fasten all attached parts. Fit faces of mortised parts snug and flush. Verify operating parts move freely and smoothly without binding or sticking, without excessive clearance.

B. Set units level, plumb and true to line and location. Adjust and reinforce attachment substrate as required for proper installation and operation. Drill and countersink units that are not factory prepared for anchorage fasteners. Space fasteners and anchors in accordance with industry standards.

C. Mount hardware units at heights indicated in DHI "Recommended Locations for Builders Hardware", unless otherwise required to comply with requirements of governing codes and regulations. Conform to ANSI A117.1 and ADAGG guidelines for accessibility.
1. Top Butts: 5 inches; top of butt from head of frame.
2. Middle Butts: 3'-2", centerline from finish floor.
3. Bottom Butts: 5 inches; finish floor to bottom of butt.
4. Locks: centerline from finish floor per hardware schedule.
5. Knobs: 3'-2", centerline from finish floor.
6. Pulls: centerline from finish floor per hardware schedule.
7. Pushes: centerline from finish floor per hardware schedule.

SECTION 08800 - GLAZING

1.1 General: Provide glass and glazing as shown and specified.

A. Standards: Materials and installation shall conform to the following:
1. CPSC 16 CFR Part 1201 (1-91)"Safety Standard for Architectural Glazing Materials."
2. GANA "Glazing Manual - 1990."

B. Quality Assurance:
1. Codes and standards: Provide type of glass and glazing products that comply with ANSI Z97.1 and testing requirements of 16 CFR Part 1201 for category II materials. Comply with all applicable codes, standards and regulations that control safety glazing materials and installation.
2. System Performance: Provide glass and glazing that has been produced, fabricated and installed to withstand normal thermal movement, wind loading and, where applicable, impact loading, without failure including loss or breakage of glass, failure of glazing sealants or gaskets to remain watertight and airtight, deterioration of glass and glazing materials and other defects in the work.
3. Installation: Performed only by experienced glaziers.

C. Warranty:
1. Insulating glass: Five years from date of installation against defects that materially obstruct vision through the glass or affect thermal and physical integrity.

2.1 Materials:

A. Glass:
1. Float Glass (FG): 1/4" thick clear float glass.
2. Tempered Glass (TG): 1/4" and 1/2" thick clear, tempered safety glass, free-of-tong marks.
3. Insulating Glass (IGL): 1" thick clear, low-e tempered sealed glass; 1/4" thick interior and exterior glass lites with 1/2" aluminum desiccated dual sealed air space; with the following characteristics:
a. Low-emissivity coating on #2 surface.
b. Visible Light Transmittance: 64% - 70%
c. Visible Light Reflectance - Outdoors: 9%-11%
d. Solar Energy Transmittance: 32%-34%
e. Solar Energy Reflactance-Outdoors: 30%-34%
f. U-Value - Winter Night: 0.29
g. U-value - Summer days: 0.28
h. Solar Heat gain Coefficient: 0.25-0.39
i. Shading Coefficient: 0.43-0.45
j. Manufacturers/Products:
i. AGC/Comfort Ti-AC40, or similar to meet code
ii. Sun Guard/SN-68, or similar to meet code
iii. PPG/Solarban 60, or similar to meet code
iv. Viracon/VE1-2M, or similar to meet code
4. Spandrel Glass (SG) 1/4" thick, Spandrel Ceramic Glass, (Color: GrayBlack or as noted on drawings) to be used in an IGL system on Surface 4, U.N.O. by Old Castle Building Envelope (419) 666-2000, Contact: Doug Dewar.
5. Frosted Window Film, 3M Dusted Crystal Translucent Window Film. Apply on the interior side of glazing.

B. Glazing Materials:
1. Glazing Sealants: Provide elastomeric glazing sealants suitable for applications indicated; compatible with one another and with other materials they will contact, complying with ASTM C920.
2. Glazing Tape: Provide preformed, non-staining and non-migrating elastomeric tape, as recommended by tape and glass manufacturers for application indicated, complying with ASTM C 1281.
3. Glazing gaskets: Provide manufacturer's standard snap-on aluminum stops and neoprene, vinyl or EPDM glazing gaskets.
4. Provide setting blocks, spacers and edge blocks of material, size, and shape complying with referenced glazing standard, and compatible with surfaces contacted in installation.

C. Fabrication: Factory fabricate and size all glass.

3.1 Installation

A. Preparation:
1. Field verify measurements and conditions of installation.
2. Examine all details. Provide proper fitting to details indicated.
3. Glazing channel dimensions shown are intended to provide for necessary bite on glass, minimum edge clearance and adequate glazing materials thickness, with reasonable tolerances. Adjust as required by job conditions at time of installation.

B. Install glass and glazing in accordance with the GANA "Glazing Manual" and glass manufacturer's recommendations.
1. Install insulating glass units to comply with recommendations by Sealed Insulating Glass Manufacturers Association (SIGMA).

C. Install setting blocks of proper size at quarter points of sill rabbet. Provide spacers as required.

D. Install glazing sealants, tapes and gaskets in accordance with manufacturer's recommendations. Set glass without springing and install securely to prevent rattling or breakage.

E. Protect glass from breakage during remaining construction. Do not remove non-permanent labels until final acceptance.

DIVISION 9 -- FINISHES

SECTION 09260 - WALL SHEATHING SYSTEMS

1.1 General: Provide gypsum board systems as shown and specified.

A. Standards: Materials and installation shall conform to the following:
1. GA 214-90 "Levels of Gypsum Board Finish."
2. GA-216 "Specifications for Application and Finishing of Gypsum Board."
3. USG "SA923 Drywall/Steel Framed Systems."

2.1 Materials:

A. Manufacturer: United States Gypsum Co. (USG), (800) 874-4968, internet www.usg.com.

B. Metal framing: Comply with ASTM C 754 and ASTM C 645 for materials and sizes.
1. Partition metal framing:
a. Studs: Galvanized steel, C-shaped, sizes indicated, 20 gage "ST20"
b. Runners: Match studs, type recommended by stud manufacturer for floor and ceiling support of studs. Provide flexible ceiling runners for full height metal stud framed partitions continuous from floor to underside of structural members or deck above.

C. Ceiling and Soffit metal framing/suspension systems:
1. Small areas: Metal stud framing of appropriate size and gage for spans indicated.
2. Large areas: Furring channel "Grillage" or "Direct Suspension System" designed for concealed support of gypsum board ceilings, of proper type for use indicated.
3. Furring members: 20 gage, galvanized steel screw type, hat-shaped furring.

D. Gypsum board panels: USG "Sheetrock" complying with ASTM C1396, tapered edge face panels, 48" wide, in maximum lengths available to minimize end joint conditions, 5/8" thick.
1. General use panels: Sheetrock Regular panels.
2. Fire rated panels: Sheetrock Firecode Core panels.
3. Water-resistant: panels: Sheetrock HUMITEK panels.

E. Cement board: USG DUROCK Cement Board, 5/8" thick x manufacturer's standard width, complying with ANSI A118.9, and in maximum lengths available to minimize end-to-end butt joints.

F. Fasteners: USG Type "S" bugle head screws for metal framing, USG Type "W" bugle head screws for wood framing, manufacturer's recommended length for panel thickness indicated.

G. Trim: Galvanized steel with knurled and perforated flanges. USG Dur-A-Bead corner bead, No. 200B casing bead metal trim, No. 093 Control Joint.

H. Joint treatment: USG Joint Treatment System, utilizing "Sheetrock Brand Joint Tape", and "Sheetrock Brand Setting-Type (DURABOND)" compound for tape bedding and topping.

I. Adhesives: USG "Sheetrock Brand Setting-Type (DURABOND) 210 or 90" compound for tape bedding and topping.

J. Acoustical sealant: USG Sheetrock Acoustical Sealant, water-base type, gunnable sealant for sealing sound-rated gypsum board systems.

K. Sound attenuation insulation: USG Thermafiber unfaced 3-1/2" thick, mineral fiber insulating batts/blankets; standard lengths and widths required to coordinate with spaces insulated.

3.1 Installation

A. Install metal wall and partition framing and ceiling suspension/ support systems in accordance with USG Bulletin SA 923 and complying with ASTM C754.
1. Ceiling suspension/ support systems: Metal furring system/direct suspension or steel stud framing system.
2. Wall and partition framing:
a. Install steel studs per schedule or at spacing indicated with bottom and top runner tracks anchored to substrates. Provide flexible ceiling runner tracks at full height partitions.
b. Terminate partition stud system 4" above ceilings, except where indicated to be extended to structural support or roof deck above. Brace tops of partition framing to structure or roof deck at maximum 4'-0" on center spacing.
c. Frame openings more than 2'-0" wide with two 20 gage studs at each jamb.
d. Coordinate the installation of supplementary blocking and nailers, provided under Section 06100 work, to support shelving, millwork, toilet accessories, and similar work that cannot be adequately supported by gypsum board alone.

B. Application and Finishing: Install and finish gypsum board to comply with ASTM C 840 and Gypsum Association GA 216 "Recommended Specifications for the Application and Finishing of Gypsum Board."
1. Screw fasten all gypsum board panels.
2. Metal Trim: Install metal corner beads at external corners of gypsum board work and metal trim wherever edge of gypsum board would be exposed. Use longest practical lengths.
3. Control Joints: Locate and install control joints in accordance with USG Bulletin SA923 "Good Design Practice" recommendations.

C. Acoustical Treatment:
1. Where sound-attenuation insulation is indicated, seal gypsum board construction at perimeters, control joints, junction boxes, openings and penetrations with a continuous bead of acoustical sealant including a bead at both faces of partitions.
2. Install sound attenuation insulation at scheduled partitions and ceilings. Install insulation in single layer of required thickness. Extend full thickness over entire area to be insulated. Cut and fit tight around obstructions. Fill all voids.
3. At openings and cutouts, fill open spaces between edges of gypsum board and fixtures, cabinets, ducts, and other flush or penetrating items, with continuous bead of acoustical sealant.
4. Seal sides and backs of electrical boxes to completely close up openings and joints with a bead of acoustical treatment.

D. Finishing:
1. Comply with manufacturer's instructions for mixing, handling, and application of materials. Apply treatment at joints both directions, at flanges of trim accessories, penetrations of gypsum board (electrical boxes, piping, and similar work), fastener heads, surface defects, and elsewhere as indicated. Apply in manner that will result in each of these items being concealed when applied decoration has been completed.
2. Apply joint tape at joints between gypsum boards, except where trim accessories are indicated.
3. Interior Exposed Gypsum Board Finish: Level 4 Finish.
a. Locations: Typical for all walls and ceilings, unless otherwise indicated
b. Finish interior gypsum board by applying the following joint compounds in four coats (not including prefill of openings in base), and sand between coats and after last coat:
c. Embedding and First Coat: Setting-type joint or taping compound.
d. Fill (Second) Coat: Setting-type topping compound.
e. Fill (Third) Coat: Setting-type topping compound.
f. Finish (Fourth) Coat: Skim coat entire surface.

4. Interior Concealed Gypsum Board: Level 3 Partial Finishing.
a. Finish concealed gypsum board construction that requires finishing same as exposed gypsum board construction, except the third coat and sanding can be omitted.

SECTION 09900 - PAINTS AND COATINGS

1.1 General: Provide paints and coatings as shown and specified.

A. Provide surface preparation, prime, intermediate and finish coatings for interior and exterior and existing scheduled surfaces and items.

B. Provide Tenant-selected finishes and colors for all exposed surfaces, unless otherwise indicated.

1.2 Related Documents:

A. Drawings and general provisions of the Contract, including General and Supplementary Conditions and Division 1 Specification Sections, apply to this section.

1.3 Summary:

A. This section includes surface preparation and field painting of the following:
1. Exposed exterior items and surfaces.
2. Exposed interior items and surfaces.
3. Surface preparation, priming, and finish coats specified in this Section are in addition to shop priming and surface treatment specified in other Sections.

1.4 Quality Assurance:

A. Applicator Qualifications: Engage an experienced applicator that has completed painting system applications similar in material and extent to that indicated for this Project with a record of successful in-service performance.

B. Source Limitations: Obtain block fillers, primers and undercoat materials for each coating system from the same manufacturer as the finish coats.

C. Provide lead free prime and finish coatings. All top coatings shall be mold and mildew resistant.

1.5 Delivery, Storage and Handling:

A. Deliver materials to the Project Site in manufacturer's original, unopened packages and containers bearing manufacturer's name and label, and the following information:
1. Product name or tile of material.
2. Product description (generic classification or binder type).
3. Manufacturer's stock number and date of manufacture.
4. Contents by volume, for pigment and vehicle constituents.
5. Thinning instructions.
6. Application instructions.
7. Color name and number.
8. VOC content

B. Store materials not in use in tightly covered containers in a well-ventilated area at a minimum ambient temperature of 45 degrees F (7 degrees C). Maintain containers used in storage in a clean condition, free of foreign materials and residue.
1. Protect from freezing. Keep storage area neat and orderly. Remove oily rags and waste daily. Take necessary measures to ensure that workers and work areas are protected from fire and health hazards resulting from handling, mixing and application.

1.6 Project Conditions

A. Apply water-based paints only when the temperatures of surfaces to be painted and surrounding air temperatures are between 50 and 90 degrees F (10 and 32 degrees C) unless otherwise stated on the technical data bulletin.

B. Apply solvent-thinned paints only when the temperature of surfaces to be painted and surrounding air temperatures are between 45 and 95 degrees F (7.2 and 35 degrees C).

C. Do not apply paint in snow, rain, fog, or mist, or when the relative humidity exceeds 85 percent, or at temperatures less than 5 degrees F (3 degrees C) above the dew point, or to damp or wet surfaces.
1. Painting may continue during inclement weather if surfaces and areas to be painted are enclosed and heated within temperature limits specified by manufacturer during application and drying periods.

2.1 Manufacturers:

A. Products: Subject to compliance with requirements, provide one of the products in the paint schedules.

B. Manufacturers Names: The following manufacturer is referred to in the paint schedule by use of shortened versions of the name, which is shown below:
1. PPG Industries, Inc.
2. Materials - No substitutions allowed.

2.2 Paint Materials, General

A. Material Compatibility: Provide block fillers, primers, undercoats, and finish-coat materials that are compatible with one another and the substrates indicated under conditions of service and application, as demonstrated by manufacturer based on testing and field experience.

B. Material Quality: Provide manufacturer's best-quality "professional" paint material of the various coating types specified. Paint-material containers not displaying manufacturer's product identification will not be acceptable.

Colors: Color guided selected by owner and will be strictly adhered too, unless otherwise noted.

C. Exterior Coatings:

Exterior Ferrous Metals:

Preparation: Remove all visible oil, grease, soil, rust and all other soluble contaminates from steel surface. Uniformly roughen surface with 150-grit paper. Remove all dust before solvent cleaning by the use of stiff bristle brush.
Prime: (1) coat PPG; 90-1912 Series Pitt-Tech Plus Int/Ext DTM Acrylic Industrial Primer (90 g/L VOC): Applied at a dry film thickness of not less than 2.0 to 4.0 mils.
Finish: (2) coats PPG; 90-1610 Series Pitt-Tech Plus EP Semi-Gloss DTM Industrial Enamels (90 g/L VOC): Applied at a dry film thickness of not less than 2.0 to 4.0 mils.
Application: Conventional or HVLP (high volume low pressure)

Exterior and Interior Gas Piping:

Preparation: Remove all visible oil, grease, soil, rust and all other soluble contaminates from pipe surface. Remove all dust before solvent cleaning by the use of stiff bristle brush.
Prime: (1) coat PPG; 90-1912 Series Pitt-Tech Plus Int/Ext DTM Acrylic Industrial Primer (90 g/L VOC): Applied at a dry film thickness of not less than 2.0 to 4.0 mils.
Finish: (2) Coats PPG; 90-1610 Series Pitt-Tech Plus EP Semi-Gloss DTM Industrial Enamels (90 g/L VOC): Applied at a dry film thickness of not less than 2.0 to 4.0 mils
Application: Conventional or HVLP (high volume low pressure)

Exterior Patio Railing:

Preparation: Remove all visible oil, grease, soil, loose paint, rust and all other soluble contaminates from steel surface. Remove all dust before solvent cleaning SSPC-SP1 by the use of stiff bristle brush. SSPC-SP3 may be required as a more aggressive preparation to remove loose mill scale, loose rust, loose paint and other loose detrimental foreign matter from the surface. Performance is better with more aggressive preparation.
Prime: (1) coat PPG; 95-3300 Durathane DTM Urethane Mastic (250 g/L VOC): Applied at a dry film thickness of not less than 3.0 to 5.0 mils.
Finish: (1) coat PPG; 95-3300 Durathane DTM Urethane Mastic (250 g/L VOC): Applied at a dry film thickness of not less than 3.0 to 5.0 mils.
Application: Conventional or HVLP (high volume low pressure) be done with conventional spray or airless equipment or brush or roller.

Exterior Galvanized Metal:

Preparation: Before applying primer or other surface treatments, clean galvanized metal surface to SSPC-SP1 that could impair bond of the various coatings. Remove oil, grease and soap film before priming use of Krud Kutter Metal Clean & Etch may be required on bare or new galvanized. Surface must be clean, dry and free of contaminants, including salt deposits. Additional prep may be needed to SSPC-SP2. Schedule cleaning and painting so dust and other contaminants from the cleaning process will not fall on wet, newly painted surfaces.

Note: Some selected areas of bare concrete surfaces will require (1) coat of Perma Crete 4-503 Concrete Primer before steel installation over all concrete surfaces.

Owner Option 1:
Prime: (1) coat PPG; 6-209 SpeedHide Galvanized Metal Primer (400 g/L VOC): Applied at a dry film thickness of not less than 3.0 to 5.0 mils.
Finish: (2) coats PPG; 90-1710 Series Pitt-Tech Plus EP Semi-Gloss DTM Industrial Enamels (50 g/L VOC): Applied at a dry film thickness of not less than 2.0 to 4.0 mils.

Owner Option 2:
Prime: (1) coat PPG; Amerlock 2 Fast Dry VOC Compliant Epoxy (84 g/L VOC): Applied at a dry film thickness of not less than 4.0 to 6.0 mils.
Finish: (2) coats PPG; 95-3300 Durathane Urethane Mastic (240 g/L VOC): Applied at a dry film thickness of not less than 2.0 to 4.0 mils.

Owner Option 3 (Low VOC):
Prime: (1) coat PPG; Amerlock 2 Fast Dry VOC Compliant Epoxy (84 g/L VOC): Applied at a dry film thickness of not less than 4.0 to 6.0 mils.
Finish: (2) coats PPG; Amershield VOC Aliphatic Urethane (84 g/L VOC): Applied at a dry film thickness of not less than 5.0 to 8.0 mils.

Application: Conventional or HVLP (high volume low pressure) be done with conventional spray or airless equipment or brush or roller.

CONSULTANT

WILKUS ARCHITECTS

CLIENT

Alliance DEVELOPMENT

FRED JACQUES
ALLIANCE DEVELOPMENT
230 OHIO ST, SUITE 200
OSHKOSH, WI 54902
(612) 313-0126

PROJECT INFORMATION

SOUTH LA CROSSE SHELL
MORMON COULEE RD & LOSEY BLVD S
LA CROSSE, WI 54601

SEAL

NOT FOR CONSTRUCTION

PROJECT NO.	2025-0394
DRAWN BY	BEH
CHECKED BY	SAS

ISSUE	DATE
PERMIT SET	01/09/2026

REVISION	DATE

TITLE:
ARCHITECTURAL SPECIFICATIONS

SHEET NUMBER:
G014

Exterior CMU Primer:

CMU Preparation: Mortar should cure for at least 30 days and preferably 90 days prior to priming. Fill block with an appropriate block filler. Surfaces previously coated with water thinned cement-based paint must be prepared with extra care. If the material appears to be adhering tightly, a masonry sealer may be applied to seal the surface. Check adhesion by applying a piece of masking tape. If the sealer peels off and has loose particles, remove all chalking or crumbling material, re-seal and re-check adhesion.

Field Preparation: Surfaces to be coated must be dry, clean, sound, and free from all contamination including loose and peeling paint, dirt, grease, oil, wax, concrete curing agents and bond breakers, chalk, efflorescence, mildew, rust, product fines, and dust. Remove loose paint, chalk, and efflorescence by wire brushing, scraping, sanding, and/or pressure washing. Putty all nail holes and caulk all cracks and open seams. Sand all glossy, rough, and patched surfaces. Feather back all rough edges to sound surface by sanding.

Prime: (2) Coats PPG; Speedhide Interior/Exterior Masonry Hi Fill Latex Block Filler

Application: Brush, Roll or Spray

Exterior Stucco/EIFS Surfaces (including wet areas):

Preparation: Remove all visible oil, grease, soil and all other foreign substances with cleaning solutions and/or scrapers. Allow to dry and sand all areas that need smoothing and dust off.
Prime: (1) coat PPG; 4-603 Perma-Crete Alkali Resistant Primer (100 g/L VOC): Applied at a dry film thickness of not less than 1.2 to 1.9 mils.
Finish: (2) coats PPG; 4-22 Perma-Crete Hi-Build Acrylic (100 g/L VOC): Applied at a dry film thickness of not less than 3.2 to 5.8 mils.
Application: Airless spray with back roll using 3/4" nap roller.

Exterior Wood:

Preparation: Remove all visible oil, grease, soil and all other foreign substances with cleaning solutions and or scrapers. Allow to dry and sand all areas that need smoothing and dust off.
Prime: (1) coat PPG; 17-921 Seal Grip Primer Sealer (100 g/L VOC): Applied at a dry film thickness of not less than 2.0 to 4.0 mils.
Finish: (2) coats PPG; 749-10 Permanizer Exterior Semi-Gloss or PPG Acri-Shield Semi-Gloss PP649 (50 g/L VOC): Applied at a dry film thickness of not less than 1.5 to 3.0 mils.
Application: Brush, Roll or Spray

Exterior Traffic Safety Marking.:
Preparation: All surfaces must be clean, dry and free from oil, grease, antifreeze, loose sand, aggregate and chipping/peeling existing striping. Any curing compounds used on new concrete must be mechanically abraded off prior to striping. When striping on freshly sealed surfaces use caution as some sealers can affect the curing and adhesion of traffic paint. When in doubt, always test adhesion.

For complete drying and minimum dirt retention when striping parking lots, the lots should be closed to traffic for two hours minimum after painting. New asphalt and concrete should be allowed to cure for a minimum of 14 days to maximize adhesion and durability.
Owner Option 1:
Finish: (1) coat PPG; A-2886B Type II, White Zone Marking - Applied at a dry film thickness of not less than 8.6 mils.

Owner Option 2:
Finish: (1) coat PPG; A-2886B Type II, Yellow Zone Marking - Applied at a dry film thickness of not less than 8.6 mils

Application: Applying a test strip to determine dry to no- pickup time when the humidity is higher than 65%. Cone whenever necessary.
• Do not heat paint in striping system above 60 C.
• Do not apply when temperatures are below 3 C.
• Do not apply when rain is forecast.
• Do not apply when temperatures are near or below the dew point or rain is forecast within 1 hour.
• Do not thin more than 5% with acetone and then use immediately.
• Do not apply if temperature is expected to fall below freezing for 6 hours after application of paint.
Application Equipment: Apply with a high quality brush, roller, or by airless spray equipment.

Airless Spray: Pressure 2000 psi, tip 0.015" - 0.021"Spray equipment must be handled with due care and in accordance with manufacturer's recommendation. High-pressure injection of coating s into the skin by airless equipment may cause serious injury.
Brush: Polyester/Nylon Brush
Roller: All-purpose nap roller cover.

E. Color Guide: Refer to Finish Plan and drawings for exact location of all colors.

HAB	WHAT	COLOR	SHEEN
Exterior Traffic Safety Marking	PPG A-2886B Type II, Low VOC Fast Dry Solvent	PPG White Zone Marking	Satin
Exterior Traffic Safety Marking	PPG A-2886B Type II, Low VOC Fast Dry Solvent	PPG Yellow Zone Marking	Satin
Exterior Galvanized Metal, Flashing and Prefinished Metal Wall Panels	PPG Pitt-Tech Plus EP 90-1170 DTM Series	PPG 1001-7 "Black Magic"	Satin
Exterior and Interior Gas Piping, Where Exposed	PPG Pitt-Tech Plus EP 90-1610 DTM Series	Match surrounding finishes/verify with architect	Semi-Gloss
Exterior CMU Primer	PPG Speedhide Interior/Exterior Masonry Hi Fill Latex Block Filler	White	Flat
Exterior CMU	PPG Pitt-Tech Plus EP 90-1610 DTM Series	PPG 1001-6 "Knight's Armor"	Semi-Gloss
Exterior Ferrous Metals	PPG Pitt-Tech Plus EP 90-1610 DTM Series	PPG 1001-7 "Black Magic"	Semi-Gloss
Exterior Wood	PPG Permanizer 749-10 Series or PPG Acri-Shield PP649 Series	PPG 1001-7 "Black Magic"	Semi-Gloss
Exterior Stucco and EIFS	PPG Perma-Crete 4-22 Series High Build Acrylic Topcoat	PPG 1010-1 "Pegasus"	Flat
Exterior Stucco and EIFS	PPG Perma-Crete 4-22 Series High Build Acrylic Topcoat	PPG 1001-7 "Black Magic"	Flat
Patio Railing	PPG Durethane DTM Urethane 95-3300 Series	PPG 1001-7 "Black Magic"	Gloss

3.1 Installation:

A. Examination:
1. Verify that site environmental conditions are appropriate for application of coatings specified.
2. Immediately prior to coating application, ensure that surfaces to receive coatings are dry.
3. Ensure that moisture-retaining substrates to receive coatings have moisture content within tolerances allowed by coating manufacturer, using moisture measurement techniques recommended by coating manufacturer.
4. Immediately prior to coating application, examine surfaces to receive coatings for surface imperfections and for contaminants which could impair performance or appearance of coatings, including but not limited to, loose primer, rust, scale, oil, grease, mildew, algae, or fungus, stains or marks, cracks, indentations, or abrasions.
5. Correct the above conditions and any other conditions which could impair performance or appearance of coatings in accordance with specified surface preparation procedures before proceeding with coating application.

B. Preparation:
1. Do not start work until surfaces to be finished are in proper condition to produce finished surfaces of uniform, satisfactory appearance.
2. Stains and Marks: Remove completely, if possible, using materials and methods recommended by coating manufacturer; seal with shellac or other coating acceptable to paint manufacturer stains and marks that might bleed through paint finishes which cannot be completely removed.
3. Remove or protect hardware, electrical plates, mechanical grilles and louvers, lighting fixture trim, and other items not indicated to receive coatings which are adjacent to surfaces to receive coatings.
4. Remove mildew from impervious surfaces by scrubbing with solution of disodium phosphate and bleach. Rinse with clean water and allow substrate to thoroughly dry.
5. For specific substrate preparation, see individual specifications.
6. Provide necessary staging, ladders, shield, protective coverings and drop cloths. Protect floors, walls and adjacent work and materials. Remove and properly replace temporary protection and coverings removed from any part of the work or finish. Repair damage at Contractor's expense.

C. Application:
1. General: Mix, prepare and apply paint according to manufacturer's written instructions.
   a. Use applicators and techniques best suited for substrate and type of material being applied.
   b. Do not apply high-performance coatings over dirt, rust, scale, grease, moisture, scuffed surfaces, or conditions detrimental to forming a durable coating film.
   c. Coating surface treatments, and finishes are indicated in the coating system descriptions.
   d. Provide finish coats compatible with primers used.
   e. The term "exposed surfaces" includes areas visible when permanent or built-in fixtures, convector covers, grilles, covers for finned-tube radiation, and similar components are in place. Extend coatings in these areas, as required, to maintain system integrity and provide desired protection.
2. Application Procedures: Apply coatings by brush, roller, spray, or other applicators according to manufacturer's written instructions.
   a. The number of coats and film thickness required is the same regardless of application method.
   b. Completed Work: Match approved Samples for color, texture, and coverage. Remove, refinish, or recoat work that does not comply with specified requirements as directed by Tenant. Paints and coatings work is subject to acceptance by the Tenant.
   c. Keep brushes and rollers clean, free from contamination and suitable for the finish required.
   d. Unless otherwise indicated, allow exterior paints to dry for 48 hours and interior paints to dry for 24 hours between coats.
   e. Sand lightly and remove dust between coats to achieve required finish.
   f. Finished surfaces shall be uniform in finish and color and free of brush marks, sagging, holidays, corduroy and other imperfections. Coverage and hide shall be complete.
   g. Edges of paint or finish adjoining other materials or colors shall be sharp and clean without overlapping. Cut paint in neatly around glass or other edges.
   h. Paints and coatings work is subject to acceptance by the Tenant. Correct unsatisfactory work not complying with these specifications as directed by the Tenant.

D. Cleaning:
1. After completing painting, clean glass and paint spattered surfaces. Remove spattered paint by washing and scraping without scratching or damaging adjacent finished surfaces.

E. Protection:
1. Protect work of other trades, whether being painted or not, against damage from painting. Correct damage by cleaning, repairing or replacing, and repainting, as approved by Architect / Tenant.

2. Provide "Wet Paint" signs to protect newly painted finishes. After completing painting operations, remove temporary protective wrappings provided by others to protect their work.

3. After work of other trades is complete, touch up and restore damaged or defaced painted surfaces.

F. Maintenance: Furnish extra paint materials from the same production run as the materials applied in the quantities described below. Package paint materials in unopened, factory-sealed containers for storage and identify with labels describing contents. Deliver extra materials to the Tenant.
1. Provide one gallon of paint and wood stain of each type and color required for maintenance purposes. Provide original, unopened, labeled containers with color samples and a list of project use.

DIVISION 10 - SPECIALTIES

SECTION 10522 - PORTABLE FIRE EXTINGUISHES

1.1 General: Provide portable fire extinguishers as shown and specified.

A. Standards: Materials and installation shall conform to the following:
1. NFPA 10 "Standard for Portable Fire Extinguishers.

2.1 Materials:

A. Provide minimum 10 lb. capacity fire extinguishers in quantity and type complying with local code and fire regulations requirements.
1. Provide new fire extinguishers fully loaded, tested, UL and FM labeled and listed and ready for use.
2. Provide manufacturer's recommended mounting brackets and hardware.

3.1 Installation:

A. Install fire extinguishers in accordance with manufacturer's installation instructions, at heights and locations acceptable to the local fire regulations enforcement authority

SECTION 10700 - EXTRUDED ALUMINUM CANOPY

1.1 General: Provide canopies as shown and specified.

A. Standards: Materials and installation shall conform to the following:
1. AWS, D1.1 - Structural Welding Code - Steel
2. AMMA, Aluminum Finishes AAMA 2604 (FGIA 2604) - Powder Coat

B. Quality Assurance
1. Shop Drawings: To be created under the guidance of a professional engineer. Site Specific stamped drawing may be required by the manufacturer based on location. Drawings must indicate size, material and finish. Include plan, elevations and sections to clearly outline the canopy locations. Include installation procedures, details of joints, attachments and clearances.
   a. Submit within 15 days after contract award.

2.1 Manufacturers:

A. Architectural Fabrication, Inc. – Manufacturer is located at 2100 E. Richmond Avenue, Fort Worth, TX 76104. P: (800) 962-8027. E: chipotle@arch-fab.com, W: www.arch-fab.com
B. Substitutions are acceptable assuming they comply with this specification, are submitted based on Quality Assurance and Division1 - Section 01100 requirements and have minimum 10 years experience, and only when approved by Arch PM and Chipotle DM.
1. Awnex, Contact: Katie Dicks, P: 770-704-7140 x151, E: katie@awnexinc.com
2. Uni-Structures, Contact: Dana Fredericks, P: 678-974-1773
3. API, Contact: Jade Moore-Esposito, P: 813-925-0144, E: jesposito@americanproducts.com

2.2 Materials:

A. Specifications are based on Architectural Fabrication, Inc. - Helios Canopy Patent #9,976,310
1. Framing: Gutter fascia, tube, angles: 6063-T6 alloy extruded aluminum. Gutter to be notched in the back to allow steel support arms to pass through.
2. Decking: Extruded aluminum 8" wide deck pan in 6063-T6 or 6063-T5 alloy (Roll form is not acceptable)
3. Steel Support Arms: 3" x 3" x .250" Steel tube support arms w/ 8" w x 5"h x 1/2" thick steel plate welded to the back. Must manufacture steel arm in manner to leave room for LED enclosure at back of canopy.
4. Hardware and Fasteners: Nuts, bolts, washers, clevis pins, screws, anchors and pipe spacers to be zinc plated or galvanized steel required to suit application and per pre-engineered canopy load requirements. Typical wall anchors are minimum ½" diameter. Touch up paint must be provided for each canopy to allow for potential repairs in the field.
5. Flashing: Shall be minimum 0.040-inch aluminum, fabricated to prevent leakage and sealed with Novaflex metal roof sealant in custom color match. Another equivalent sealant is acceptable.
6. LED Enclosure: Each canopy is to have a preformed aluminum LED enclosure along the back edge of the canopy finished in the same powder coat as the canopy. 1" nominal inside width, and a minimum aluminum sheet thickness of .063".
7. Scuppers: Drainage for canopy is (2) aluminum scuppers located at the front of the canopy per drawings. See finish below for details.
8. Finish: All aluminum shall be powder coat finish per FGIA 2604 (aka AAMA 2604). Steel shall be commercially blasted, then coated with a zinc rich primer, color per Elevations, and finally the top coat of super polyester powder (2604 compliant) applied.

3.1 Installation:

1. Install canopies per manufacturer's written instructions and videos, and as indicated on architectural drawings
2. Locate and place canopies level, plumb and at indicated alignment with adjacent work.
3. Use concealed anchors where possible.
4. Repair damaged finishes so no evidence remains of corrective work. Return items to the factory that cannot be refinished in the field. Make required alterations and refinish entire unit or provide new units.
5. Protect galvanized and nonferrous-metal surfaces from corrosion or galvanic action by applying a coating of bituminous paint or elastomeric coating on surfaces that will be in contact with concrete, masonry or dissimilar metals.

© COPYRIGHT WILKUS ARCHITECTS

CONSULTANT

WILKUS ARCHITECTS

CLIENT

Alliance DEVELOPMENT

FRED JACQUES
ALLIANCE DEVELOPMENT
230 OHIO ST, SUITE 200
OSHKOSH, WI 54902
(612) 313-0126

PROJECT INFORMATION

SOUTH LA CROSSE SHELL
MORMON COULEE RD & LOSEY BLVD S
LA CROSSE, WI 54601

SEAL

NOT FOR CONSTRUCTION

PROJECT NO. 2025-0394
DRAWN BY BEH
CHECKED BY SAS

ISSUE	DATE
PERMIT SET	01/09/2026

REVISION	DATE

TITLE:
ARCHITECTURAL SPECIFICATIONS

SHEET NUMBER:
G015

SITE CONSTRUCTION PLANS

FOR

CHIPOTLE RESTAURANT

LA CROSSE, WI

SITE LOCATION MAP

AERIAL MAP

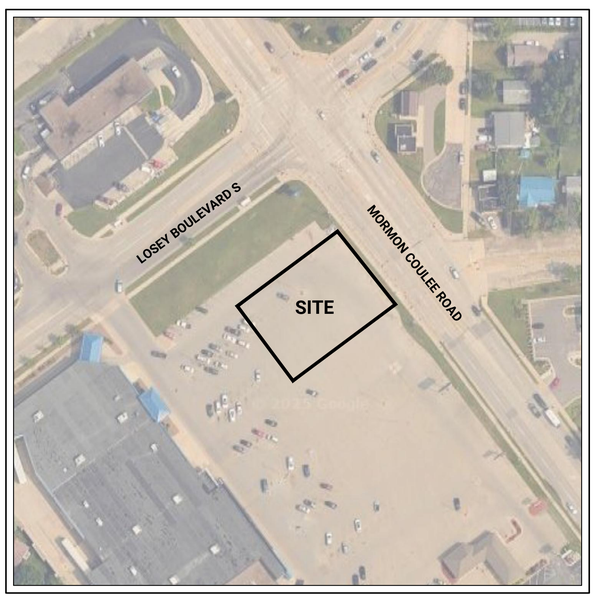

SHEET INDEX

C0.0	TITLE SHEET
	ALTA/NSPS LAND TITLE SURVEY
C1.1	EXISTING CONDITIONS & REMOVALS PLAN
C2.1	SITE PLAN
C3.1	UTILITY PLAN
C4.1	GRADING AND DRAINAGE PLAN
C5.1	EROSION CONTROL PLAN, PHASE I
C5.2	EROSION CONTROL PLAN, PHASE II
C5.3	SWPPP NARRATIVE
C6.1	DETAILS
C6.2	DETAILS
C6.3	DETAILS
C6.4	DETAILS
L1.1	LANDSCAPE PLAN

CONTOUR CIVIL DESIGN
P.O. BOX 89, ROCKFORD, MINNESOTA 55373
TEL: 612.730.2265 | WWW.CONTOURCD.COM

I HEREBY CERTIFY THAT THIS PLAN, SPECIFICATION OR REPORT WAS PREPARED BY ME OR UNDER MY DIRECT SUPERVISION AND THAT I AM A DULY LICENSED PROFESSIONAL ENGINEER UNDER THE LAWS OF THE STATE OF WISCONSIN

NAME: JOSEPH T RADACH PE

SIGNATURE:

DATE: 01/09/26 LIC #: E-43913

REVISIONS | ISSUE DATE: 01/09/26 | BY: JTR

1.
2.
3.
4.
5.
6.
7.

OWNER

ALLIANCE DEVELOPMENT
230 Ohio Street, Suite 200
Oshkosh, WI 54902

TITLE SHEET

CHIPOTLE RESTAURANT
Mormon Coulee Road & Losey Blvd S
La Crosse, WI 54601

SHEET NUMBER
C0.0

01/09/26 c:\users\contour civil\dropbox\pc\desktop\contour_jobs\25019 - chipotle la crosse\acad\25019_cover.dwg

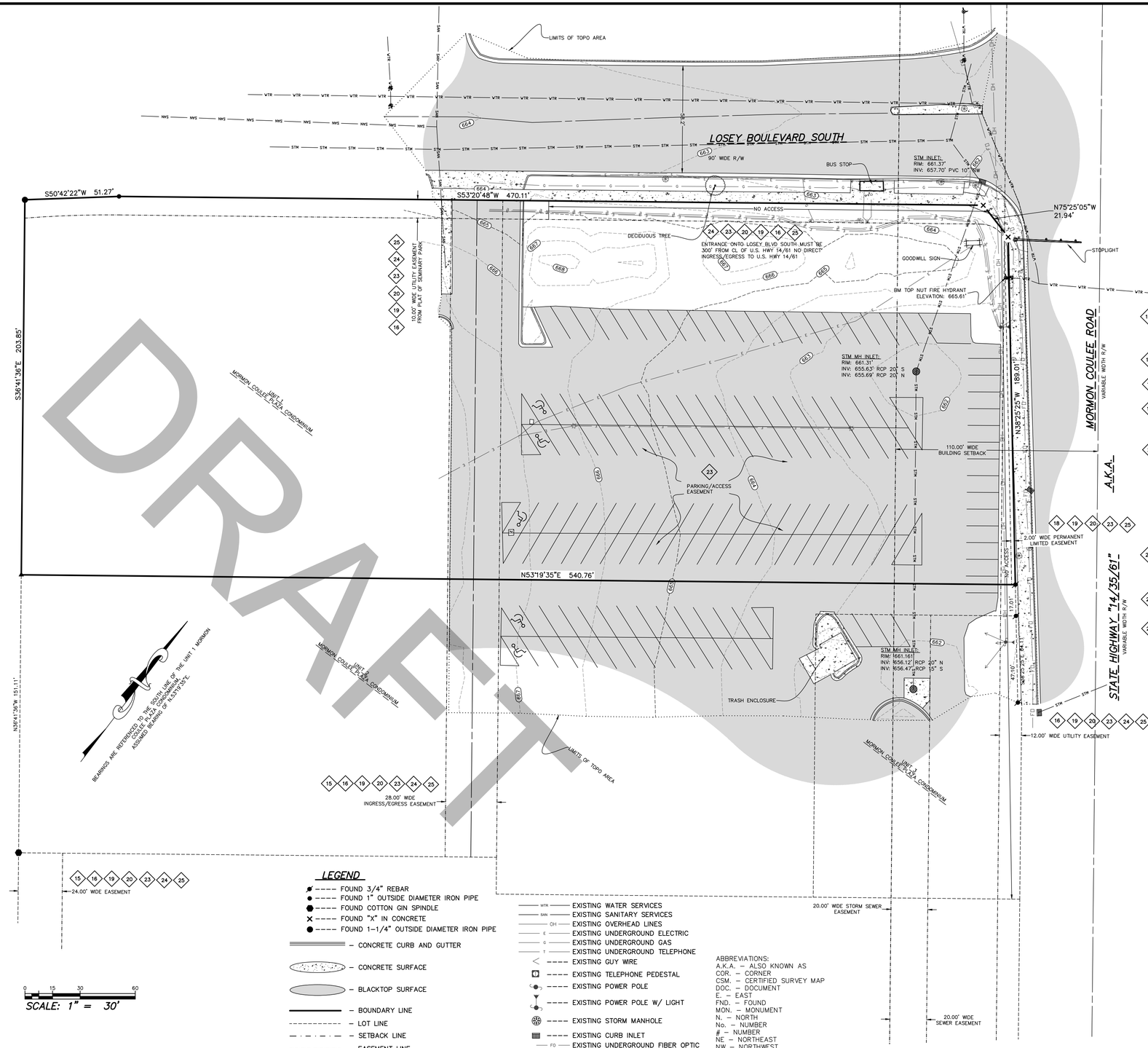

SURVEYOR'S CERTIFICATE:

TO GOODWILL INDUSTRIES OF NORTH CENTRAL WISCONSIN, INC., A WISCONSIN CORPORATION; AND RIVER VALLEY ONE, LLC.,; AND CHICAGO TITLE INSURANCE COMPANY; AND RESPECTIVE SUCCESSORS AND ASSIGNS:

THIS IS TO CERTIFY THAT THIS MAP OR PLAT AND THE SURVEY ON WHICH IT IS BASED WERE MADE IN ACCORDANCE WITH THE 2021 MINIMUM STANDARD DETAIL REQUIREMENTS FOR ALTA/NSPS LAND TITLE SURVEYS, JOINTLY ESTABLISHED AND ADOPTED BY ALTA AND NSPS, AND INCLUDES ITEMS 1, 2, 3, 4, 5, 6(B), 7(A), 8, 9 AND 11(A) OF TABLE A THEREOF. THE FIELDWORK WAS COMPLETED ON NOVEMBER 11TH 2025.

DATE OF PLAT OR MAP THIS _____, DAY OF _____, 2025

_____

PETER J. GARTMANN, P.L.S. 2279

LEGAL DESCRIPTION: (FROM TITLE COMMITMENT NO.: CO–16794 DATED 10/14/2025)

UNIT 1, TOGETHER WITH SAID UNIT'S UNDIVIDED INTEREST IN THE COMMON ELEMENTS (AND THE EXCLUSIVE USE OF THE LIMITED COMMON ELEMENTS APPURTENANT TO SAID UNIT) ALL IN MORMON COULEE PLAZA CONDOMINIUM, A CONDOMINIUM DECLARED AND EXISTING UNDER AND BY VIRTUE OF THE CONDOMINIUM OWNERSHIP ACT OF THE STATE OF WISCONSIN AND RECORDED BY A DECLARATION AS SUCH CONDOMINIUM IN THE OFFICE OF THE REGISTER OF DEEDS FOR LACROSSE COUNTY, WISCONSIN ON MARCH 27, 2012, AS DOCUMENT NO. 1593560, AND TOGETHER WITH ANY AND ALL AMENDMENTS THERETO, SAID CONDOMINIUM BEING LOCATED IN THE CITY OF LA CROSSE, COUNTY OF LA CROSSE EWAUKEE, STATE OF WISCONSIN ON THE REAL ESTATE DESCRIBED IN SAID DECLARATION AND INCORPORATED HEREIN BY THIS REFERENCE THERETO

SCHEDULE B2 ITEMS (SURVEY RELATED):

11. EASEMENT RECORDED AUGUST 12, 1976 AS DOCUMENT NO. 860334 *–NO AFFECT TO SUBJECT PROPERTY*

12. EASEMENTS DEED RECORDED OCTOBER 17, 1978 AS DOCUMENT NO. 889231 *–NO AFFECT TO SUBJECT PROPERTY*

13. RECITALS AS SHOWN ON THE PLAT OF SEMINARY PARK RECORDED ON OCTOBER 6, 1978 AS DOCUMENT NO. 889685
REFERENCE IS HEREBY MADE TO SAID DOCUMENT FOR FULL PARTICULARS

14. AGREEMENT FOR UTILITY AND DRIVEWAY EASEMENT RECORDED SEPTEMBER 7, 1979 AS DOCUMENT NO. 900253 *–NO AFFECT TO SUBJECT PROPERTY*

15. COVENANTS, CONDITIONS, RESTRICTIONS AND EASEMENTS BUT OMITTING ANY COVENANTS OR RESTRICTIONS, IF ANY, INCLUDING BUT NOT LIMITED TO THOSE BASED UPON RACE, COLOR, RELIGION, SEX, SEXUAL ORIENTATION, FAMILIAL STATUS, MARITAL STATUS, DISABILITY, HANDICAP, NATIONAL ORIGIN, ANCESTRY, SOURCE OF INCOME, GENDER, GENDER IDENTITY, GENDER EXPRESSION, MEDICAL CONDITION OR GENETIC INFORMATION, AS SET FORTH IN APPLICABLE STATE OR FEDERAL LAWS, EXCEPT TO THE EXTENT THAT SAID COVENANT OR RESTRICTION IS PERMITTED BY APPLICABLE LAW, AS SET FORTH IN THE WARRANTY DEED RECORDED ON SEPTEMBER 7, 1979, AS DOCUMENT NO. 900255. *–PLOTTED AS SHOWN ON MAP*

16. EASEMENT(S) FOR THE PURPOSE(S) AND RIGHTS INCIDENTAL THERETO AS RESERVED IN A WARRANTY DEED RECORDED ON DECEMBER 31, 1980, AS DOCUMENT NO. 914166 *–PLOTTED AS SHOWN ON MAP* –NOT ALL EASEMENTS ARE ON SITE SOME EASEMENTS NOT SHOWN

18. EASEMENT(S) FOR THE PURPOSE(S) AND RIGHTS INCIDENTAL THERETO AS RESERVED IN AN AWARD OF DAMAGES RECORDED ON JULY 18, 1991, AS DOCUMENT NO. 1054063. *–PLOTTED AS SHOWN ON MAP*

19. COVENANTS, CONDITIONS, RESTRICTIONS AND EASEMENTS BUT OMITTING ANY COVENANTS OR RESTRICTIONS, IF ANY, INCLUDING BUT NOT LIMITED TO THOSE BASED UPON RACE, COLOR, RELIGION, SEX, SEXUAL ORIENTATION, FAMILIAL STATUS, MARITAL STATUS, DISABILITY, HANDICAP, NATIONAL ORIGIN, ANCESTRY, SOURCE OF INCOME, GENDER, GENDER IDENTITY, GENDER EXPRESSION, MEDICAL CONDITION OR GENETIC INFORMATION, AS SET FORTH IN APPLICABLE STATE OR FEDERAL LAWS, EXCEPT TO THE EXTENT THAT SAID COVENANT OR RESTRICTION IS PERMITTED BY APPLICABLE LAW, AS SET FORTH IN THE SPECIAL WARRANTY DEED RECORDED ON MAY 26, 1994, AS DOCUMENT NO. 1116965. *–PLOTTED AS SHOWN ON MAP*

20. LIABILITY FOR ASSESSMENTS, EXPENSES, CHARGES, FINES, PENALTIES, COSTS AND LEVIES ASSERTED UNDER THE UNIT OWNERSHIP ACT OF THE STATE OF WISCONSIN AND DECLARATION OF CONDOMINIUM AND BY–LAWS ADOPTED PURSUANT THERETO OR ANY AMENDMENTS THERETO. *–PLOTTED AS SHOWN ON MAP*

RESERVATIONS, CONDITIONS, EASEMENTS, COVENANTS, USES, OPTIONS, AGREEMENTS, LIMITATIONS ON TITLE AND ALL OTHER PROVISIONS CONTAINED IN OR INCORPORATED BY REFERENCE TO THAT CERTAIN DECLARATION OF CONDOMINIUM OF MORMON COULEE PLAZA AND EXHIBITS THERETO, RECORDED 03/27/2012 IN THE OFFICE OF THE REGISTER OF DEEDS FOR LA CROSSE COUNTY, WISCONSIN AS DOCUMENT NUMBER 1593560, AND BY–LAWS OF THE CONDOMINIUM HOMEOWNERS ASSOCIATION.

PROVISIONS AND LIMITATIONS OF THE UNIT OWNERSHIP ACT OF THE STATE OF WISCONSIN.

FIRST AMENDMENT TO DECLARATION OF CONDOMINIUM FOR MORMON COULEE PLAZA CONDOMINIUM AND UNANIMOUS CONSENT OF MEMBERS RECORDER SEPTEMBER 4, 2024 AS DOCUMENT NO. 1824277.

21. PROVISIONS FOR FUTURE ASSESSMENTS AS PROVIDED FOR IN THE DECLARATION OF CONDOMINIUM *–NOT PLOTTABLE*

23. DECLARATION OF RECIPROCAL EASEMENT AGREEMENT RECORDED MARCH 27, 2012 AS DOCUMENT NO. 1593561. AMENDED DECLARATION OF RECIPROCAL EASEMENT AGREEMENT RECORDED APRIL 23, 2013 AS DOCUMENT NO. 1620054. *–PLOTTED AS SHOWN ON MAP*

FIRST AMENDMENT TO AMENDED DECLARATION OF RECIPROCAL EASEMENT AGREEMENT RECORDED OCTOBER 15, 2019 AS DOCUMENT NO. 1734366.

SECOND AMENDMENT TO AMENDED DECLARATION OF RECIPROCAL EASEMENT AGREEMENT RECORDED SEPTEMBER 10, 2024 AS DOCUMENT NO. 1824520.

24. PLAT OF MORMON COULEE PLAZA CONDOMINIUM RECORDED MARCH 27, 2012 AS DOCUMENT NO. 1593562. AMENDED PLAT OF MORMON COULEE PLAZA CONDOMINIUM RECORDED SEPTEMBER 4, 2024 AS DOCUMENT NO. 1824278. *–PLOTTED AS SHOWN ON MAP*

25. COVENANTS, CONDITIONS, RESTRICTIONS AND EASEMENTS BUT OMITTING ANY COVENANTS OR RESTRICTIONS, IF ANY, INCLUDING BUT NOT LIMITED TO THOSE BASED UPON RACE, COLOR, RELIGION, SEX, SEXUAL ORIENTATION, FAMILIAL STATUS, MARITAL STATUS, DISABILITY, HANDICAP, NATIONAL ORIGIN, ANCESTRY, SOURCE OF INCOME, GENDER, GENDER IDENTITY, GENDER EXPRESSION, MEDICAL CONDITION OR GENETIC INFORMATION, AS SET FORTH IN APPLICABLE STATE OR FEDERAL LAWS, EXCEPT TO THE EXTENT THAT SAID COVENANT OR RESTRICTION IS PERMITTED BY APPLICABLE LAW, AS SET FORTH IN THE WARRANTY DEED RECORDED ON APRIL 11, 2012, AS DOCUMENT NO. 1594550. *–PLOTTED AS SHOWN ON MAP*

26. DECLARATION OF CONDITIONS, COVENANTS AND RESTRICTIONS FOR MAINTENANCE OF STORMWATER MANAGEMENT MEASURES RECORDED SEPTEMBER 9, 2024 AS DOCUMENT NO. 1824466. *–BLANKET EASEMENT*

27. DECLARATION OF CONDITIONS, COVENANTS AND RESTRICTIONS FOR MAINTENANCE OF STORMWATER MANAGEMENT MEASURES RECORDED SEPTEMBER 9, 2024 AS DOCUMENT NO. 1824526. *–BLANKET EASEMENT*

NOTES (ALTA/NSPS TABLE A ITEMS):

- MONUMENTS AT CORNER LOCATIONS AS SHOWN ON THE MAP
- ADDRESS 3954 MORMON COULEE ROAD PER TITLE COMMITMENT No. CO–16794
- SUBJECT PROPERTY LOCATED IN ZONE X PER FIRMette 55063C0263D
- UNIT 1 OF MORMON COULEE PLAZA CONDOMINIUM SQ.FT. AND ACREAGE AS SHOWN ON THE MAP
- SURFACE REFLECTS 1' CONTOUR INTERVALS
- NO ZONING REPORT PROVIDED
- NO BUILDINGS LOCATED IN SUBJECT AREA OF THIS ALTA
- ALL SUBSTANTIAL FEATURES AS SHOWN ON THE MAP
- THERE ARE 111 REGULAR PARKING SPACES AND 4 HANDICAP PARKING SPACES MAKING 115 TOTAL PARKING SPACES
- UTILITIES AS SHOWN FROM ABOVE GROUND OBSERVED EVIDENCE, FOUND RECORDED EVIDENCE, AND MARKINGS FROM DIGGERS TICKET NUMBERS: 20254503714, 20254503818

SURVEYOR'S NOTE:

OFFSITE EASEMENTS REFERRED TO IN DOCUMENTS NOT PLOTTED
BM SET USED FOR TOPO AREA OF PROJECT SOUTHWEST QUADRANT OF LOSEY BLVD. SOUTH AND STATE HIGHWAY 14 TOP NUT OF FIRE HYDRANT
DIRECT PUBLIC STREET ACCESS ONTO LOSEY BOULEVARD SOUTH WITH A 58.2' WIDE DRIVING SURFACE AND 320'± TO THE INTERSECTION OF MORMON COULEE ROAD

LEGEND

- FOUND 3/4" REBAR
- FOUND 1" OUTSIDE DIAMETER IRON PIPE
- FOUND COTTON GIN SPINDLE
- FOUND "X" IN CONCRETE
- FOUND 1–1/4" OUTSIDE DIAMETER IRON PIPE
- CONCRETE CURB AND GUTTER
- CONCRETE SURFACE
- BLACKTOP SURFACE
- BOUNDARY LINE
- LOT LINE
- SETBACK LINE
- EASEMENT LINE
- EXISTING LIGHT POLE
- EXISTING STORM AREA DRAIN
- HANDI CAP PARKING SPACE
- EXISTING WATER SERVICES
- EXISTING SANITARY SERVICES
- EXISTING OVERHEAD LINES
- EXISTING UNDERGROUND ELECTRIC
- EXISTING UNDERGROUND GAS
- EXISTING UNDERGROUND TELEPHONE
- EXISTING GUY WIRE
- EXISTING TELEPHONE PEDESTAL
- EXISTING POWER POLE
- EXISTING POWER POLE W/ LIGHT
- EXISTING STORM MANHOLE
- EXISTING CURB INLET
- EXISTING UNDERGROUND FIBER OPTIC
- EXISTING STORMWATER SERVICES
- EXISTING TRAFFIC SIGN
- EXISTING CURB STOP
- EXISTING FIRE HYDRANT
- EXISTING GAS VALVE
- EXISTING WATER VALVE
- EXISTING UTILITY MANHOLE
- EXISTING SANITARY MANHOLE
- EXISTING GAS METER

ABBREVIATIONS:
A.K.A. – ALSO KNOWN AS
COR. – CORNER
CSM. – CERTIFIED SURVEY MAP
DOC. – DOCUMENT
E – EAST
FND. – FOUND
MON. – MONUMENT
N. – NORTH
No. – NUMBER
– NUMBER
NE – NORTHEAST
NW – NORTHWEST
O.D. – OUTSIDE DIAMETER
P.L.S. – PROFESSIONAL LAND SURVEYOR
R/W – RIGHT OF WAY
S. – SOUTH
SE – SOUTHEAST
SEC. – SECTION
SQ.FT. – SQUARE FEET
SW – SOUTHWEST
V. – VOLUME
P. – PAGE
W.– WEST

LOCATION SKETCH

NOT TO SCALE

UTILITY DISCLAIMER:

TO ALL USING THIS TOPOGRAPHIC SURVEY: THE LOCATIONS, SIZES, AND TYPES OF UNDERGROUND PUBLIC AND PRIVATE UTILITIES OR SUBSTRUCTURES SHOWN HEREON, WERE OBTAINED FROM VISUAL INSPECTION, FIELD MEASUREMENTS, AND/OR AS–BUILT PLANS. SANITARY SEWER AND STORM SEWER PIPE SIZES, INVERTS, DIRECTION, AND LOCATION BETWEEN MANHOLES ARE SUPPLEMENTED BY AS–BUILT PLANS AND/OR ESTIMATED BASED ON FIELD OBSERVATIONS. PRIOR TO CONSTRUCTION IN THE VICINITY OF ANY UTILITIES SHOWN HEREON, IT IS REQUIRED THAT THE LOCATIONS, DEPTHS, AND SIZES BE FIELD VERIFIED. THE LOCATIONS SHOWN HEREON ARE ONLY APPROXIMATE, WITH THE POSSIBILITY THAT ADDITIONAL UTILITY LINES NOT DISCOVERED, OR MARKED, DURING THE SEARCH OF RECORDS AND THE FIELD SURVEY MAY EXIST. ANY CONTRACTOR USING THE INFORMATION SHOWN HEREON IS HEREBY FOREWARNED THAT ANY EXCAVATION UPON THIS SITE MAY RESULT IN THE DISCOVERY OF ADDITIONAL UNDERGROUND UTILITIES NOT SHOWN HEREON. IN GENERAL, UNDERGROUND UTILITY LOCATIONS ARE SHOWN FROM UTILITY MARKINGS, BY OTHERS, AND/OR AS BUILT PLANS, PROVIDED BY OTHERS. REAL LAND SURVEYING MAKES NO WARRANTY OF ANY KIND, EXPRESS OR IMPLIED, WITH RESPECT TO THE EXISTING UTILITIES SHOWN HEREON, AND BELIEVES THAT THE INFORMATION CONTAINED HEREIN IS RELIABLE AND GENERALLY ACCURATE FOR THE PURPOSED INTENDED.

ALTA/NSPS LAND TITLE SURVEY

IN THE NORTHEAST 1/4 OF THE SOUTHWEST 1/4, AND THE NORTHWEST 1/4 OF THE SOUTHEAST 1/4, SECTION 16, TOWNSHIP 15 NORTH, RANGE 7 WEST, CITY OF LA CROSSE, LA CROSSE COUNTY, WISCONSIN

BEING ALL OF UNIT 1 OF MORMON COULEE PLAZA CONDOMINIUM

FOR: ALLIANCE DEVELOPMENT CORP.

RLS
REAL LAND SURVEYING
1356 INTERNATIONAL DRIVE
EAU CLAIRE, WISCONSIN 54701
(715) 514–4116
INFO@RLSWI.COM
RLSWI.COM

SCALE: 1" = 30'

FIELD WORK COMPLETED: 11/11/2025
CADD No. 25415 ALTA

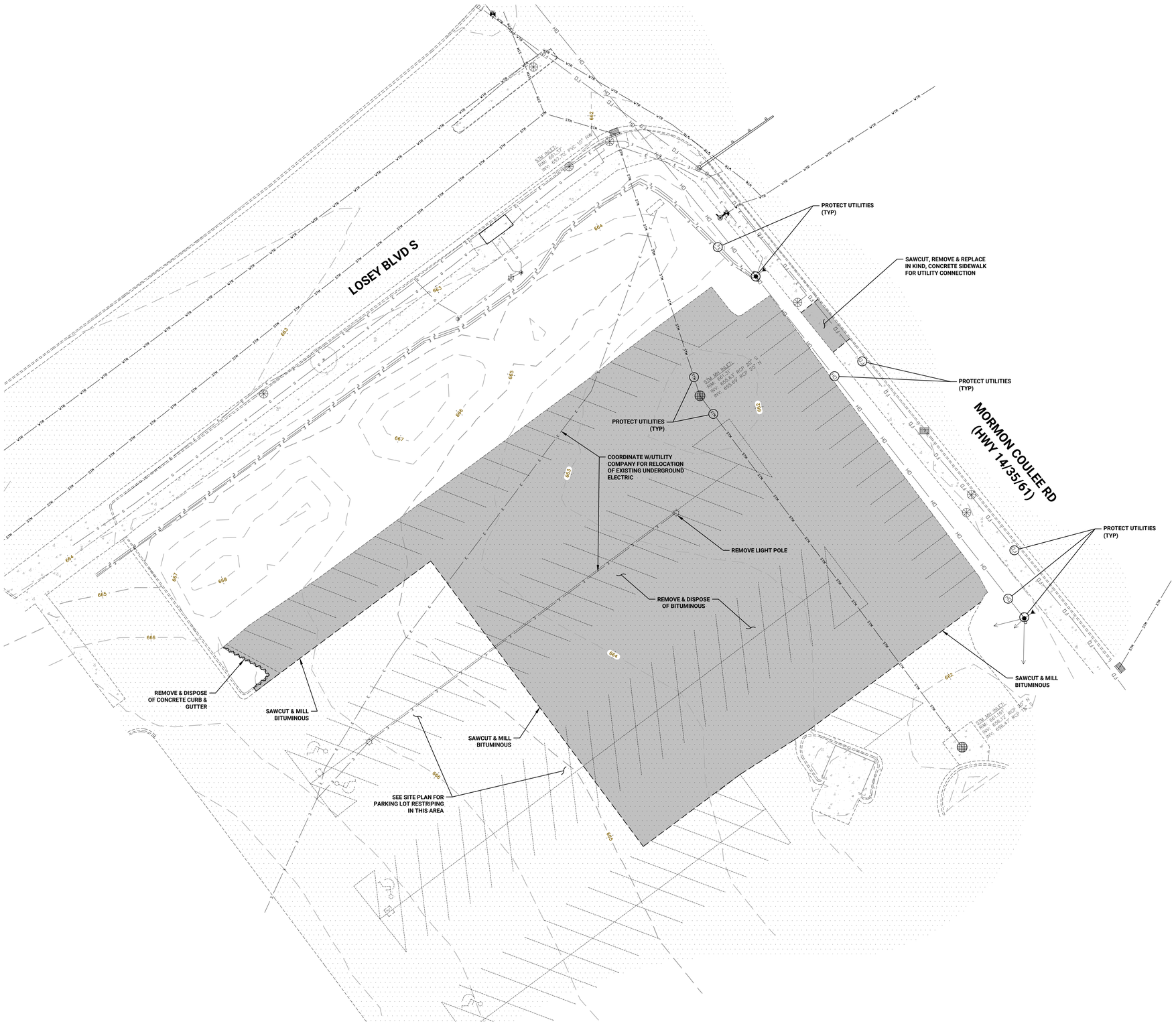

LEGEND

EXISTING	REMOVAL	
		PROPERTY LINE
		EASEMENT LINE
		BITUMINOUS PAVEMENT
		CONCRETE WALK/STOOP
		CONCRETE PAVEMENT
		CURB LINE
STM	AS NOTED	STORM SEWER
SAN		SANITARY SEWER
WTR		WATER MAIN
E E		UNDERGROUND ELECTRIC
G G		UNDERGROUND GAS
FO		UNDERGROUND FIBER OPTIC
OH		OVERHEAD UTILITY
SEE SURVEY		STORM CATCH BASIN
SEE SURVEY		STORM MANHOLE
SEE SURVEY		HYDRANT
SEE SURVEY		GATE VALVE
SEE SURVEY		LIGHT POLE
SEE SURVEY		OTHER SYMBOLS
665		5' CONTOUR
664		1' CONTOUR

BENCHMARK

SEE SURVEY

REMOVAL PLAN NOTES

1. ALL EXISTING UTILITY LOCATIONS SHOWN ARE APPROXIMATE. IT SHALL BE THE RESPONSIBILITY OF THE CONTRACTOR TO VERIFY THE LOCATION, DEPTH AND TYPES OF EXISTING UTILITIES AND TO NOTIFY THE OWNER AND ENGINEER IMMEDIATELY OF ANY DISCREPANCIES OR VARIATIONS FROM THE PLANS.
2. IT SHALL BE THE RESPONSIBILITY OF THE CONTRACTOR TO PROTECT ALL EXISTING UTILITIES, APPURTENANCES AND STRUCTURES NOT INDICATED FOR REMOVAL. DAMAGE CAUSED BY DEMOLITION OPERATIONS SHALL BE REPAIRED AT NO ADDITIONAL COST TO THE OWNER.
3. CONTRACTOR TO REMOVE/RELOCATE EXISTING PRIVATE UTILITIES AS NECESSARY. THE CONTRACTOR SHALL COORDINATE THESE ACTIVITIES WITH THE UTILITY COMPANIES.
4. THE CONTRACTOR IS RESPONSIBLE FOR ALL THE REMOVALS SHOWN ON THE PLANS AND SHALL CONFORM/ADHERE TO ALL GOVERNING STATE AND LOCAL REGULATIONS. ALL PERMITS, APPLICATIONS AND FEES ARE THE RESPONSIBILITY OF THE CONTRACTOR.
5. ALL SAWCUTS SHALL BE FULL-DEPTH CUTS.
6. ALL WORK WITHIN THE ADJACENT STREET RIGHTS OF WAY MUST BE COORDINATED WITH AND APPROVED BY THE CITY PUBLIC WORKS DEPARTMENT.

N

0 10 20 40

< SCALE IN FEET >

CALL BEFORE YOU DIG

811 Know what's below. Call before you dig.

CONTOUR CIVIL DESIGN
P.O. BOX 89, ROCKFORD, MINNESOTA 55373
TEL: 612.730.2265 | WWW.CONTOURCD.COM

I HEREBY CERTIFY THAT THIS PLAN, SPECIFICATION OR REPORT WAS PREPARED BY ME OR UNDER MY DIRECT SUPERVISION AND THAT I AM A DULY LICENSED PROFESSIONAL ENGINEER UNDER THE LAWS OF THE STATE OF WISCONSIN

NAME: JOSEPH T RADACH PE

SIGNATURE:

DATE: 01/09/26 LIC #: E-43913

REVISIONS | ISSUE DATE: 01/09/26 | BY: JTR

1.
2.
3.
4.
5.
6.
7.

OWNER

ALLIANCE DEVELOPMENT
230 Ohio Street, Suite 200
Oshkosh, WI 54902

EXISTING CONDITIONS & REMOVALS PLAN

CHIPOTLE RESTAURANT
Mormon Coulee Road & Losey Blvd S
La Crosse, WI 54601

SHEET NUMBER
C1.1

01/09/26 c:\users\contour civil\dropbox\pc\desktop\contour_jobs\25019 - chipotle la crosse\cad\25019_remove.dwg

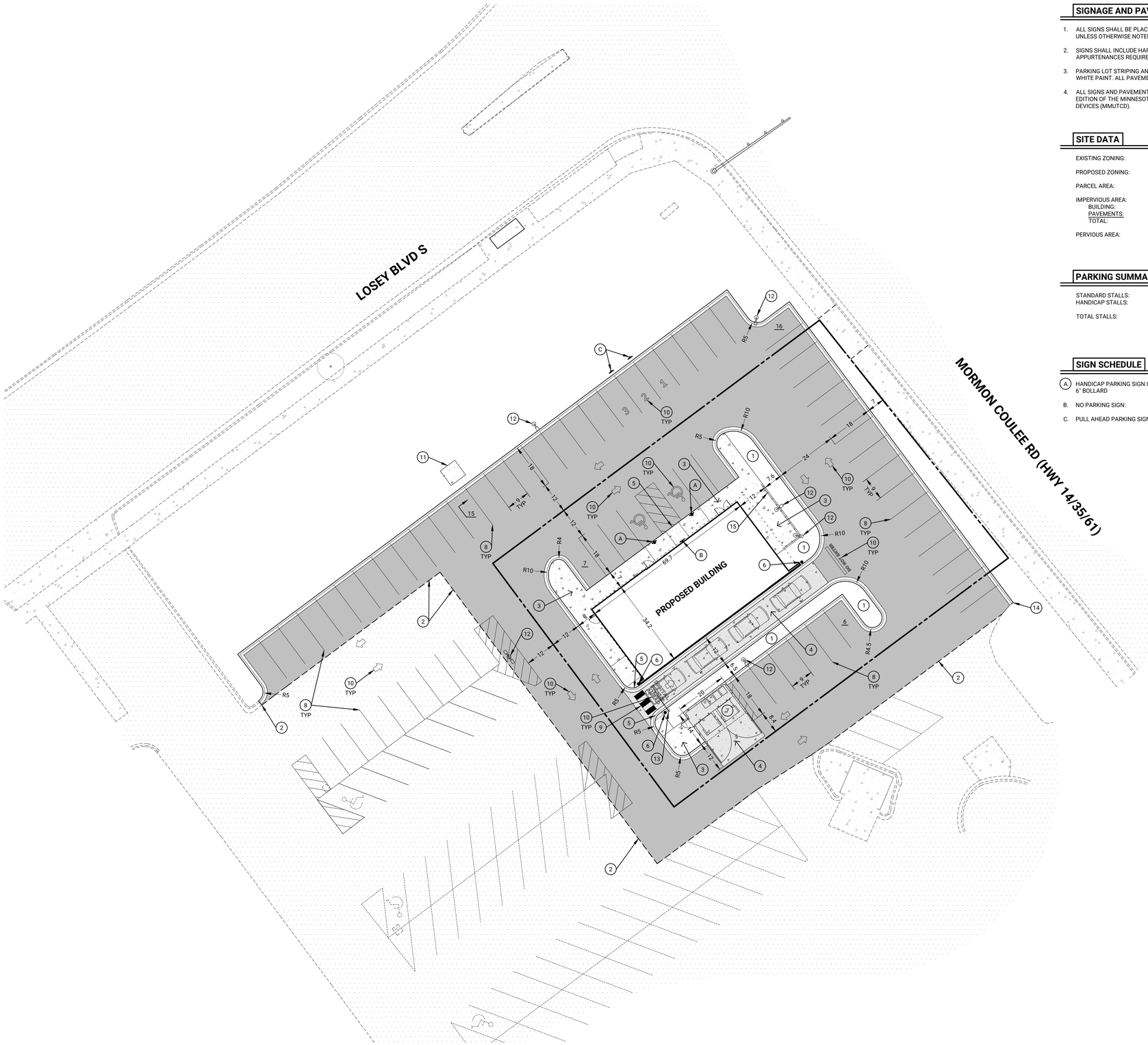

SIGNAGE AND PAVEMENT MARKING NOTES

1. ALL SIGNS SHALL BE PLACED 18" MINIMUM BEHIND BACK OF CURB UNLESS OTHERWISE NOTED.
2. SIGNS SHALL INCLUDE HARDWARE, POST, FOOTING, CASING, AND ALL APPURTENANCES REQUIRED FOR TYPICAL INSTALLATION.
3. PARKING LOT STRIPING AND PAVEMENT MARKINGS SHALL BE 4" SOLID WHITE PAINT. ALL PAVEMENT LETTERING SHALL BE 12" HEIGHT.
4. ALL SIGNS AND PAVEMENT MARKINGS SHALL BE PER THE LATEST EDITION OF THE MINNESOTA MANUAL ON UNIFORM TRAFFIC CONTROL DEVICES (MMUTCD).

SITE DATA

EXISTING ZONING:	C2, COMMERCIAL
PROPOSED ZONING:	C2, COMMERCIAL
PARCEL AREA:	18,603 SF
IMPERVIOUS AREA:	
BUILDING:	2,379 SF 13%
PAVEMENTS:	14,347 SF 77%
TOTAL:	16,726 SF 90%
PERVIOUS AREA:	1,877 SF 10%

PARKING SUMMARY

STANDARD STALLS:	42
HANDICAP STALLS:	2
TOTAL STALLS:	44

SIGN SCHEDULE

A	HANDICAP PARKING SIGN ON: 6" BOLLARD	R7-8m W/R7-8b (12" X 18")
B.	NO PARKING SIGN:	R8-3a (12" X 18")
C.	PULL AHEAD PARKING SIGN:	BY TENANT

LEGEND

EXISTING	PROPOSED	
		PROPERTY LINE
		EASEMENT LINE
		BITUMINOUS PAVEMENT
		CONCRETE WALK/STOOP
		CONCRETE PAVEMENT
		CURB LINE
		STORM SEWER
		SANITARY SEWER
		WATER MAIN
		UNDERGROUND ELECTRIC
		UNDERGROUND GAS
		UNDERGROUND FIBER OPTIC
		OVERHEAD UTILITY
SEE SURVEY		STORM CATCH BASIN
SEE SURVEY		STORM MANHOLE
SEE SURVEY		HYDRANT
SEE SURVEY		GATE VALVE
SEE SURVEY		LIGHT POLE
SEE SURVEY		OTHER SYMBOLS

BENCHMARK

SEE SURVEY

SITE PLAN NOTES

1. ALL DIMENSIONS ARE TO FACE OF CURB AND OUTSIDE FACE OF BUILDING UNLESS OTHERWISE NOTED.
2. ALL CURB AND GUTTER SHALL BE B612 UNLESS OTHERWISE NOTED.
3. TYPICAL PARKING STALLS ARE 9' X 20.
4. ALL PEDESTRIAN RAMPS SHALL MEET CURRENT ADA STANDARDS.
5. UNLESS OTHERWISE SHOWN IN THE PLANS, CONTRACTOR SHALL PROVIDE CONTROL JOINTS AND EXPANSION JOINTS IN SLAB ON GRADE, SIDEWALKS, AND DRIVES PER THE FOLLOWING REQUIREMENTS:

CONTROL JOINTS: WALKS @ 8' SPACING
OTHERS @ 10' SPACING

SAWCUT CONTROL JOINTS MINIMUM ¼ CONCRETE THICKNESS.

EXPANSION JOINTS: WALKS @ 24' SPACING
OTHERS @ 40' SPACING

PROVIDE EXPANSION JOINT AT ALL POINTS WHERE A CHANGE IN PAVEMENT THICKNESS OCCURS AND WHERE NEW PAVEMENT WILL MATCH EXISTING PAVEMENT.

DOWEL ALL EXPANSION JOINTS AT 24" SPACING MAX.

KEYNOTES

* SEE ARCHITECTURAL SITE PLANS FOR ADDITIONAL SITE PLAN NOTES.

1. LANDSCAPE AREA. SEE LANDSCAPE PLAN.
2. MATCH EXISTING CURB/SIDEWALK/PAVEMENT.
3. CONCRETE WALK/PATIO.
4. CONCRETE PAVEMENT/APRON.
5. PEDESTRIAN CURB RAMP.
6. 6" CONCRETE FILLED PIPE BOLLARD.
7. TRASH ENCLOSURE.
8. 4" SOLID WHITE LINE.
9. CROSS-WALK PAVEMENT MARKINGS, SOLID WHITE.
10. SOLID WHITE PAVEMENT MARKING.
11. TRANSFORM PAD. FINAL LOCATION TO BE CONFIRMED BY CONTRACTOR AND ELECTRIC PROVIDER.
12. LIGHT POLE AND BASE.
13. CLEARANCE/HEIGHT RESTRICTION BAR PER TENANT.
14. 3 FT. TAPER OUT CURB.
15. PATIO FENCE, SEE ARCHITECTURAL PLANS.

N

0 10 20 40

< SCALE IN FEET >

CALL BEFORE YOU DIG

811

Know what's **below.**
Call before you dig.

CONTOUR CIVIL DESIGN
P.O. BOX 89, ROCKFORD, MINNESOTA 55373
TEL: 612.730.2265 | WWW.CONTOURCD.COM

I HEREBY CERTIFY THAT THIS PLAN, SPECIFICATION OR REPORT WAS PREPARED BY ME OR UNDER MY DIRECT SUPERVISION AND THAT I AM A DULY LICENSED PROFESSIONAL ENGINEER UNDER THE LAWS OF THE STATE OF WISCONSIN

NAME: JOSEPH T RADACH PE

SIGNATURE:

DATE: 01/09/26 LIC #: E-43913

REVISIONS | ISSUE DATE: 01/09/26 | BY: JTR

1.
2.
3.
4.
5.
6.
7.

OWNER

ALLIANCE DEVELOPMENT
230 Ohio Street, Suite 200
Oshkosh, WI 54902

SITE PLAN

CHIPOTLE RESTAURANT
Mormon Coulee Road & Losey Blvd S
La Crosse, WI 54601

SHEET NUMBER
C2.1

01/09/26 c:\users\contour civil\dropbox\pc\desktop\contour_jobs\25019 - chipotle la crosse\cad\25019_site.dwg

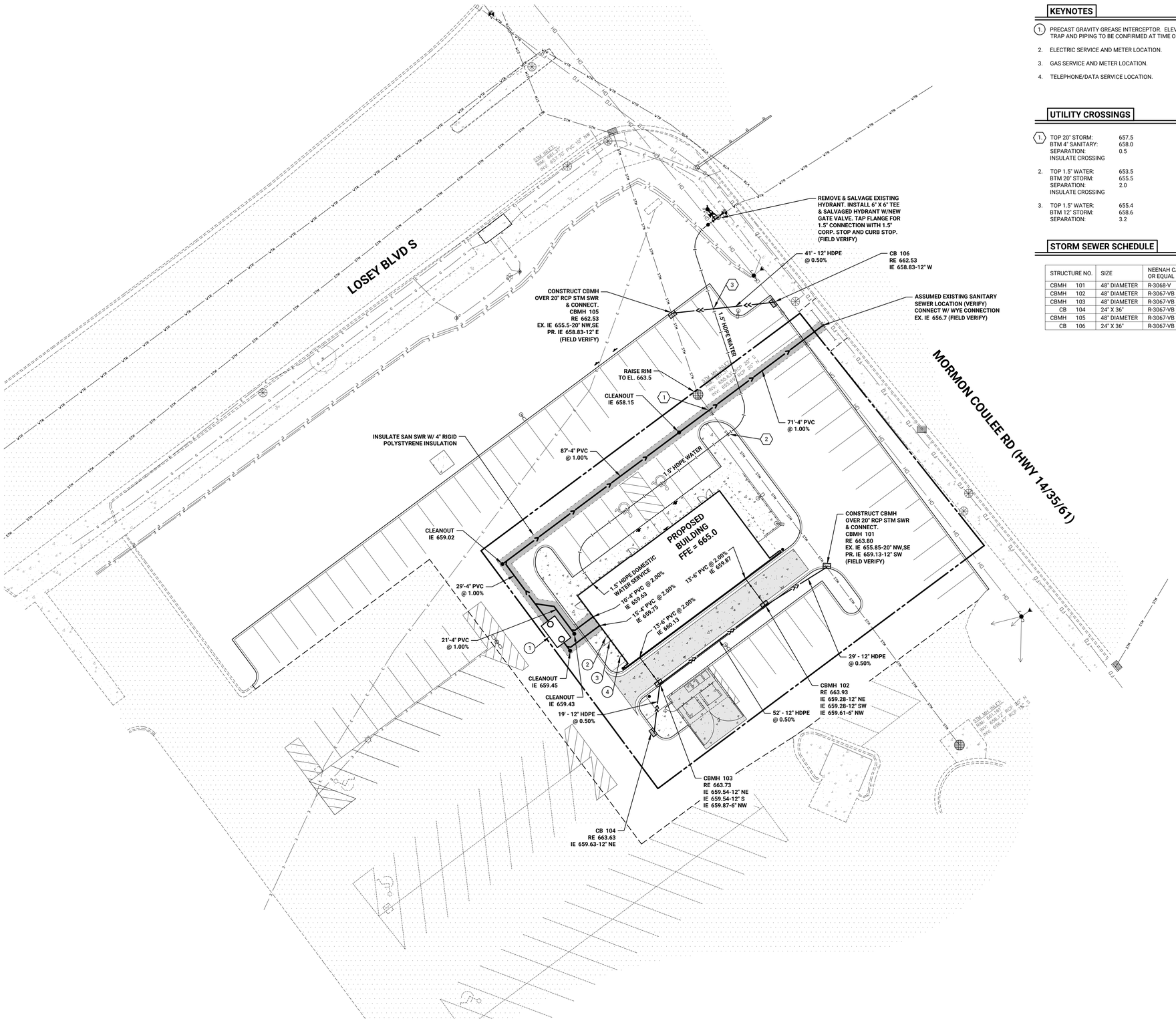

KEYNOTES

1. PRECAST GRAVITY GREASE INTERCEPTOR. ELEVATIONS OF GREASE TRAP AND PIPING TO BE CONFIRMED AT TIME OF CONSTRUCTION.
2. ELECTRIC SERVICE AND METER LOCATION.
3. GAS SERVICE AND METER LOCATION.
4. TELEPHONE/DATA SERVICE LOCATION.

UTILITY CROSSINGS

1. TOP 20" STORM: 657.5
   BTM 4" SANITARY: 658.0
   SEPARATION: 0.5
   INSULATE CROSSING
2. TOP 1.5" WATER: 653.5
   BTM 20" STORM: 655.5
   SEPARATION: 2.0
   INSULATE CROSSING
3. TOP 1.5" WATER: 655.4
   BTM 12" STORM: 658.6
   SEPARATION: 3.2

STORM SEWER SCHEDULE

STRUCTURE NO.		SIZE	NEENAH CASTING OR EQUAL
CBMH	101	48" DIAMETER	R-3068-V
CBMH	102	48" DIAMETER	R-3067-VB
CBMH	103	48" DIAMETER	R-3067-VB
CB	104	24" X 36"	R-3067-VB
CBMH	105	48" DIAMETER	R-3067-VB
CB	106	24" X 36"	R-3067-VB

LEGEND

EXISTING	PROPOSED	
		PROPERTY LINE
		EASEMENT LINE
		BITUMINOUS PAVEMENT
		CONCRETE WALK/STOOP
		CONCRETE PAVEMENT
		CURB LINE
STM		STORM SEWER
SAN		SANITARY SEWER
WTR		WATER MAIN
E	E	UNDERGROUND ELECTRIC
G	G	UNDERGROUND GAS
FO		UNDERGROUND FIBER OPTIC
OH		OVERHEAD UTILITY
SEE SURVEY		STORM CATCH BASIN
SEE SURVEY		STORM MANHOLE
SEE SURVEY		HYDRANT
SEE SURVEY		GATE VALVE
SEE SURVEY		LIGHT POLE
SEE SURVEY		OTHER SYMBOLS

BENCHMARK

SEE SURVEY

GOVERNING SPECIFICATIONS

1. THE LATEST EDITION OF THE WISCONSIN DEPARTMENT OF TRANSPORTATION "STANDARD SPECIFICATIONS" AND "CONSTRUCTION & MATERIALS MANUAL".
2. THE CITY OF LA CROSSE STANDARD DETAILS AND SPECIFICATIONS.
3. THE LATEST EDITION OF THE WISCONSIN MANUAL ON UNIFORM TRAFFIC CONTROL DEVICES (WMUTCD).

UTILITY PLAN NOTES

1. SANITARY SEWER, WATER MAIN, AND STORM SEWER CONSTRUCTION SHALL BE IN ACCORDANCE WITH THE LATEST EDITIONS OF THE CITY'S STANDARD DETAIL SPECIFICATIONS AND THE WISCONSIN PLUMBING CODE.
2. A MINIMUM OF 7.5 FEET OF COVER SHALL BE REQUIRED FOR ALL WATER MAIN AND FORCEMAIN.
3. A MINIMUM OF 2.0 FEET OF VERTICAL SEPARATION SHALL BE REQUIRED FOR ALL UTILITY CROSSINGS.
4. USE SOLID-CORE, SDR-35, ASTM D3034 POLYVINYL CHORIDE (PVC) PIPE FOR DESIGNATED PVC STORM SEWER AND SANITARY SEWER WITH APPROVED FITTINGS UNLESS OTHERWISE NOTED.
5. PVC PIPE DESIGNATED AS PVC SCHEDULE 40, SHALL MEET THE REQUIREMENTS OF ASTM D2665 FOR SCHEDULE 40.
6. POLYETHYLENE STORM SEWERS MUST MEET ASTM F714 OR ASTM F894.
7. ALL WATER MAIN WORK AND TESTING SHALL BE COORDINATED WITH THE CITY'S PUBLIC WORKS DEPARTMENT.
8. ALL WATER MAIN MUST HAVE A CONDUCTIVITY TEST, HYDROSTATIC TEST, AND BACTERIA TEST BEFORE THE PROJECT IS COMPLETE AND TURNED ON.
9. FINAL BUILDING UTILITY SERVICES AND DOWNSPOUT LOCATIONS SHALL BE VERIFIED WITH ARCHITECTURAL AND PLUMBING PLANS.
10. INSTALL METER BOX FRAME AND SOLID LID (NEENAH R-1914-A, OR APPROVED EQUAL) OVER ALL CLEANOUTS.

N

0 10 20 40

< SCALE IN FEET >

CALL BEFORE YOU DIG

811 Know what's below. Call before you dig.

CONTOUR CIVIL DESIGN
P.O. BOX 89, ROCKFORD, MINNESOTA 55373
TEL: 612.730.2265 | WWW.CONTOURCD.COM

I HEREBY CERTIFY THAT THIS PLAN, SPECIFICATION OR REPORT WAS PREPARED BY ME OR UNDER MY DIRECT SUPERVISION AND THAT I AM A DULY LICENSED PROFESSIONAL ENGINEER UNDER THE LAWS OF THE STATE OF WISCONSIN

NAME: JOSEPH T RADACH PE

SIGNATURE:

DATE: 01/09/26 LIC #: E-43913

REVISIONS	ISSUE DATE: 01/09/26	BY: JTR
1.		
2.		
3.		
4.		
5.		
6.		
7.		

OWNER

ALLIANCE DEVELOPMENT
230 Ohio Street, Suite 200
Oshkosh, WI 54902

UTILITY PLAN

CHIPOTLE RESTAURANT
Mormon Coulee Road & Losey Blvd S
La Crosse, WI 54601

SHEET NUMBER
C3.1

01/09/26 C:\Users\contour civil\dropbox\pc\Desktop\contour_jobs\25019 - chipotle la crosse\cad\25019_utility.dwg

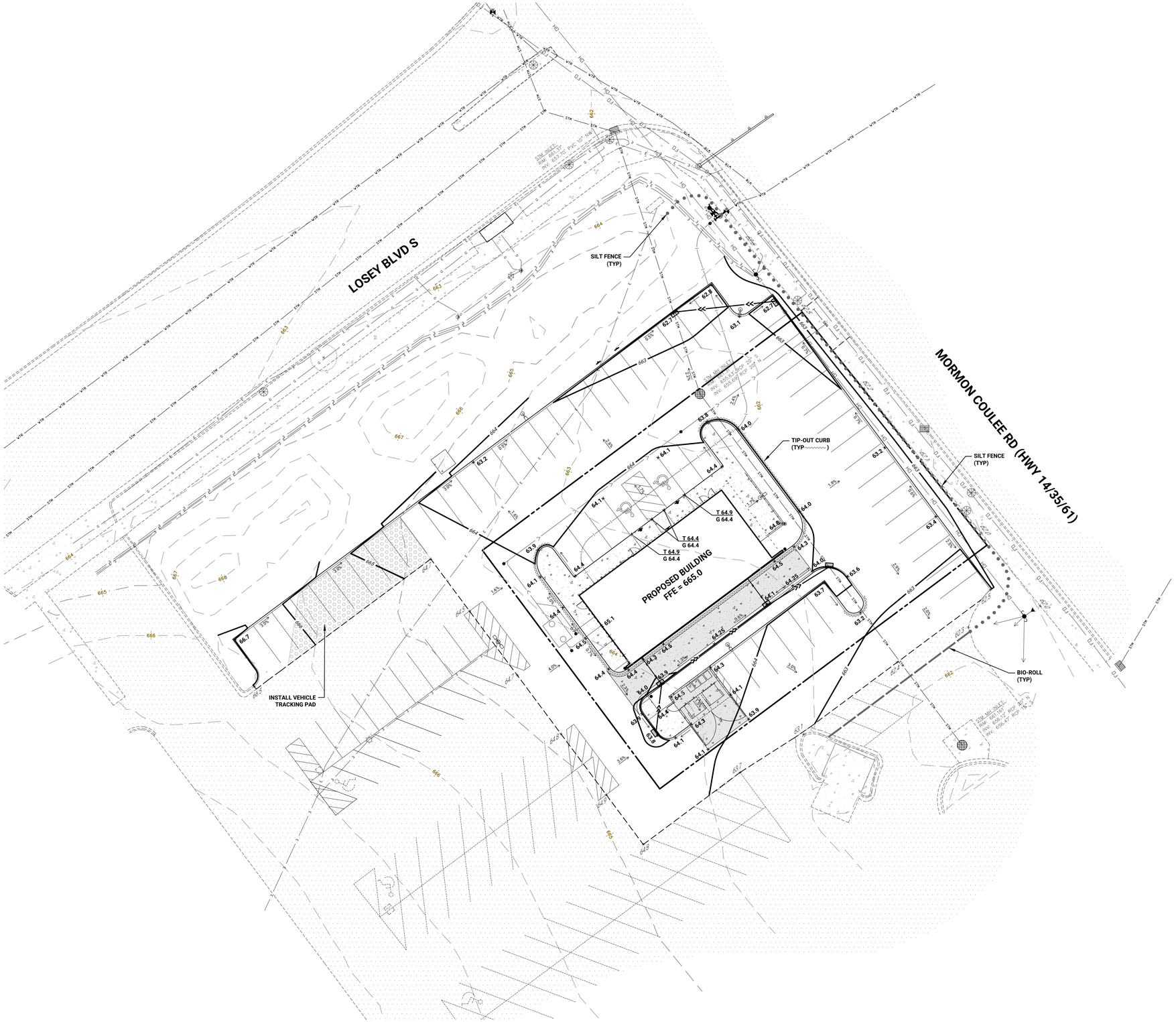

LEGEND

EXISTING	PROPOSED	
		PROPERTY LINE
		EASEMENT LINE
		BITUMINOUS PAVEMENT
		CONCRETE WALK/STOOP
		CONCRETE PAVEMENT
		CURB LINE
STM	>>	STORM SEWER
SAN	>	SANITARY SEWER
WTR		WATER MAIN
E	E	UNDERGROUND ELECTRIC
G	G	UNDERGROUND GAS
FO		UNDERGROUND FIBER OPTIC
OH		OVERHEAD UTILITY
SEE SURVEY		STORM CATCH BASIN
SEE SURVEY		STORM MANHOLE
SEE SURVEY		HYDRANT
SEE SURVEY		GATE VALVE
SEE SURVEY		LIGHT POLE
SEE SURVEY		OTHER SYMBOLS
665	665	5' CONTOUR
664	664	1' CONTOUR
57.1	57.1	SPOT ELEVATION (CURB ELEVATIONS ARE TO GUTTER LINE)
		SILT FENCE
		ROCK ENTRANCE

BENCHMARK

SEE SURVEY

GOVERNING SPECIFICATIONS

1. THE LATEST EDITION OF THE WISCONSIN DEPARTMENT OF TRANSPORTATION "STANDARD SPECIFICATIONS" AND "CONSTRUCTION & MATERIALS MANUAL".
2. THE CITY OF LA CROSSE STANDARD DETAILS AND SPECIFICATIONS.
3. THE LATEST EDITION OF THE WISCONSIN MANUAL ON UNIFORM TRAFFIC CONTROL DEVICES (WMUTCD).

GRADING NOTES

1. VEHICLE TRACKING REDUCTION DEVICE, SILT FENCE, AND EXISTING CATCH BASIN INLET PROTECTION SHALL BE INSTALLED PRIOR TO GRADING CONSTRUCTION, AND SHALL BE MAINTAINED UNTIL THE SITE HAS BEEN STABILIZED.
2. CONTRACTOR SHALL FIELD VERIFY THE LOCATIONS AND ELEVATIONS OF EXISTING UTILITIES PRIOR TO THE START OF GRADING CONSTRUCTION. THE CONTRACTOR SHALL NOTIFY THE ENGINEER IMMEDIATELY OF DISCREPANCIES OR VARIATIONS FROM THE PLAN.
3. CONTRACTOR SHALL STRIP, STOCKPILE AND RESPREAD SUFFICIENT TOPSOIL TO PROVIDE A MINIMUM OF 6" OF TOPSOIL OVER ALL DISTURBED AREAS THAT WILL BE SODDED, SEEDED OR LANDSCAPED.
4. ALL DISTURBED AREAS MUST BE STABILIZED WITHIN 7 CALENDARS DAYS AFTER LAND-DISTURBING WORK HAS TEMPORARILY OR PERMANENTLY CEASED.
5. ALL SLOPES STEEPER THAN 3:1 SHALL HAVE MNDOT CAT.1 EROSION CONTROL BLANKET AND SEED, OR APPROVED EQUAL.
6. STOCKPILES SHALL BE STABILIZED WITHIN 7 DAYS OF ROUGH GRADING OR INACTIVITY.
7. ALL WORK WITHIN THE ADJACENT STREET RIGHTS OF WAY MUST BE COORDINATED WITH AND APPROVED BY THE CITY PUBLIC WORKS DEPARTMENT.

N

0 10 20 40

< SCALE IN FEET >

CALL BEFORE YOU DIG

811 Know what's below. Call before you dig.

CONTOUR CIVIL DESIGN
P.O. BOX 89, ROCKFORD, MINNESOTA 55373
TEL: 612.730.2265 | WWW.CONTOURCD.COM

I HEREBY CERTIFY THAT THIS PLAN, SPECIFICATION OR REPORT WAS PREPARED BY ME OR UNDER MY DIRECT SUPERVISION AND THAT I AM A DULY LICENSED PROFESSIONAL ENGINEER UNDER THE LAWS OF THE STATE OF WISCONSIN

NAME: JOSEPH T RADACH PE

SIGNATURE:

DATE: 01/09/26 LIC #: E-43913

REVISIONS
1.
2.
3.
4.
5.
6.
7.

ISSUE DATE: 01/09/26 BY: JTR

OWNER
ALLIANCE DEVELOPMENT
230 Ohio Street, Suite 200
Oshkosh, WI 54902

GRADING AND DRAINAGE PLAN

CHIPOTLE RESTAURANT
Mormon Coulee Road & Losey Blvd S
La Crosse, WI 54601

SHEET NUMBER
C4.1

01/09/26 c:\users\contour civil\dropbox\pc\desktop\contour_jobs\23019 - chipotle la crosse\cad\23019_grade.dwg

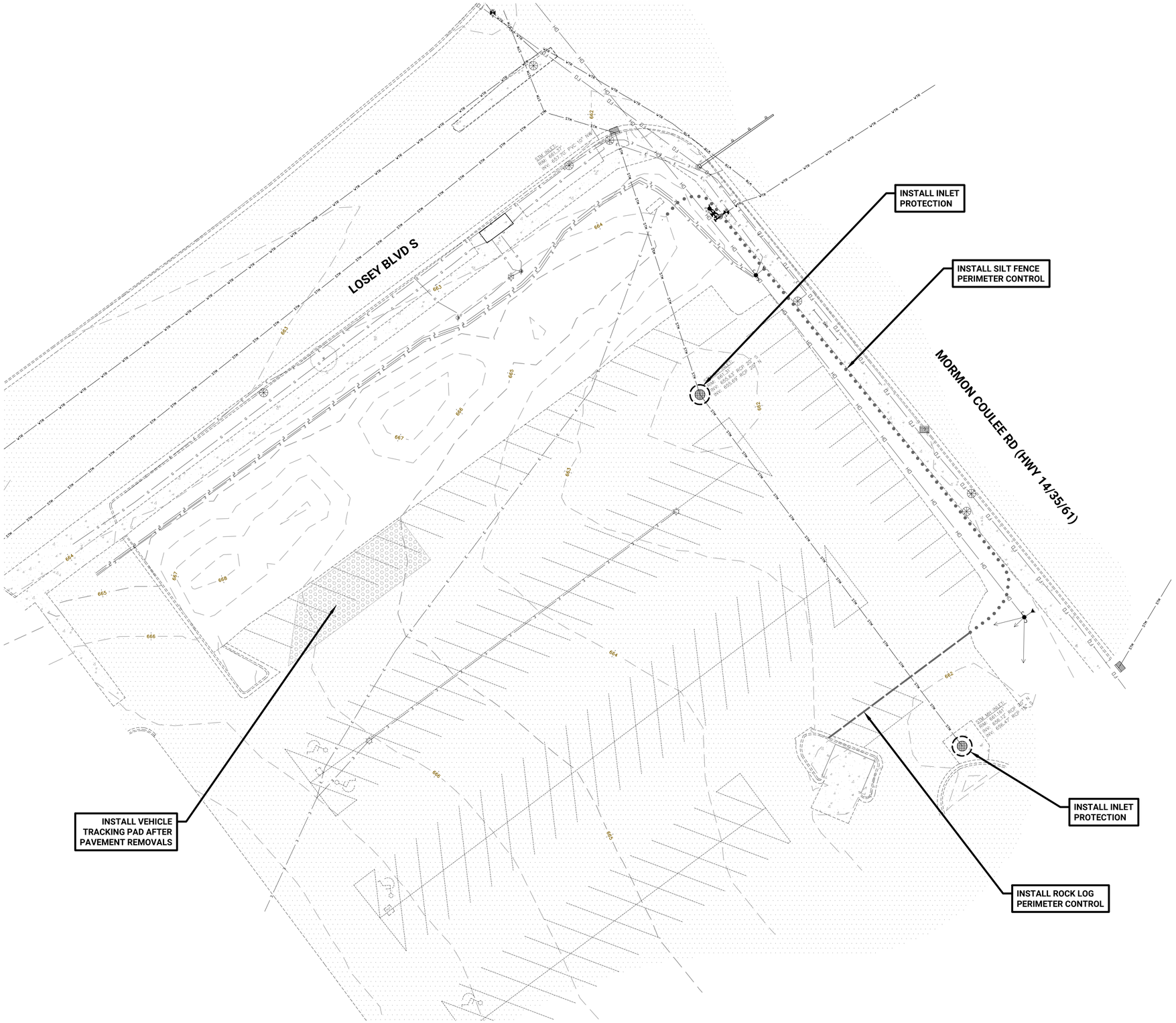

LEGEND

EXISTING	PROPOSED	
		PROPERTY LINE
		EASEMENT LINE
		BITUMINOUS PAVEMENT
		CONCRETE WALK/STOOP
		CONCRETE PAVEMENT
		CURB LINE
STM	>>	STORM SEWER
SAN	>	SANITARY SEWER
WTR		WATER MAIN
E	E	UNDERGROUND ELECTRIC
G	G	UNDERGROUND GAS
FO		UNDERGROUND FIBER OPTIC
OH		OVERHEAD UTILITY
SEE SURVEY		STORM CATCH BASIN
SEE SURVEY		STORM MANHOLE
SEE SURVEY		HYDRANT
SEE SURVEY		GATE VALVE
SEE SURVEY		LIGHT POLE
SEE SURVEY		OTHER SYMBOLS
665	665	5' CONTOUR
664	664	1' CONTOUR
57.1	57.1	SPOT ELEVATION (CURB ELEVATIONS ARE TO GUTTER LINE)
		SILT FENCE
		ROCK ENTRANCE

BENCHMARK

SEE SURVEY

N

0 10 20 40

< SCALE IN FEET >

CALL BEFORE YOU DIG

811

Know what's **below.** **Call** before you dig.

CONTOUR CIVIL DESIGN
P.O. BOX 89, ROCKFORD, MINNESOTA 55373
TEL: 612.730.2265 | WWW.CONTOURCD.COM

I HEREBY CERTIFY THAT THIS PLAN, SPECIFICATION OR REPORT WAS PREPARED BY ME OR UNDER MY DIRECT SUPERVISION AND THAT I AM A DULY LICENSED PROFESSIONAL ENGINEER UNDER THE LAWS OF THE STATE OF WISCONSIN

NAME: JOSEPH T RADACH PE

SIGNATURE:

DATE: 01/09/26 LIC #: E-43913

REVISIONS	ISSUE DATE: 01/09/26	BY: JTR
1.		
2.		
3.		
4.		
5.		
6.		
7.		

OWNER

ALLIANCE DEVELOPMENT
230 Ohio Street, Suite 200
Oshkosh, WI 54902

EROSION CONTROL PLAN PHASE I

CHIPOTLE RESTAURANT
Mormon Coulee Road & Losey Blvd S
La Crosse, WI 54601

SHEET NUMBER

C5.1

01/09/26 c:\users\contour civil\dropbox\pc\desktop\contour_\jobs\25019 - chipotle la crosse\cad\25019_swppp.dwg

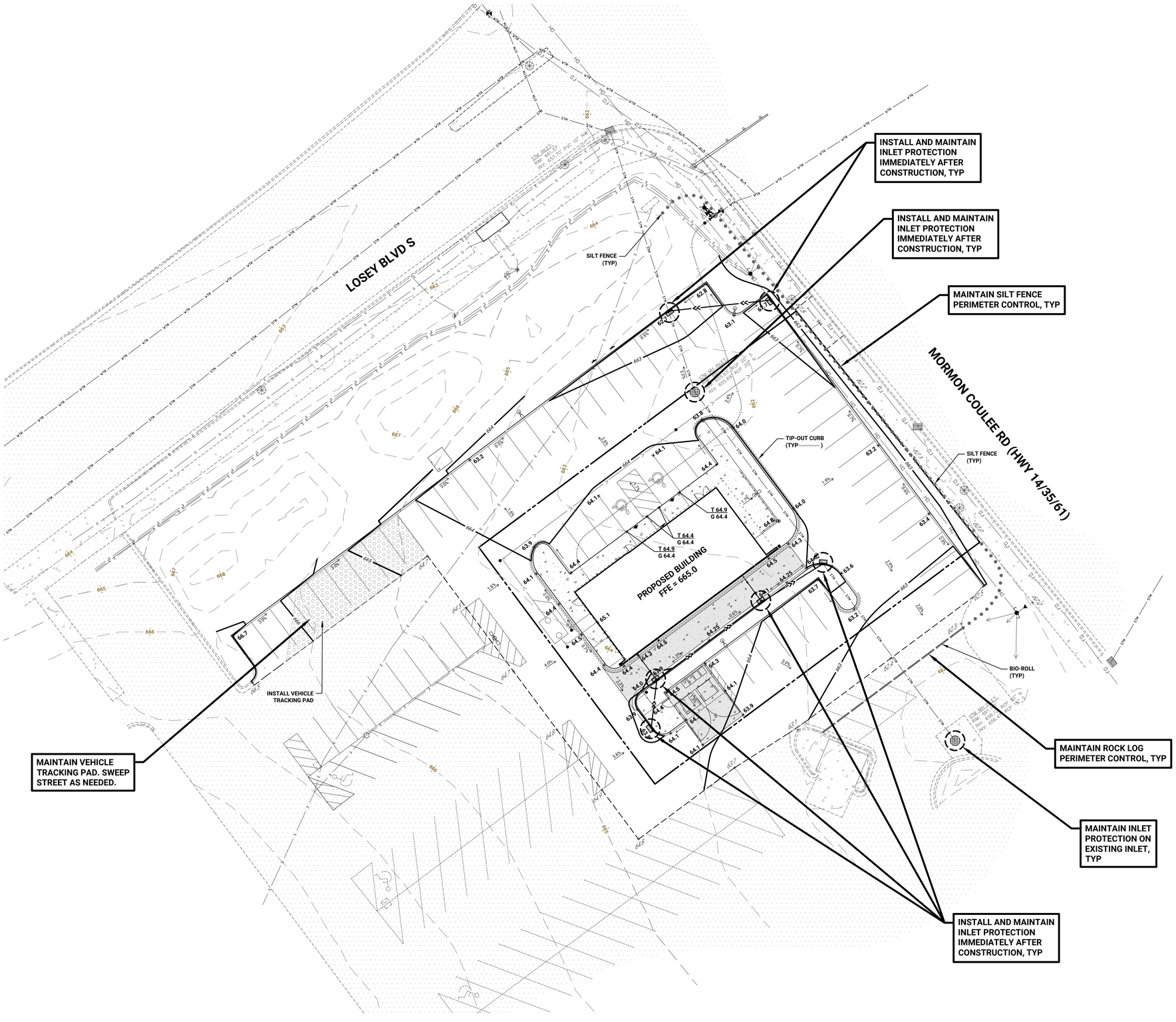

LEGEND

EXISTING	PROPOSED	
		PROPERTY LINE
		EASEMENT LINE
		BITUMINOUS PAVEMENT
		CONCRETE WALK/STOOP
		CONCRETE PAVEMENT
		CURB LINE
STM	>>	STORM SEWER
SAN	>	SANITARY SEWER
WTR		WATER MAIN
E	E	UNDERGROUND ELECTRIC
G	G	UNDERGROUND GAS
FO		UNDERGROUND FIBER OPTIC
OH		OVERHEAD UTILITY
SEE SURVEY		STORM CATCH BASIN
SEE SURVEY		STORM MANHOLE
SEE SURVEY		HYDRANT
SEE SURVEY		GATE VALVE
SEE SURVEY		LIGHT POLE
SEE SURVEY		OTHER SYMBOLS
665	665	5' CONTOUR
664	664	1' CONTOUR
57.1	57.1	SPOT ELEVATION (CURB ELEVATIONS ARE TO GUTTER LINE)
		SILT FENCE
		ROCK ENTRANCE

BENCHMARK

SEE SURVEY

0 10 20 40
< SCALE IN FEET >

CALL BEFORE YOU DIG

811
Know what's **below.**
Call before you dig.

CONTOUR CIVIL DESIGN
P.O. BOX 89, ROCKFORD, MINNESOTA 55373
TEL: 612.730.2265 | WWW.CONTOURCD.COM

I HEREBY CERTIFY THAT THIS PLAN, SPECIFICATION OR REPORT WAS PREPARED BY ME OR UNDER MY DIRECT SUPERVISION AND THAT I AM A DULY LICENSED PROFESSIONAL ENGINEER UNDER THE LAWS OF THE STATE OF WISCONSIN

NAME: JOSEPH T RADACH PE
SIGNATURE:
DATE: 01/09/26 LIC #: E-43913

REVISIONS	ISSUE DATE: 01/09/26	BY: JTR
1.		
2.		
3.		
4.		
5.		
6.		
7.		

OWNER
ALLIANCE DEVELOPMENT
230 Ohio Street, Suite 200
Oshkosh, WI 54902

EROSION CONTROL PLAN
PHASE II

CHIPOTLE RESTAURANT
Mormon Coulee Road & Losey Blvd S
La Crosse, WI 54601

SHEET NUMBER
C5.2

01/09/26 c:\users\contour civil\dropbox\qcs\desktop\contour_qdat\23019 - chipotle la crosse\cad\23019_sweps.dwg

PROJECT INFORMATION

PROJECT NAME:	CHIPOTLE RESTAURANT
STREET ADDRESS:	XXXX MORMON COULEE ROAD
CITY:	LA CROSSE
COUNTY:	ST. CROIX
STATE:	WISCONSIN
ZIP CODE:	54601
LAT/LONG:	43.7748, -91.2201
BOUNDARY AREA:	0.427 ACRES
EXISTING IMPERVIOUS:	0.406 ACRES
POST IMPERVIOUS:	0.384 ACRES
IMPERVIOUS REDUCTION:	0.022 ACRES
DISTURBED AREA:	0.80 ACRES
OWNER:	ALLIANCE DEVELOPMENT

RESPONSIBLE PARTIES

SWPPP DESIGN:	JOSEPH RADACH PE
TRAINING:	DESIGN OF CONSTRUCTION SWPPP, U OF MN (5/26 EXPIRATION)
SITE MANAGER:	_____
TRAINING:	_____
LONG TERM O&M:	ALLIANCE DEVELOPMENT

SWPPP CONTENT

THE SWPPP CONTAINS ALL SHEETS WITHIN THE CONSTRUCTION PLAN SET AND INCLUDES THE STORMWATER MANAGEMENT PLAN, INCORPORATED HEREIN BY REFERENCE. IN DEVELOPING THIS SWPPP, THE TEMPORARY AND PERMANENT BMPS WERE DESIGNED BASED ON EXPECTED RAINFALLS OF 3 INCHES IN 24 HOURS DURING CONSTRUCTION, WITH EXTREME EVENTS RANGING FROM 5 TO 7 INCHES IN 24 HOURS.

EXISTING CONDITIONS

THE SITE IS LOCATED IN THE SOUTH QUADRANT OF MORMON COULEE ROAD AND LOSEY BOULEVARD SOUTH IN LA CROSSE, LA CROSSE COUNTY, WISCONSIN. THE SITE IS BOUNDED BY MORMON COULEE ROAD ON THE NORTHEAST, LOSEY BLVD S ON THE NORTHWEST, AND BY EXISTING COMMERCIAL PROPERTY TO THE SOUTHWEST AND SOUTEAST. THE SITE IS CURRENTLY AN EXISTING BITUMINOUS PARKING LOT THAT IS PART OF A LARGE STRIP RETAIL CENTER.

THE SITE BOUNDARY CONSISTS OF 0.427 ACRES. THERE IS APPROXIMATELY 0.406 ACRES OF IMPERVIOUS SURFACE ONSITE, WHICH CONSISTS OF THE EXISTING STRIP RETAIL CENTER PARKING LOT. THE SITE HAS A RELATIVELY FLAT TOPOGRAPHY, WITH ELEVATIONS RANGING FROM 664 IN THE SOUTHWEST DOWN TO ABOUT 661 IN THE NORTH PORTION OF THE SITE. ALL STORMWATER FROM THE SITE DRAINS NORTHEAST TO EXISTING STORM SEWER CATCH BASINS LOCATED IN THE PARKING LOT.

PROPOSED CONDITIONS

ALLIANCE DEVELOPMENT PLANS ON DEVELOPING THE SITE INTO A CHIPOTLE RESTAURANT WITH ASSOCIATED PARKING AND DRIVE AREAS. DURING CONSTRUCTION, APPROXIMATELY 0.80 ACRES WILL BE DISTURBED. AFTER CONSTRUCTION, THE SITE WILL CONTAIN 0.384 ACRES OF IMPERVIOUS SURFACE, WHICH EQUATES TO A 0.022 ACRE REDUCTION.

STORM SEWER WILL BE USED TO COLLECT STORMWATER FROM THE SITE. THE STORM SEWER WILL BE CONNECTED TO THE EXISTING STORM SEWER THAT TRAVERSES THE SITE AND CONNECTS TO TRUNK STORM SEWER IN LOSEY BOULEVARD SOUTH.

SOIL INFORMATION

AT THE TIME OF THIS REPORT, A GEOTECHNICAL REPORT WAS NOT AVAILABLE.

SITE CONTAMINATION

THE SITE IS NOT KNOWN TO BE CONTAMINATED.

STORMWATER RECEIVING WATERS

THE MISSISSIPPI RIVER IS LOCATED 1,800 FEET SOUTHWEST OF THE SITE AND RECEIVES ALL STORMWATER FROM THE SITE.

WETLAND CONSIDERATIONS

THERE ARE NO KNOWN WETLANDS ONSITE.

PERMANENT STORMWATER MANAGEMENT SYSTEM

THE SITE IS UNDER ONE ACRE OF DISTURBANCE AND RESULTS IN A NET REDUCTION OF IMPERVIOUS SURFACE. THEREFORE, THE SITE IS EXEMPT FROM THE WISCONSIN DNR STORMWATER REQUIREMENTS.

BMP IMPLEMENTATION SCHEDULE

PRIOR TO CONSTRUCTION, IMPLEMENT THE FOLLOWING BMPS:

- VEHICLE TRACKING PAD
- PERIMETER CONTROL
- STORM DRAIN INLET PROTECTION

DURING CONSTRUCTION, IMPLEMENT THE FOLLOWING BMPS:

- PHASED GRADING
- STREET SWEEPING
- STABILIZATION OF EXPOSED SOILS
- STABILIZATION OF DITCHES OR SWALES
- STOCKPILE PERIMETER CONTROL & STABILIZATION
- MINIMIZATION OF SOIL COMPACTION AND PRESERVATION OF TOPSOIL
- CONCRETE WASHOUT AREA
- STORM DRAIN INLET PROTECTION

EROSION AND SEDIMENT CONTROL ESTIMATED QUANTITIES

VEHICLE TRACKING PAD	1 EA
SILT FENCE	240 LF
ROCK LOGS	70 LF
INLET PROTECTION	8 EA
EROSION CONTROL BLANKET	AS NEEDED
TURF ESTABLISHMENT	0.5 AC

CONSTRUCTION SITE STORM WATER RUNOFF PERMIT - EXEMPT

THE SITE IS EXEMPT FROM THE WISCONSIN DNR CONSTRUCTION SITE STORM WATER RUNOFF PERMIT. THE FOLLOW SECTIONS ARE FOR REFERENCE ONLY.

PERMIT REQUIREMENTS & SWPPP IMPLEMENTATION

THE FOLLOWING SECTIONS WERE TAKEN FROM THE WISCONSIN DEPARTMENT OF NATURAL RESOURCES GENERAL PERMIT TO DISCHARGE UNDER THE WISCONSIN POLLUTANT DISCHARGE ELIMINATION SYSTEM. IT IS THE RESPONSIBILITY OF THE PERMITTEE TO FOLLOW ALL REQUIREMENTS OF THE WPDES PERMIT REQUIREMENTS.

2. NOTICE OF INTENT, NOTICE OF TERMINATION, AND MINIMUM CONTROL REQUIREMENTS

2.1 Application Procedures

2.1.1 Except as provided in section 1.6.3, a person required to obtain coverage under this permit (applicant) for storm water discharge from a construction site shall submit a completed NOI to the department in accordance with the requirements of subch. III of ch. NR 216, Wis. Adm. Code. At a minimum, the applicant shall submit the completed NOI to the department in accordance with the requirements of this section, at least 14 working days prior to beginning any land disturbing construction activities. The department may confer permit coverage within the 14 working days or may withhold permit coverage beyond 14 working days to request additional information or to review project compliance with erosion control, storm water management, wetland protection, endangered and threatened resources, or historic property requirements. In either case, the department will notify the applicant in writing. The applicant shall submit the NOI electronically through the department's construction site electronic application process. The Notice of Intent requires applicants to provide information on the applicant, facility location, and applicable information pursuant to ss. NR 216.46 and NR 216.47 Wis. Adm. Code.

Note: The department's construction site electronic application process webpage is available at: http://dnr.wi.gov/topic/Stormwater/construction/forms.html. For applicants with no computer capability, the department may accept a paper version of the NOI application on a case-by-case basis. The paper application must be obtained directly by contacting the department at 888-936- 7463 or by writing to the Wisconsin DNR, Storm Water Program - WT/3, Box 7921, Madison, Wisconsin 53707-7921. Submittal of the paper application must be accompanied by a letter from the department approving its use.

2.1.2 The applicant shall submit erosion control and storm water management plans as described in Section 3 of this permit to the department as required by s. NR 216.44(2), Wis. Adm. Code, with the NOI.

2.1.3 The applicant shall submit the application fee to the department in accordance with s. NR 216.43(2), Wis. Adm. Code.

2.1.4 The NOI form shall be signed in accordance with s. NR 216.43(3), Wis. Adm. Code.

2.2 Permit Certificate

The permittee shall post the permit certificate (DNR Publication # WT-813 rev. 10/11) in a conspicuous place on the construction site. The department will provide the permit certificate to the permittee with the letter of permit coverage.

Note: The requirement to post the permit certificate in a conspicuous place on the construction site is intended to provide the public an easily accessible and viewable document with contact information for the construction site. The department recommends posting the certificate near each main entrance to the construction site in a location where it is legible from a public right-of-way. Permittees should consider providing sufficient weather protection to avoid the certificate from becoming unreadable.

2.3 Failure to Notify

Persons who fail to notify the department of their intent to be covered under this permit and who discharge storm water to waters of the state associated with land disturbing construction activities of one acre or more, are in violation of ch. 283, Wis. Stats., ch. NR 216, Wis. Adm. Code. Failure to obtain permit coverage may result in forfeitures of up to $10,000 per day, pursuant to s. 283.91(2), Wis. Stats.

2.4 Incomplete Notice of Intent

Within 14 working days after the date the department receives the NOI, the department may require an applicant to submit data necessary to complete any deficient NOI or may require the applicant to submit a complete new NOI when the deficiencies are extensive or the appropriate application process has not been used.

2.5 Date Coverage Effective

Unless notified by the department to the contrary, applicants who submit a complete NOI in accordance with the provisions of subch. III of ch. NR 216, Wis. Adm. Code, are authorized to discharge storm water from land disturbing construction sites under the terms and conditions of this permit 14 working days after the date the department receives the NOI. The department may deny coverage under this permit and require submittal of an application for an individual WPDES permit based on a review of the completed NOI or other information.

2.6 Use of Information

All information contained in the NOI other than that specified as confidential by the department shall be available to the public. Confidential treatment will be considered only for information identified in documents submitted by the applicant separate from non-confidential information which meets the requirements of s. 283.55(2)(c), Wis. Stats., and for which written application for confidentiality has been made pursuant to s. NR 2.19, Wis. Adm. Code.

2.7 Notice of Termination

Permittees shall submit a Notice of Termination (NOT) to the department within 45 days after a construction site has undergone final stabilization, temporary sediment control practices have been removed and all land disturbing construction activities that required coverage under this permit have ceased. The NOT shall be submitted consistent with all of the following:

2.7.1 The permittee shall submit the NOT on the electronic form available from the department.

Note: Electronic forms are available at https://dnr.wisconsin.gov/topic/Stormwater/construction/forms.html. For applicants with no computer capability, the department may accept a paper version of the NOT on a case-by-case basis. The paper form must be obtained directly by contacting the department at 888-936-7463 or by writing to the Wisconsin DNR, Storm Water Program - WT/3, Box 7921, Madison, Wisconsin 53707-7921. Submittal of the paper form must be accompanied by a letter from the department approving its use.

2.7.2 The Permittee shall sign the NOT form in accordance with s. NR 216.43(3), Wis. Adm. Code.

2.7.3 The department shall use the information submitted with the NOT as basis for confirming or denying termination of coverage.

2.7.4 The department shall provide written confirmation of permit coverage termination to the permittee. Termination of coverage shall not be effective until the department provides confirmation to the permittee.

2.8 Permit Coverage Renewal and Automatic Termination

The maximum period of permit coverage for any project is limited to three years per NOI. After three years of initial permit coverage, the permittee is no longer authorized to discharge under this permit unless renewal of coverage is granted by the department. A permittee may request renewal of coverage under this permit or a reissued version of this permit by submitting an electronic form to the department and paying the application fee for the total area of project disturbance. Reapplication for coverage must occur prior to the end of the three-year period. Unless a permittee renews permit coverage, the department may automatically terminate the initial permit coverage after three years. The permittee is responsible for determining whether a renewal of permit coverage is necessary.

2.9 Minimum Control Requirements

The permittee shall design, install, and maintain BMPs to meet the applicable performance standard in either s. NR 151.11, Wis. Adm. Code, for construction sites that are not transportation facilities or s. NR 151.23, Wis. Adm. Code, for transportation facility construction sites.

2.9.1 Evaluation and implementation of BMPs

The permittee shall utilize the following BMPs:

2.9.1.1 Limiting the size and duration of exposed soil areas subject to erosion via staging of land disturbance. This includes temporary stabilization of areas that will not be subject to further land disturbance during winter months.

2.9.1.2 Develop a spill prevention and response plan.

2.9.1.3 Encourage infiltration through maintaining natural buffers around surface waters and directing storm water to vegetated areas.

2.9.1.4 Utilizing BMPs for which the department has developed technical standards or equivalent methodology.

Note: The storm water technical standards are available on the department's internet site at: https://dnr.wi.gov/topic/stormwater/standards/.

2.9.2 BMP Design

The permittee shall consider all of the following factors when designing BMPs:

2.9.2.1 The expected amount, frequency, intensity, and duration of precipitation.

2.9.2.2 The nature of storm water runoff and run-on at the site. Factors such as expected flow from impervious surfaces, slopes, and site drainage features shall be considered. Best Management Practices shall be designed to meet the applicable requirements for erosion and sediment control and post- construction storm water management.

2.9.2.3 The soil type and range of soil particle sizes expected to be present on the site.

2.9.2.4 Both existing and proposed topography.

Note: Clearing, grubbing, and topsoil stripping are types of land disturbance that usually occur before mass grading. Therefore, temporary controls are needed for features that are present in existing topography that may not be present in proposed topography.

2.9.2.5 The proposed construction schedule, if known.

2.9.2.6 Good engineering design practices, including use of applicable technical standards or their or equivalent methodology.

2.9.3 Installation of BMPs

The permittee shall install the following by the time each phase of construction activities has begun:

2.9.3.1 Before land disturbing construction activities in any portion of the site begins, install and direct water to any erosion or sediment controls that prevent or treat discharges from the initial site clearing, grading, excavating, and other land disturbing construction activities.

Note: The requirement to install BMPs prior to each phase of construction activities for the site does not apply to the land disturbance associated with the actual installation of these BMPs. The permittee shall take all reasonable actions to minimize the discharges of pollutants during the installation of storm water BMPs.

2.9.3.2 Following the installation of these initial controls, install and direct water to all BMPs needed to control discharges prior to subsequent land disturbing activities.

2.9.4 Maintenance of BMPs

The permittee shall ensure that all BMPs are maintained and remain effective operating condition during permit coverage and are protected from activities that would reduce their effectiveness. The permittee shall:

2.9.4.1 Follow any specific maintenance requirements for the BMPs used to comply with this permit.

2.9.4.2 Initiate any needed maintenance work so that it is completed by the close of the next business day. The permittee shall repair or replace storm water BMPs as necessary within 24 hours of an inspection performed in accordance with section 4.5 of this permit or after notification by the department that repair or replacement is needed.

Note: A permittee's operator may assist a permittee to comply with these provisions where the operator has a contract or other agreement with the permittee to meet these requirements.

2.9.5 Corrective Actions

If a selected BMP is ineffective in meeting the requirements of this permit, the permittee shall comply with the corrective action requirements in section 3.3.

2.9.6 Compliance with Runoff Management Performance Standards

The permittee shall comply with the construction site performance standards in s. NR 151.11(6m),

(7) and (8), Wis. Adm. Code, for construction sites that are not transportation facilities or s. NR 151.23(4m),(5) and (6), Wis. Adm. Code, for transportation facility construction sites. The BMPs installed to meet the performance standards shall be maintained to meet the control and/or treatment capability of the practice. In accordance with section 3.2.6 of this permit, the permittee shall ensure that any permanent structures installed to meet a post- construction performance standard in ss. NR

151.121 to 151.128, Wis. Adm. Code, or ss. NR 151.241 to 151.248, Wis. Adm. Code, are maintained to meet the treatment capability as designed.

2.9.7 Unauthorized Discharges

This permit authorizes storm water discharges from land disturbing construction activities that may become mixed with other storm water discharges. Other storm water or wastewater discharges that require coverage under another general or individual WPDES permit are not

authorized under this permit such as wastewater discharges from washout and cleanout of concrete, paint, form release oils, curing compounds and other construction materials; fuels, oils and other pollutants used in vehicle operation and maintenance; and soaps or solvents used in vehicle and/or equipment washing.

4. WATER QUALITY STANDARDS, MONITORING, AND RECORDS

4.1 Water Quality Standards

This permit specifies the conditions under which storm water may be discharged to waters of the state for the purpose of achieving water quality standards contained in chs. NR 102 through 105, NR 140, and NR 207, Wis. Adm. Code. For the term of this permit, compliance with water quality standards will be addressed by adherence to general narrative-type storm water discharge limitations, compliance with the applicable performance standards of subch. III or IV of ch. NR 151, Wis. Adm. Code, and implementation of the erosion control and storm water management plans and BMPs. A permittee with a construction site covered under this permit shall select, install, implement and maintain BMPs as necessary to meet applicable water quality standards. Unless notified by the department in writing to the contrary, compliance with the applicable performance standards of subch. III or IV of ch. NR 151, Wis. Adm. Code, shall be deemed as stringent as those water discharges covered by this permit do not cause or contribute to an excursion above any applicable water quality standard.

4.2 Outstanding and Exceptional Resource Waters

4.2.1 Before beginning land-disturbing construction activity, the permittee shall determine whether any part of its construction or post-construction site storm water will discharge to an outstanding resource water (ORW) or exceptional resource water (ERW). ORWs and ERWs are listed in ss. NR 102.10 and 102.11, Wis. Adm. Code, respectively.

Note: The department recommends that an applicant for permit coverage check for ORWs and ERWs during project planning prior to submitting an NOI. A list of ORWs and ERWs may be found on the department's internet site at: https://dnr.wi.gov/topic/surfacewater/orwerw.html.

4.2.2 The permittee may not establish a new storm water discharge of pollutants directly to an ORW or an ERW unless the discharge of pollutants is equal to or less than existing levels of pollutants immediately upstream of the discharge site. The erosion control and storm water management plans required under section 3 of this permit shall include BMPs designed to meet this requirement for a new storm water discharge.

4.2.2.1 "New storm water discharge" means a storm water discharge that would first occur after the permittee's start date of coverage under this permit to a surface water to which the construction site or post-construction site did not previously discharge storm water.

4.2.3 The permittee's erosion control and storm water management plans required under this permit shall be designed to prevent the discharge of sediment and other pollutants to any ORW or ERW in excess of the background level within the water body. Unless notified by the department in writing to the contrary, compliance with the applicable performance standards of subch. III or IV of ch. NR 151, Wis. Adm. Code, shall be deemed in compliance with the requirements of this section. If the department has sufficient site-specific data to determine that the permittee's construction or post-construction site storm water will discharge a pollutant in excess of the background level within an ORW or ERW, then the department shall notify the permittee in writing that the permittee shall include a written section in the erosion control and storm water management plan that discusses and identifies the management practices and control measures the permittee will implement to prevent the discharge of any pollutant in excess of the background level within the water body. This section of the permittee's plans shall specifically identify control measures and practices that will collectively be used to prevent the discharge of a pollutant in excess of the background level within the water body.

Note: Reducing or eliminating surface water discharges to an ORW or ERW by infiltrating runoff is a method to help prevent the discharge of pollutants to an ORW or ERW in excess of background levels. It is expected that post-construction storm water management practices will be designed to maintain or increase infiltration rates for the site as compared to pre-development infiltration rates for areas that discharge to any ORW or ERW. However, prohibitions, exclusions, or exemptions from infiltrating runoff may apply to runoff from potential sources of contamination or into areas that are prone to groundwater contamination as identified in s. NR 151.12(5)(c)5. and 6., Wis. Adm. Code, or s. NR 151.124(3) and (4), Wis. Adm. Code.

Infiltration systems shall be designed to comply with the groundwater quality standards contained in ch. NR 140, Wis. Adm. Code.

4.2.4 Protective areas of at least 75 feet shall be maintained adjacent to any ORW and ERW as required under ss. NR 151.12 (5)(d), NR 151.125, 151.24(6), or NR 151.245, Wis. Adm. Code.

4.3 Fish and Aquatic Life Waters

4.3.1 Before beginning land-disturbing construction activity, the permittee shall determine if the site will have a storm water discharge to a fish and aquatic life water as defined in s. NR 102.13, Wis. Adm. Code.

Note: The department recommends that an applicant check for fish and aquatic life waters during project planning prior to submitting an NOI. Most receiving waters of the state are classified as a fish and aquatic life water and this classification includes all surface waters of the state except ORWs, ERWs, Great Lakes system waters and variance water identified within ss. NR 104.05 to 104.10, Wis. Adm. Code. The department may be consulted if the applicant is not certain of the classification.

4.3.2 The permittee may not establish a new storm water discharge of pollutants to a fish and aquatic life water if the discharge will result in the significant lowering of water quality of the fish and aquatic life water. Significant lowering of water quality is defined within ch. NR 207, Wis. Adm. Code. If discharges result in the significant lowering of water quality, the procedures of s. NR 207.04 (c) 1., Wis. Adm. Code may apply, and the permittee shall include this as additional information pursuant to s. NR 216.48 (3), Wis. Adm. Code. Unless notified by the department in writing to the contrary, compliance with the applicable performance standards of subch. III or IV of ch. NR 151, Wis. Adm. Code, shall be deemed in compliance with the requirements of this section. "New storm water discharge" has the meaning given in section 4.2.2.1 of this permit.

4.4 Impaired Water Bodies and Total Maximum Daily Load Requirements

4.4.1 "Pollutant(s) of concern" means a pollutant that is contributing to the impairment of a water body.

4.4.2 Before beginning land-disturbing construction activity, the permittee shall determine whether any part of its construction or post-construction site storm water will discharge to an impaired water body listed in accordance with Section 303(d)(1) of the federal Clean Water Act, 33 USC §1313(d)(1)(C), and the implementing regulation of the US Environmental Protection Agency, 40 CFR §130.7(c)(1). Impaired waters are those that are not meeting applicable water quality standards.

Note: The list of Wisconsin impaired surface water bodies may be obtained by contacting the department or by searching for keyword "impaired waters" on the department's internet site.

The department updates the list approximately every two years. The updated list is effective upon

approval by the USEPA. The current list may be found on the department's Internet site at: https://dnr.wisconsin.gov/topic/SurfaceWater/ConditionLists.html.

4.4.3 A permittee that will discharge a pollutant of concern via storm water to an impaired water body shall include a written section in the erosion control and storm water management plans that specifically identifies control measures and management practices that will collectively be used to reduce, with the goal of eliminating, the storm water discharge of pollutant(s) of concern that contribute to the impairment of the water body and explain why these control measures and management practices were chosen as opposed to other alternatives. Unless notified by the department in writing to the contrary, compliance with the applicable performance standards of subch. III or IV of ch. NR 151, Wis. Adm. Code, shall be deemed to be compliance with the requirements of this section.

4.4.4 The permittee may not establish a new storm water discharge of a pollutant of concern to an impaired water body or increase an existing discharge of a pollutant of concern to an impaired water body unless the new or increased discharge causes the receiving water to meet applicable water quality standards, or the discharge is consistent with a USEPA approved total maximum daily load (TMDL) allocation for the impaired water body. Unless notified by the department in writing to the contrary, compliance with the applicable performance standards of subch. III or IV of ch. NR 151, Wis. Adm. Code, shall be deemed to be compliance with the requirements of this section. "New storm water discharge" has the meaning given in section 4.2.2.1 of this permit.

4.4.5 Before beginning land-disturbing construction activity, the permittee shall determine whether any part of its construction or post-construction site storm water will discharge a pollutant of concern via storm water to a water body included in a State and Federal approved TMDL. If so, the permittee shall assess whether the TMDL wasteload allocation for the facility's discharge will be met through the existing erosion control and storm water management plans and compliance with the applicable performance standards of subch. III or IV of ch. NR 151, Wis. Adm. Code, or whether changes to the plans are necessary.

Note: The department recommends that an applicant for permit coverage check for approved TMDLs during project planning prior to submitting an NOI. State and Federal approved TMDLs can be identified by contacting the department, or by searching for keyword "TMDL" on the department's internet site at dnr.wi.gov. The current State and Federal approved Final TMDLs may be found on the department's internet site at: https://dnr.wisconsin.gov/topic/TMDLs.

4.4.6 After determining whether the construction or post-construction site storm water discharge is included in a USEPA approved TMDL and determining that any TMDL wasteload allocation for the construction or post-construction site's discharge is not being met, the permittee shall amend the erosion control and storm water management plans. The amended plans shall include the necessary control measures to meet the requirements of the USEPA approved TMDL wasteload allocation for the construction or post-construction site. If a specific wasteload allocation has not been assigned to the construction or post-construction site under a TMDL, compliance with the applicable performance standards of subch. III or IV of ch. NR 151, Wis. Adm. Code, and this permit shall be deemed to be compliance with the TMDL.

4.5 Inspections and Maintenance

The permittee shall:

4.5.1 Conduct the following construction site inspections:

4.5.1.1 Weekly inspections of erosion and sediment control BMPs; and

4.5.1.2 Inspections of erosion and sediment control BMPs within 24 hours after a rainfall event of 0.5 inches or greater. A "rainfall event" may be considered to be the total amount of rainfall recorded in any continuous 24-hour period.

Note: More frequent visual monitoring is recommended for activities such as dewatering and trackout.

4.5.2 Repair or replace erosion and sediment control BMPs as necessary within 24 hours of an inspection or notification indicating that repair or replacement is needed.

4.5.3 Maintain, at the construction site or via an internet site, weekly written reports of all inspections conducted by or for the permittee. If an internet site method is used, the landowner shall provide the internet address to the department prior to its use. Weekly inspection reports shall include all of the following:

4.5.3.1 The date, time and exact location of the inspection.

4.5.3.2 The name of the individual who performed the inspection.

4.5.3.3 An assessment of the condition of erosion and sediment control BMPs.

4.5.3.4 A description of any erosion and sediment control installation or maintenance performed in response to the inspection.

4.5.3.5 A description of the present phase of construction at the site and any schedule modifications that may increase sediment discharge.

Note: The department has developed an inspection report form that includes the above items and it is available through the department's storm water Internet site at: https://dnr.wisconsin.gov/topic/Stormwater/construction/forms.html.

4.5.4 Submit the information maintained in accordance with section 4.5.3 to the department upon request.

4.6 Records

4.6.1 The permittee shall retain records of all construction site inspections, copies of all reports and plans required by this permit, and records of all data used to obtain coverage under this permit. Minimum periods of retention are as follows:

4.6.1.1 If there is a secure location, such as a construction site trailer, the erosion control and storm water management plans and amendments to the erosion control and storm water management plans shall be retained at the construction site until permit coverage is terminated.

4.6.1.2 All reports required by subch. III of ch. NR 216, Wis. Adm. Code, or information submitted to obtain coverage under this permit, including the erosion control and storm water management plans, amendments, and background information used in their preparation, shall be kept by the permittee for a period of at least 3 years from the date of termination of permit coverage.

4.6.2 A landowner operating a construction site under approved municipal erosion and sediment plans, grading plans, or storm water management plans shall also submit signed copies of the NOI to the local agency approving the plans. If storm water from the construction site discharges to a municipal separate storm sewer system that is operating pursuant to a municipal storm water discharge permit issued pursuant to subch. I of ch. NR 216, Wis. Adm. Code, then a signed copy of the NOI shall also be sent to the operator of the system.

4.6.3 Upon request by the department the permittee shall provide a copy of the erosion control and storm water management plans, construction site inspections and any additional data requested, within 5 working days to the department, to the operator of the municipal storm sewer system that receives the discharge, and any municipal agency approving erosion and sediment plans, grading plans or storm water management plans. Additional information may be requested by the department for resource waters that require additional protection such as outstanding or exceptional resource waters, or other sensitive water resources.

4.7 Compliance with Other Applicable Regulations

4.7.1 The erosion control and storm water management plans shall document other applicable municipal regulatory provisions, compliance with which will also meet the requirements of this permit. Subject to the requirements for uniform statewide standards established by the department under s. 281.33(3), Wis. Stats., if these municipal provisions are more stringent than those provisions appearing in this permit issued pursuant to subch. III of ch. NR 216, Wis. Adm. Code, the erosion control and storm water management plans shall also include a description of how compliance with the municipal provisions will be achieved.

4.7.2 The erosion control and storm water management plans shall comply with applicable state plumbing regulations.

4.8 Department Actions

4.8.1 The department may notify the permittee at any time that the erosion control and storm water management plans do not meet one or more of the minimum requirements of subch. III of ch. NR 216, Wis. Adm. Code, or this permit, for reducing and preventing the discharge of pollutants. The notification shall identify those provisions that are not being met by the erosion control and storm water management plan and identify which provisions of the plan require modification in order to meet the requirements. Within the time frame identified by the department in its notification, the permittee shall make the required changes to the erosion control and storm water management plans, perform all actions required by the revised plans, and submit to the department a written certification that the requested changes have been made and implemented, and such other information the department requires. The department may revoke coverage under this permit for failure to comply with this section or it may take action under s. 283.89, Wis. Stats., or both. The landowner of a construction site where the department has revoked coverage under this permit may not discharge storm water to waters of the state from the construction site unless an individual WPDES permit for storm water discharge is issued to the landowner.

4.8.2 The department shall withdraw a construction site from coverage under this permit and issue an individual WPDES permit upon written request of the discharger. This permit authorizing storm water discharges from the construction site remains in effect until the department acts on such a request and issues a specific individual WPDES permit.

4.8.3 The department may deny coverage under this permit and require submittal of an application for an individual WPDES storm water discharge permit based on a review of the completed NOI or other relevant information. The landowner of a construction site denied or revoked coverage under this permit may not discharge storm water to waters of the state from the construction site until an individual WPDES permit for storm water discharge is issued to the landowner.

4.8.4 The department may require the landowner of any storm water discharge covered by this permit, to apply for and obtain an individual WPDES storm water discharge permit if any of the following occur:

4.8.4.1 The storm water discharge is determined to be a significant source of pollution and more appropriately regulated by an individual WPDES storm water discharge permit.

4.8.4.2 The storm water discharge is not in compliance with the terms and conditions of subch. III of ch. NR 216, Wis. Adm. Code, or of this permit.

4.8.4.3 A change occurs in the availability of demonstrated technology or BMPs for the control or abatement of pollutants from the storm water discharge.

4.8.4.4 Effluent limitations or standards are promulgated for a storm water discharge that is different than the conditions contained in subch. III of ch. NR 216, Wis. Adm. Code.

4.8.5 Any person may submit a written request to the department that it take action under section 4.8.4 above.

SITE LOCATION MAP

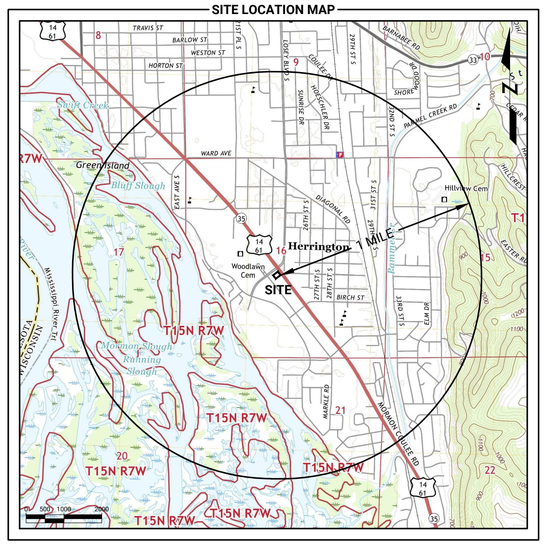

CONTOUR CIVIL DESIGN
P.O. BOX 89, ROCKFORD, MINNESOTA 55373
TEL: 612.730.2265 | WWW.CONTOURCD.COM

I HEREBY CERTIFY THAT THIS PLAN, SPECIFICATION OR REPORT WAS PREPARED BY ME OR UNDER MY DIRECT SUPERVISION AND THAT I AM A DULY LICENSED PROFESSIONAL ENGINEER UNDER THE LAWS OF THE STATE OF WISCONSIN

NAME: JOSEPH T RADACH PE

SIGNATURE: Joe T. R

DATE: 01/09/26 LIC #: E-43913

REVISIONS	ISSUE DATE: 01/09/26	BY: JTR
1.		
2.		
3.		
4.		
5.		
6.		
7.		

OWNER

ALLIANCE DEVELOPMENT
230 Ohio Street, Suite 200
Oshkosh, WI 54902

SWPPP NARRATIVE

CHIPOTLE RESTAURANT
Mormon Coulee Road & Losey Blvd S
La Crosse, WI 54601

SHEET NUMBER

C5.3

01/09/26 C:\users\contour civil\dropbox\pc\desktop\contour_jobs\25019 - chipotle la crosse\cad\25015_swppp.dwg

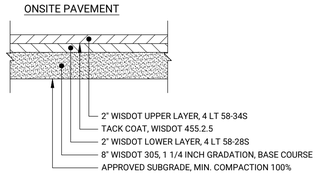

NOTES

1. FINAL PAVEMENT SECTIONS AND SUBGRADE COMPACTION REQUIREMENTS TO BE CONFIRMED BY GEOTECHNICAL ENGINEER OF RECORD

1 FLEXIBLE PAVEMENT SECTIONS

NO SCALE

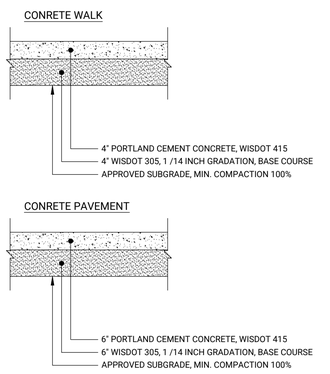

NOTES

1. FINAL PAVEMENT SECTIONS AND SUBGRADE COMPACTION REQUIREMENTS TO BE CONFIRMED BY GEOTECHNICAL ENGINEER OF RECORD

2 RIGID PAVEMENT SECTIONS

NO SCALE

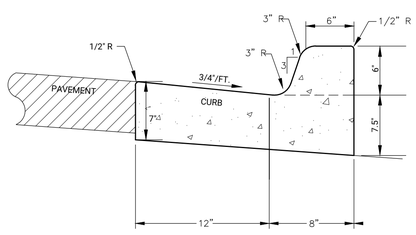

NOTES:

1. TIPOUT CURB SHALL SLOPE OUT AT 3/4" PER FOOT.
2. WHERE CURB MEETS CONCRETE PAVEMENT, INSTALL 24" NO.4 DOWELS SPACED 36" ON CENTER.

3 CONCRETE CURB & GUTTER

NO SCALE

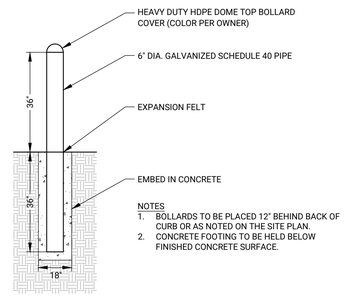

NOTES

1. BOLLARDS TO BE PLACED 12" BEHIND BACK OF CURB OR AS NOTED ON THE SITE PLAN.
2. CONCRETE FOOTING TO BE HELD BELOW FINISHED CONCRETE SURFACE.

4 6" CONCRETE FILLED PIPE BOLLARD

NO SCALE

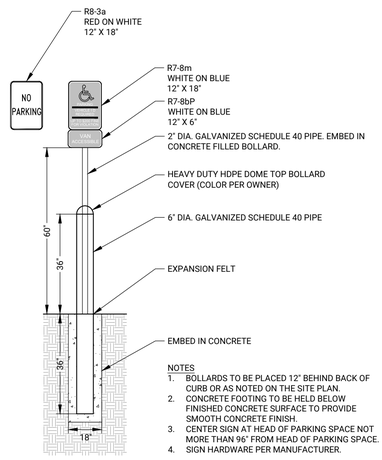

NOTES

1. BOLLARDS TO BE PLACED 12" BEHIND BACK OF CURB OR AS NOTED ON THE SITE PLAN.
2. CONCRETE FOOTING TO BE HELD BELOW FINISHED CONCRETE SURFACE TO PROVIDE SMOOTH CONCRETE FINISH.
3. CENTER SIGN AT HEAD OF PARKING SPACE NOT MORE THAN 96" FROM HEAD OF PARKING SPACE.
4. SIGN HARDWARE PER MANUFACTURER.

5 6" CONCRETE FILLED PIPE BOLLARD W/SIGN

NO SCALE

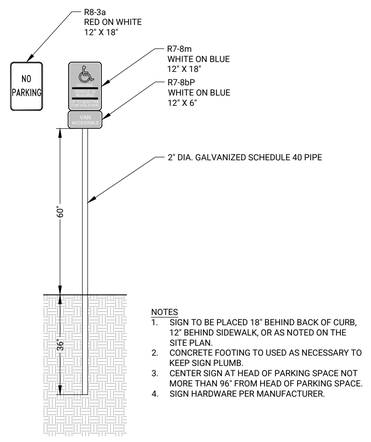

NOTES

1. SIGN TO BE PLACED 18" BEHIND BACK OF CURB, 12" BEHIND SIDEWALK, OR AS NOTED ON THE SITE PLAN.
2. CONCRETE FOOTING TO USED AS NECESSARY TO KEEP SIGN PLUMB.
3. CENTER SIGN AT HEAD OF PARKING SPACE NOT MORE THAN 96" FROM HEAD OF PARKING SPACE.
4. SIGN HARDWARE PER MANUFACTURER.

6 HANDICAP PARKING SIGN

NO SCALE

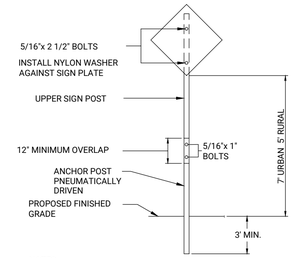

NOTES:

1. MATERIALS AND INSTALLATION SHALL BE IN ACCORDANCE WITH CITY SPECIFICATIONS.
2. SIGN PANELS-REFLECTIVE SHEETING, VIP DIAMOND GRADE.
3. BOLTS SHALL BE TAMPER PROOF.
4. FLANGED CHANNEL SIGN POSTS SHALL BE PAINTED GREEN, 3 LB./L.F. AND 7' LONG.
5. SIGNS INSTALLED IN CONCRETE SHALL HAVE AN APPROVED BREAK-AWAY DEVICE.
6. EDGE OF SIGN SHALL BE MINIMUM 18" FROM BACK OF CURB.

7 TYPICAL SIGN

NO SCALE

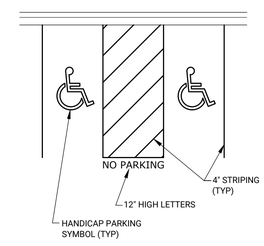

8 HANDICAP PARKING SPACE PAVEMENT MARKINGS

NO SCALE

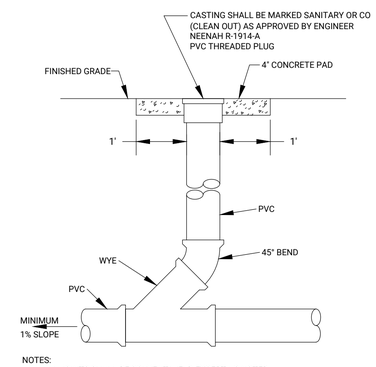

NOTES:

- ALL JOINTS SHALL BE SOLVENT WELD EXCEPT AS NOTED.
- CLEAN OUTS ARE REQUIRED AT 100' SPACING AND AT CHANGE OF DIRECTION.
- ALL CLEAN OUTS SHALL BE EQUIPPED WITH A FROST SLEEVE.

9 CLEANOUT

NO SCALE

NOTES:

1. 54" THRU 120" DIA. STRUCTURES ARE MANUFACTURED WITH BELL END FACING DOWN.
2. STRUCTURES ARE MANUFACTURED IN ACCORDANCE WITH ASTM C-478 AND WIDOT 611 WITH RUBBER GASKET JOINTS.
3. PROVIDE MORTAR FILLETS TO FIT THE BOTTOM PORTION OF PIPE TO DIRECT FLOW TO OUTLET HALF-WAY UP PIPE MINIMUM.
4. COVER SLAB DESIGN VARIES WITH CASTING.
5. REINFORCING STEEL SHALL BE PER ASTM C-478 AND WIDOT 611.

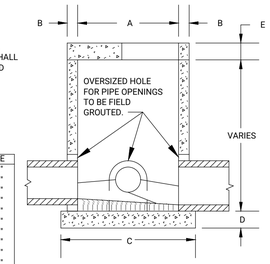

A	B	C	D	E
48"	5"	64"	8"	8"
54"	5.5"	72"	8"	8"
60"	6"	78"	8"	8"
66"	6.5"	85"	8"	8"
72"	7"	92"	8"	8"
78"	7.5"	100"	8"	8"
84"	8"	106"	8"	8"
90"	8.5"	114"	8"	8"
96"	9"	120"	8"	8"
102"	9.5"	127"	12"	8"
108"	10"	132"	12"	12"
120"	10"	146"	12"	12"

10 CATCH BASIN MANHOLE

NO SCALE

STABILIZE ALL EXPOSED SOIL AREAS, INCLUDING STOCKPILES. STABILIZATION MUST BE INITIATED IMMEDIATELY TO LIMIT SOIL EROSION WHEN CONSTRUCTION ACTIVITY HAS PERMANENTLY OR TEMPORARILY CEASED ON ANY PORTION OF THE SITE AND WILL NOT RESUME FOR A PERIOD EXCEEDING 14 CALENDAR DAYS. STABILIZATION MUST BE COMPLETED NO LATER THAN 14 CALENDAR DAYS AFTER THE CONSTRUCTION ACTIVITY HAS CEASED. STABILIZATION IS NOT REQUIRED ON CONSTRUCTED BASE COMPONENTS OF ROADS, PARKING LOTS AND SIMILAR SURFACES. STABILIZATION IS NOT REQUIRED ON TEMPORARY STOCKPILES WITHOUT SIGNIFICANT SILT, CLAY OR ORGANIC COMPONENTS (E.G., CLEAN AGGREGATE STOCKPILES, DEMOLITION CONCRETE STOCKPILES, SAND STOCKPILES) BUT PERMITTEES MUST PROVIDE SEDIMENT CONTROLS AT THE BASE OF THE STOCKPILE.

TEMPORARY SEEDING SHALL BE IN ACCORDANCE WITH WISDOT 630 AND SHALL BE AS FOLLOWS:

SEED: WIDOT MIX 10 AT 1.5 POUNDS PER 1,000 SF
MULCH: TYPE 1 AT 2 TONS PER ACRE
FERTILIZER: 10-10-10 AT 200 LBS PER ACRE

PERMANENT SEEDING SHALL BE IN ACCORDANCE WITH THE LANDSCAPE PLAN

11 NOT USED

NO SCALE

12 NOT USED

NO SCALE

CONTOUR CIVIL DESIGN
P.O. BOX 89, ROCKFORD, MINNESOTA 55373
TEL: 612.730.2265 | WWW.CONTOURCD.COM

I HEREBY CERTIFY THAT THIS PLAN, SPECIFICATION OR REPORT WAS PREPARED BY ME OR UNDER MY DIRECT SUPERVISION AND THAT I AM A DULY LICENSED PROFESSIONAL ENGINEER UNDER THE LAWS OF THE STATE OF WISCONSIN

NAME: JOSEPH T RADACH PE
SIGNATURE:
DATE: 01/09/26 LIC #: E-43913

REVISIONS | ISSUE DATE: 01/09/26 | BY: JTR
1.
2.
3.
4.
5.
6.
7.

OWNER
ALLIANCE DEVELOPMENT
230 Ohio Street, Suite 200
Oshkosh, WI 54902

DETAILS

CHIPOTLE RESTAURANT
Mormon Coulee Road & Losey Blvd S
La Crosse, WI 54601

SHEET NUMBER
C6.1

01/09/26 c:\users\contour civil\dropbox\pc\desktop\contour_jobs\25019 - chipotle la crosse\cad\25019_details.dwg

SDD 08E09 Silt Fence

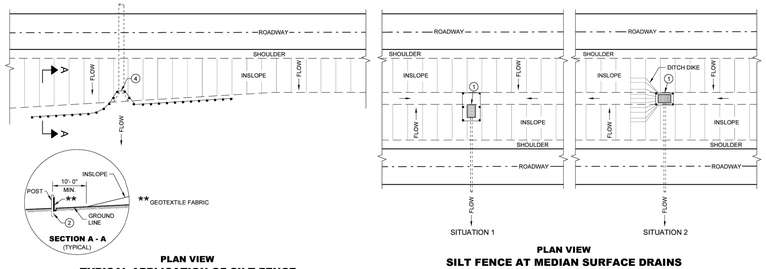

PLAN VIEW
TYPICAL APPLICATION OF SILT FENCE

PLAN VIEW
SILT FENCE AT MEDIAN SURFACE DRAINS

GENERAL NOTES

DETAILS OF CONSTRUCTION NOT SHOWN ON THIS DRAWING SHALL CONFORM TO THE PERTINENT REQUIREMENTS OF THE STANDARD SPECIFICATIONS AND APPLICABLE SPECIAL PROVISIONS.

1. HORIZONTAL BRACE REQUIRED WITH 2" X 4" WOODEN FRAME OR EQUIVALENT AT TOP OF POSTS.
2. FOR MANUAL INSTALLATIONS THE TRENCH SHALL BE A MINIMUM OF 4" WIDE AND 6" DEEP TO BURY AND ANCHOR THE GEOTEXTILE FABRIC. FOLD MATERIAL TO FIT TRENCH AND BACKFILL AND COMPACT TRENCH WITH EXCAVATED SOIL.
3. WOOD POSTS SHALL BE A MINIMUM SIZE OF 1 1/2" X 1 1/2" OF OAK OR HICKORY.
4. SILT FENCE TO EXTEND ACROSS THE TOP OF THE PIPE.
5. CONSTRUCT SILT FENCE FROM A CONTINUOUS ROLL IF POSSIBLE BY CUTTING LENGTHS TO AVOID JOINTS. IF A JOINT IS NECESSARY USE ONE OF THE FOLLOWING TWO METHODS: A) OVERLAP THE END POSTS AND TWIST, OR ROTATE, AT LEAST 180 DEGREES, B) HOOK THE END OF EACH SILT FENCE LENGTH.

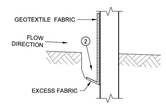

TRENCH DETAIL

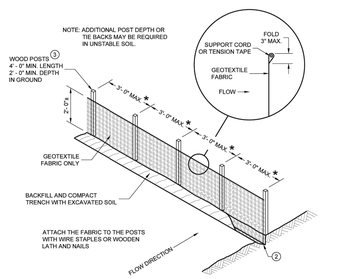

* NOTE: 8' - 0" SPACING ALLOWED IF A WOVEN GEOTEXTILE FABRIC IS USED.

SILT FENCE

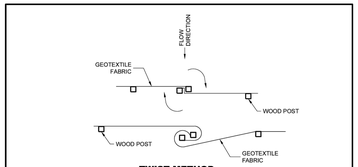

JOINING TWO LENGTHS OF SILT FENCE (5)

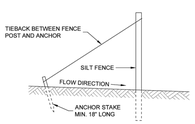

SILT FENCE TIE BACK
(WHEN REQUIRED BY THE ENGINEER)

SILT FENCE
STATE OF WISCONSIN
DEPARTMENT OF TRANSPORTATION
APPROVED 4/29/05 (DATE) /S/ Beth Cannestra (FHWA) CHIEF ROADWAY DEVELOPMENT ENGINEER

SDD 08E09 - 06

SDD 08E10 Inlet Protection, Types A, B, C and D

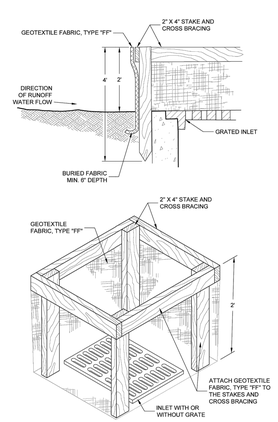

INLET PROTECTION, TYPE "A"

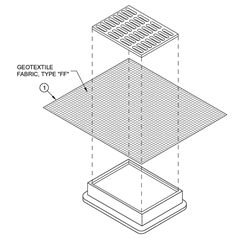

INLET PROTECTION, TYPE "B"
(WITHOUT CURB BOX)
(CAN BE INSTALLED IN ANY INLET WITHOUT A CURB BOX)

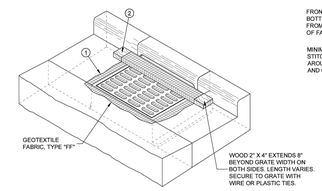

INLET PROTECTION, TYPE "C"
(WITH CURB BOX)

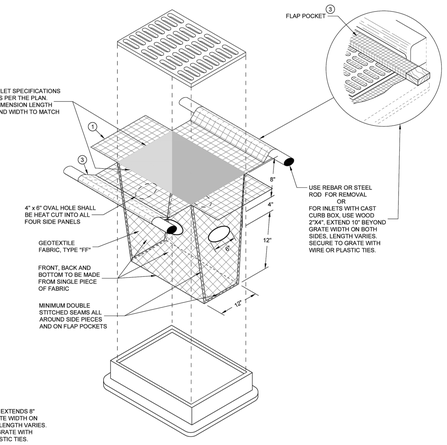

INLET PROTECTION, TYPE "D"
(CAN BE INSTALLED IN ANY INLET WITH OR WITHOUTA CURB BOX AS PER NOTE (2))

GENERAL NOTES

INLET PROTECTION DEVICES SHALL BE MAINTAINED OR REPLACED AT THE DIRECTION OF THE ENGINEER.

MANUFACTURED ALTERNATIVES APPROVED AND LISTED ON THE DEPARTMENT'S EROSION CONTROL PRODUCT ACCEPTABILITY LIST MAY BE SUBSTITUTED.

WHEN REMOVING OR MAINTAINING INLET PROTECTION, CARE SHALL BE TAKEN SO THAT THE SEDIMENT TRAPPED ON THE GEOTEXTILE FABRIC DOES NOT FALL INTO THE INLET. ANY MATERIAL FALLING INTO THE INLET SHALL BE REMOVED IMMEDIATELY.

1. FINISHED SIZE, INCLUDING FLAP POCKETS WHERE REQUIRED, SHALL EXTEND A MINIMUM OF 10" AROUND THE PERIMETER TO FACILITATE MAINTENANCE OR REMOVAL.
2. FOR INLET PROTECTION, TYPE C (WITH CURB BOX), AN ADDITIONAL 18" OF FABRIC IS WRAPPED AROUND THE WOOD AND SECURED WITH STAPLES. THE WOOD SHALL NOT BLOCK THE ENTIRE HEIGHT OF THE CURB BOX OPENING.
3. FLAP POCKETS SHALL BE LARGE ENOUGH TO ACCEPT WOOD 2X4.

INSTALLATION NOTES

TYPES B & C

TRIM EXCESS FABRIC IN THE FLOW LINE TO WITHIN 3" OF THE GRATE.

THE CONTRACTOR SHALL DEMONSTRATE A METHOD OF MAINTENANCE, USING A SEWN FLAP, HAND HOLDS OR OTHER METHOD TO PREVENT ACCUMULATED SEDIMENT FROM ENTERING THE INLET.

TYPE D

TRIM EXCESS FABRIC IN THE FLOW LINE TO WITHIN 3" OF THE GRATE.

DO NOT INSTALL INLET PROTECTION TYPE D IN INLETS SHALLOWER THAN 30", MEASURED FROM THE BOTTOM OF THE INLET TO THE TOP OF THE GRATE.

THE INSTALLED BAG SHALL HAVE A MINIMUM SIDE CLEARANCE, BETWEEN THE INLET WALLS AND THE BAG, MEASURED AT THE BOTTOM OF THE OVERFLOW HOLES, OF 3". WHERE NECESSARY THE CONTRACTOR SHALL CINCH THE BAG, USING PLASTIC ZIP TIES, TO ACHIEVE THE 3" CLEARANCE. THE TIES SHALL BE PLACED AT A MAXIMUM OF 4" FROM THE BOTTOM OF THE BAG.

INLET PROTECTION TYPES A, B, C AND D
STATE OF WISCONSIN
DEPARTMENT OF TRANSPORTATION
APPROVED 10/18/02 (DATE) /S/ Beth Cannestra (FHWA) ROADWAY STANDARDS DEVELOPMENT ENGINEER

SDD 08E10 - 02

SDD 08E14 Tracking Pad

GENERAL NOTES

DETAILS OF CONSTRUCTION, MATERIALS AND WORKMANSHIP NOT SHOWN ON THIS DRAWING SHALL CONFORM TO THE PERTINENT REQUIREMENTS OF THE STANDARD SPECIFICATIONS AND THE APPLICABLE SPECIAL PROVISIONS.

TRACKING PAD SHALL BE INSPECTED DAILY. DEFICIENT AREAS SHALL BE REPAIRED OR REPLACED IMMEDIATELY.

TRACKING PAD TO BE REMOVED AFTER CONSTRUCTION IS COMPLETED.

TRACKING PAD SHALL BE THE FULL WIDTH OF THE EGRESS POINT.

SURFACE WATER MUST BE PREVENTED FROM PASSING THROUGH THE TRACKING PAD. FLOWS SHALL BE DIVERTED AWAY, AROUND OR CONVEYED UNDER THE TRACKING PAD.

CULVERT PIPE OR OTHER BMP USED TO DIVERT WATER AWAY, AROUND OR UNDER THE TRACKING PAD SHALL BE DESIGNED TO CONVEY THE 2 YEAR - 24 HOUR EVENT.

THE COST OF ADDITIONAL BMP TO DIVERT WATER ARE INCIDENTAL TO THE TRACKING PAD BID ITEM.

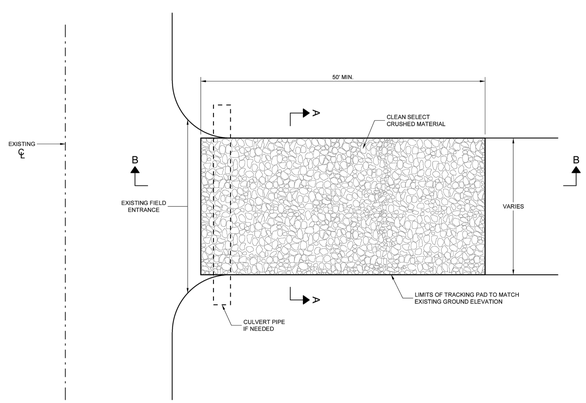

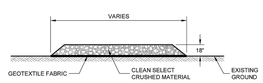

SECTION A - A

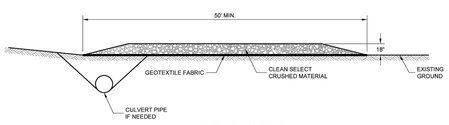

SECTION B - B

TRACKING PAD
STATE OF WISCONSIN
DEPARTMENT OF TRANSPORTATION
APPROVED 3/24/2011 (DATE) /S/ Jerry H. Zogg (FHWA) ROADWAY STANDARDS DEVELOPMENT ENGINEER

SDD 08E14 - 01

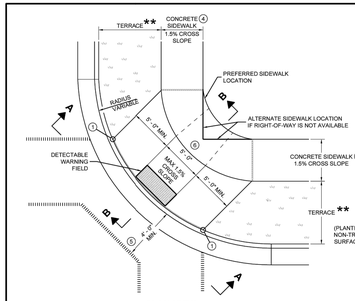

PLAN VIEW
CURB RAMP TYPE 1
(CENTER OF CORNER RADIUS)

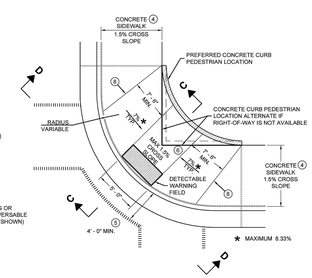

PLAN VIEW
CURB RAMP TYPE 1 - A
(NO TERRACE)

GENERAL NOTES

AVOID PLACING DRAINAGE STRUCTURES, JUNCTION BOXES OR OTHER OBSTRUCTIONS IN FRONT OF RAMP ACCESS AREAS.

DETAILS OF CONSTRUCTION, MATERIALS AND WORKMANSHIP NOT SHOWN ON THIS DRAWING SHALL CONFORM TO THE PERTINENT REQUIREMENTS OF THE STANDARD SPECIFICATIONS AND THE APPLICABLE SPECIAL PROVISIONS.

WHEN NECESSARY, THE SIDEWALK ELEVATION MAY BE LOWERED TO MEET THE HIGH POINT ON THE RAMP.

TYPE 1 CURB RAMPS SHALL HAVE A NORMAL SIDEWALK APRON AND CURB ON BOTH SIDES OF RAMP.

DETECTABLE WARNING FILED SHALL BE MEASURED AND PAID BY THE SQUARE FOOT AS "CURB RAMP DETECTABLE WARNING FIELD". THE CONCRETE PEDESTRIAN CURB, IF NEEDED, SHALL BE MEASURED AND PAID BY THE LINEAR FOOT AS "CONCRETE CURB PEDESTRIAN". CONCRETE SIDEWALK IN THE CURB RAMP AREA SHALL BE MEASURED AND PAID BY THE SQUARE FOOT AS CONCRETE SIDEWALK, INCLUDING THE AREA UNDER THE DETECTABLE WARNING FIELD.

SELECT CURB RAMP DETECTABLE WARNING FIELD MATERIALS AND DEVICES FROM THE DEPARTMENT'S APPROVED MATERIALS LIST. THE COLOR OF THE DETECTABLE WARNING FIELD IS SPECIFIED ELSEWHERE AND IS INCIDENTAL TO THE BID ITEM OF "CURB RAMP DETECTABLE WARNING FIELD"

DETECTABLE WARNING FIELDS THAT ARE INSTALLED AS A GROUP OR SIDE BY SIDE, SHALL BE FROM THE SAME MANUFACTURER.

SURFACE TEXTURE OF THE RAMP SHALL BE OBTAINED BY COARSE BROOMING TRANSVERSE TO THE SLOPE OF THE RAMP.

1. THIS POINT IS AN EXTENSION OF OUTSIDE EDGE OF APPROACHING SIDEWALK WHERE IT MEETS THE BACK OF CONCRETE CURB. POINT LOCATION MAY BE ADJUSTED TO ALIGN WITH BEGINNING OF FULL-HEIGHT CURB IF THIS DISTANCE IS SHORT.
2. GRADE CHANGE BETWEEN GUTTER FLAG SLOPE AND THE CURB RAMP SLOPE SHALL NOT EXCEED 11%. MAXIMUM GUTTER FLAG SLOPE IS 4%. PROVIDE LONGITUDINAL DRAINAGE AROUND CURB AND AWAY FROM CURB RAMP. NO VERTICAL LIPS OR DISCONTINUITIES GREATER THAN 1/2 - INCH ARE ALLOWED. SLOPE OF CURB HEAD OPENING SHALL MATCH THE RAMP SLOPE, MINIMALLY 1.5% AND NOT TO EXCEED 7%. WHEN ADJACENT TO 1.5% LANDING, CONSTRUCT CURB HEAD OPENING AT 1.5% IN THE DIRECTION OF PEDESTRIAN TRAVEL.
3. MAXIMUM 8.33% CURB RAMP SLOPE IS ALLOWABLE WITH FLATTENED GUTTER FLAG SLOPE AND NOT TO EXCEED 11% GRADE CHANGE.
4. ±0.5% CONSTRUCTION TOLERANCE IN SIDEWALK CROSS SLOPE. THE SIDEWALK CROSS SLOPE SHALL NOT EXCEED 2% WITHOUT PRIOR APPROVAL FROM THE ENGINEER.
5. PROVIDE A LEVEL LANDING IN THE STREET AND GUTTER AREA (2% MAXIMUM SLOPE IN ANY DIRECTION). WHEN THE GUTTER SLOPE EXCEEDS 2%, CONSTRUCT THE LEVEL LANDING IN THE STREET AREA. 4 FOOT WIDTH IS MEASURED FROM THE FLANGE LINE
6. PROVIDE A LEVEL LANDING (MAXIMUM 2% SLOPE) IN ANY DIRECTION OF PEDESTRIAN TRAVEL. STANDARD LEVEL LANDING SIZE IS 5 FEET BY 5 FEET.
7. PROVIDE GRADE BREAK PERPENDICULAR TO DIRECTION OF WHEELCHAIR TRAVEL.

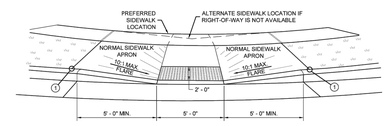

VIEW A - A FOR TYPE 1

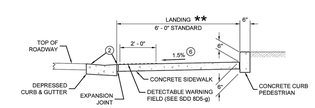

SECTION C - C FOR TYPE 1 - A

★★ WIDTH SHOWN ELSEWHERE IN THE PLANS

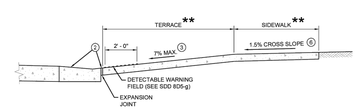

SECTION B - B FOR TYPE 1

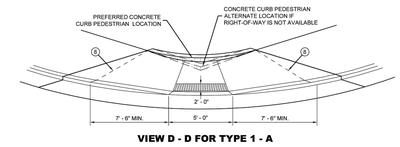

VIEW D - D FOR TYPE 1 - A

CURB RAMPS TYPE 1 AND 1-A
STATE OF WISCONSIN
DEPARTMENT OF TRANSPORTATION

SDD 08D05-21a

LEGEND

- X' EXPANSION JOINT SIDEWALK
- CONTRACTION JOINT FIELD LOCATED
- PAVEMENT MARKING CROSSWALK (WHITE)

CONTOUR CIVIL DESIGN
P.O. BOX 89, ROCKFORD, MINNESOTA 55373
TEL: 612.730.2265 | WWW.CONTOURCD.COM

I HEREBY CERTIFY THAT THIS PLAN, SPECIFICATION OR REPORT WAS PREPARED BY ME OR UNDER MY DIRECT SUPERVISION AND THAT I AM A DULY LICENSED PROFESSIONAL ENGINEER UNDER THE LAWS OF THE STATE OF WISCONSIN

NAME: JOSEPH T RADACH PE
SIGNATURE:
DATE: 01/09/26 LIC #: E-43913

REVISIONS	ISSUE DATE: 01/09/26	BY: JTR
1.		
2.		
3.		
4.		
5.		
6.		
7.		

OWNER
ALLIANCE DEVELOPMENT
230 Ohio Street, Suite 200
Oshkosh, WI 54902

DETAILS

CHIPOTLE RESTAURANT
Mormon Coulee Road & Losey Blvd S
La Crosse, WI 54601

SHEET NUMBER
C6.2

01/09/26 c:\users\contour civil\dropbox\pc\desktop\contour_jobs\23019 - chipotle la crosse\sdt\23019_details.dwg

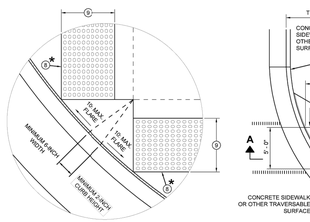

DETAIL A

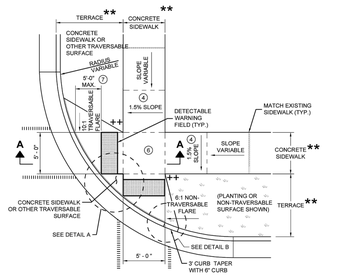

PLAN VIEW
CURB RAMP TYPE 2
(CENTER OF CORNER RADIUS)

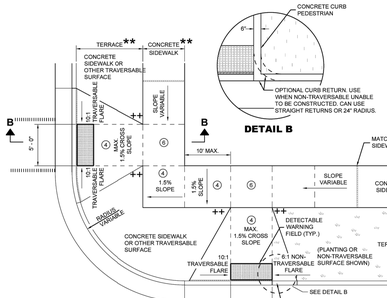

DETAIL B

PLAN VIEW
CURB RAMP TYPE 3
(OUTSIDE OF CROSSWALK AREA)

GENERAL NOTES

AVOID PLACING DRAINAGE STRUCTURES, JUNCTION BOXES OR OTHER OBSTRUCTIONS IN FRONT OF RAMP ACCESS AREAS.

DETAILS OF CONSTRUCTION, MATERIALS AND WORKMANSHIP NOT SHOWN ON THIS DRAWING SHALL CONFORM TO THE PERTINENT REQUIREMENTS OF THE STANDARD SPECIFICATIONS AND THE APPLICABLE SPECIAL PROVISIONS.

DETECTABLE WARNING FIELDS THAT ARE INSTALLED AS A GROUP OR SIDE BY SIDE, SHALL BE FROM THE SAME MANUFACTURER.

2. GRADE CHANGE BETWEEN GUTTER FLAG SLOPE AND THE CURB RAMP SLOPE SHALL NOT EXCEED 11%. MAXIMUM GUTTER FLAG SLOPE IS 4%. PROVIDE LONGITUDINAL DRAINAGE AROUND CURB AND AWAY FROM CURB RAMP. NO VERTICAL LIPS OR DISCONTINUITIES GREATER THAN ¼" INCH ARE ALLOWED. SLOPE OF CURB HEAD OPENING SHALL MATCH THE RAMP SLOPE, MINIMALLY 1.5% AND NOT TO EXCEED 7%. WHEN ADJACENT TO 1.5% LANDING, CONSTRUCT CURB HEAD OPENING AT 1.5% IN THE DIRECTION OF PEDESTRIAN TRAVEL.
3. AN 8.33% CURB RAMP SLOPE IS ALLOWABLE WITH FLATTENED GUTTER FLAG SLOPE (2.67% OR LESS) AND NOT TO EXCEED 11% GRADE CHANGE.
4. ±0.5% CONSTRUCTION TOLERANCE IN SIDEWALK CROSS SLOPE. THE SIDEWALK CROSS SLOPE SHALL NOT EXCEED 2% WITHOUT PRIOR APPROVAL FROM THE ENGINEER.
6. PROVIDE A LEVEL LANDING (MAXIMUM 2% SLOPE) IN ANY DIRECTION OF PEDESTRIAN TRAVEL. STANDARD LEVEL LANDING SIZE IS 5 FEET BY 5 FEET.
7. WHEN GRADE BREAK DISTANCE EXCEEDS 5 FEET, USE RADIAL DETECTABLE WARNING FIELD PER SDD 8D5-f.
8. PROVIDE GRADE BREAK PERPENDICULAR TO DIRECTION OF WHEELCHAIR TRAVEL.
9. WHEN DISTANCE IS LESS THAN 6' - 0", IT MAY BE DIFFICULT TO ACHIEVE A 7% SLOPE OR FLATTER ALONG THE RAMP. REDUCE CURB HEIGHT IN TRIANGLE AREA TO ACHIEVE 7% SLOPE OR FLATTER ON RAMP. CONSTRUCT 2-INCH MINIMUM CURB HEIGHT BETWEEN 10:1 FLARES.

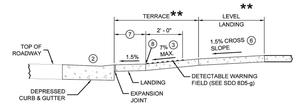

SECTION A - A FOR TYPE 2

★ MAXIMUM 2.0% SLOPE IN ALL DIRECTIONS IN FRONT OF GRADE BREAK

★★ WIDTH SHOWN ELSEWHERE IN THE PLANS

++ CONSTRUCT 6" WEDGE TO AVOID CONCRETE BREAKAGE

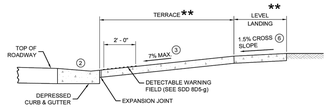

SECTION B - B FOR TYPE 3

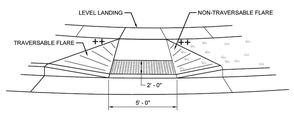

VIEW C - C FOR TYPE 3

LEGEND

- ½" EXPANSION JOINT SIDEWALK
- CONTRACTION JOINT SIDEWALK
- PAVEMENT MARKING CROSSWALK (WHITE)

CURB RAMPS TYPE 2 AND 3

STATE OF WISCONSIN
DEPARTMENT OF TRANSPORTATION

SDD 08D05-21b

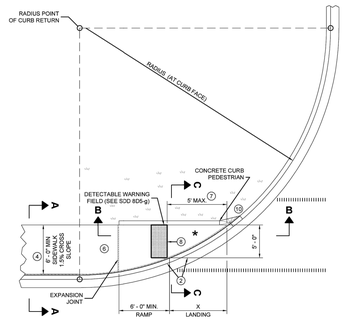

PLAN VIEW
CURB RAMP TYPE 4A

RADIUS (AT CURB FACE)	X
10 FEET	4' - 7"

INTERMEDIATE RADII CAN BE INTERPOLATED

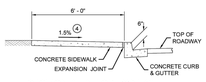

SECTION A - A FOR TYPE 4A

GENERAL NOTES

AVOID PLACING DRAINAGE STRUCTURES, JUNCTION BOXES OR OTHER OBSTRUCTIONS IN FRONT OF RAMP ACCESS AREAS.

DETAILS OF CONSTRUCTION, MATERIALS AND WORKMANSHIP NOT SHOWN ON THIS DRAWING SHALL CONFORM TO THE PERTINENT REQUIREMENTS OF THE STANDARD SPECIFICATIONS AND THE APPLICABLE SPECIAL PROVISIONS.

DETECTABLE WARNING FIELDS THAT ARE INSTALLED AS A GROUP OR SIDE BY SIDE, SHALL BE FROM THE SAME MANUFACTURER.

2. GRADE CHANGE BETWEEN GUTTER FLAG SLOPE AND THE CURB RAMP SLOPE SHALL NOT EXCEED 11%. MAXIMUM GUTTER FLAG SLOPE IS 4%. PROVIDE LONGITUDINAL DRAINAGE AROUND CURB AND AWAY FROM CURB RAMP. NO VERTICAL LIPS OR DISCONTINUITIES GREATER THAN ¼" INCH ARE ALLOWED. SLOPE OF CURB HEAD OPENING SHALL MATCH THE RAMP SLOPE, MINIMALLY 1.5% AND NOT TO EXCEED 7%. WHEN ADJACENT TO 1.5% LANDING, CONSTRUCT CURB HEAD OPENING AT 1.5% IN THE DIRECTION OF PEDESTRIAN TRAVEL.
3. AN 8.33% CURB RAMP SLOPE IS ALLOWABLE WITH FLATTENED GUTTER FLAG SLOPE AND NOT TO EXCEED 11% GRADE CHANGE.
4. ±0.5% CONSTRUCTION TOLERANCE IN SIDEWALK CROSS SLOPE. THE SIDEWALK CROSS SLOPE SHALL NOT EXCEED 2% WITHOUT PRIOR APPROVAL FROM THE ENGINEER.
6. PROVIDE A LEVEL LANDING (MAXIMUM 2% SLOPE) IN ANY DIRECTION OF PEDESTRIAN TRAVEL. STANDARD LEVEL LANDING SIZE IS 5 FEET BY 5 FEET.
7. WHEN THIS GRADE BREAK DISTANCE EXCEEDS 5 FEET, USE RADIAL DETECTABLE WARNING FIELD PER SDD 8D5-f.
8. PROVIDE GRADE BREAK PERPENDICULAR TO DIRECTION OF WHEELCHAIR TRAVEL.
10. INSTALL TRANSITION NOSE (INCIDENTAL TO OTHER PAY ITEMS). DO NOT MARK TRANSITION NOSE.

LEGEND

- ½" EXPANSION JOINT SIDEWALK
- CONTRACTION JOINT SIDEWALK
- PAVEMENT MARKING CROSSWALK (WHITE)

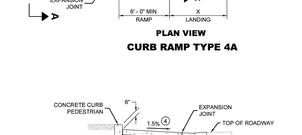

SECTION C - C FOR TYPE 4A

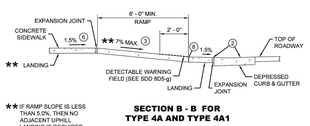

★★ IF RAMP SLOPE IS LESS THAN 5.0%, THEN NO ADJACENT UPHILL LANDING IS REQUIRED

SECTION B - B FOR TYPE 4A AND TYPE 4A1

★ MAXIMUM 2.0% SLOPE IN ALL DIRECTIONS IF FRONT OF GRADE BREAK

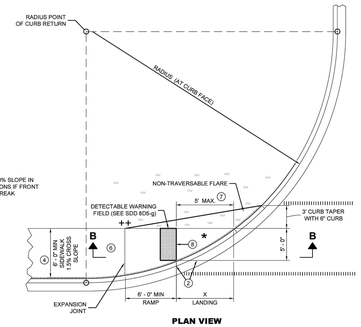

PLAN VIEW
CURB RAMP TYPE 4A1

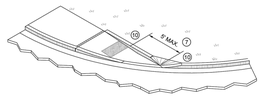

ISOMETRIC VIEW FOR TYPE 4A

ISOMETRIC VIEW FOR TYPE 4A1

++ CONSTRUCT 6" WEDGE TO AVOID CONCRETE BREAKAGE

CURB RAMPS TYPE 4A AND 4A1

STATE OF WISCONSIN
DEPARTMENT OF TRANSPORTATION

SDD 08D05-21c

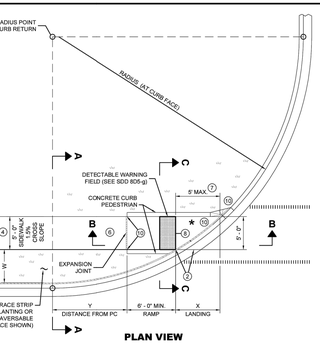

PLAN VIEW
CURB RAMP TYPE 4B

RADIUS (AT CURB FACE)	W = 3' - 0"		W = 4' - 0"		W = 5' - 0"		W = 6' - 0"		W = 7' - 0"		W = 8' - 0"		W = 9' - 0"		W = 10' - 0"	
	X	Y	X	Y	X	Y	X	Y	X	Y	X	Y	X	Y	X	Y
10 FEET	2' - 10 ¾"	0' - 5"	2' - 1"	1' - 4 ¾"	1' - 5"	2' - 1"	0' - 10"	2' - 7 ¾"	0' - 3 ¾"	3' - 0 ¾"						
15 FEET	4' - 6 ¾"	2' - 1 ¾"	3' - 9"	3' - 5 ¾"	3' - 1 ¾"	4' - 6"	2' - 6 ¾"	5' - 4 ¾"	2' - 1"	6' - 1"	1' - 8"	6' - 8 ¾"	1' - 3 ¾"	7' - 2 ¾"	0' - 10 ¾"	7' - 7 ¾"
20 FEET			4' - 11 ¾"	5' - 1 ¾"	4' - 3 ¾"	6' - 5 ¾"	3' - 8 ¾"	7' - 7"	3' - 3"	8' - 6 ¾"	2' - 10"	9' - 4 ¾"	2' - 5 ¾"	10' - 1 ¾"	2' - 1 ¾"	10' - 9"
30 FEET									4' - 10 ¾"	12' - 5 ¾"	4' - 5 ¾"	13' - 7 ¾"	4' - 0 ¾"	14' - 8 ¾"	3' - 8 ¾"	15' - 8 ¾"
40 FEET															4' - 10 ¾"	19' - 8 ¾"

INTERMEDIATE RADII CAN BE INTERPOLATED
DIMENSION "Y" IS CALCULATED BASED ON 6'-0" RAMP LENGTH
DIMENSION "X" IS CALCULATED BASED ON 5'-0" SIDEWALK WIDTH

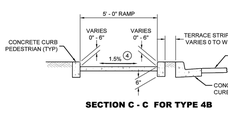

SECTION C - C FOR TYPE 4B

GENERAL NOTES

AVOID PLACING DRAINAGE STRUCTURES, JUNCTION BOXES OR OTHER OBSTRUCTIONS IN FRONT OF RAMP ACCESS AREAS.

DETAILS OF CONSTRUCTION, MATERIALS AND WORKMANSHIP NOT SHOWN ON THIS DRAWING SHALL CONFORM TO THE PERTINENT REQUIREMENTS OF THE STANDARD SPECIFICATIONS AND THE APPLICABLE SPECIAL PROVISIONS.

DETECTABLE WARNING FIELDS THAT ARE INSTALLED AS A GROUP OR SIDE BY SIDE, SHALL BE FROM THE SAME MANUFACTURER.

2. GRADE CHANGE BETWEEN GUTTER FLAG SLOPE AND THE CURB RAMP SLOPE SHALL NOT EXCEED 11%. MAXIMUM GUTTER FLAG SLOPE IS 4%. PROVIDE LONGITUDINAL DRAINAGE AROUND CURB AND AWAY FROM CURB RAMP. NO VERTICAL LIPS OR DISCONTINUITIES GREATER THAN ¼" INCH ARE ALLOWED. SLOPE OF CURB HEAD OPENING SHALL MATCH THE RAMP SLOPE, MINIMALLY 1.5% AND NOT TO EXCEED 7%. WHEN ADJACENT TO 1.5% LANDING, CONSTRUCT CURB HEAD OPENING AT 1.5% IN THE DIRECTION OF PEDESTRIAN TRAVEL.
3. AN 8.33% CURB RAMP SLOPE IS ALLOWABLE WITH FLATTENED GUTTER FLAG SLOPE (2.67% OR LESS) AND NOT TO EXCEED 11% GRADE CHANGE.
4. ±0.5% CONSTRUCTION TOLERANCE IN SIDEWALK CROSS SLOPE. THE SIDEWALK CROSS SLOPE SHALL NOT EXCEED 2% WITHOUT PRIOR APPROVAL FROM THE ENGINEER.
6. PROVIDE A LEVEL LANDING (MAXIMUM 2% SLOPE) IN ANY DIRECTION OF PEDESTRIAN TRAVEL. STANDARD LEVEL LANDING SIZE IS 5 FEET BY 5 FEET.
7. WHEN THIS GRADE BREAK DISTANCE EXCEEDS 5 FEET, USE RADIAL DETECTABLE WARNING FIELD PER SDD 8D5-f.
8. PROVIDE GRADE BREAK PERPENDICULAR TO DIRECTION OF WHEELCHAIR TRAVEL.
10. INSTALL TRANSITION NOSE (INCIDENTAL TO OTHER PAY ITEMS). DO NOT MARK TRANSITION NOSE.

LEGEND

- ½" EXPANSION JOINT SIDEWALK
- CONTRACTION JOINT SIDEWALK
- PAVEMENT MARKING CROSSWALK (WHITE)

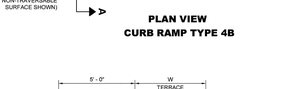

SECTION A - A FOR TYPE 4B

★ MAXIMUM 2.0% SLOPE IN ALL DIRECTIONS IF FRONT OF GRADE BREAK

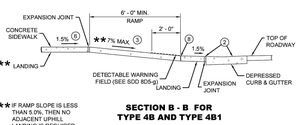

★★ IF RAMP SLOPE IS LESS THAN 5.0%, THEN NO ADJACENT UPHILL LANDING IS REQUIRED

SECTION B - B FOR TYPE 4B AND TYPE 4B1

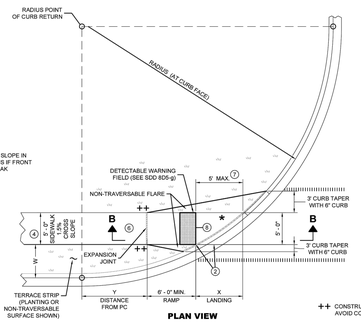

PLAN VIEW
CURB RAMP TYPE 4B1

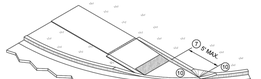

ISOMETRIC VIEW FOR TYPE 4B

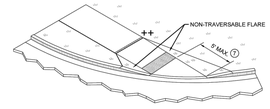

ISOMETRIC VIEW FOR TYPE 4B1

++ CONSTRUCT 6" WEDGE TO AVOID CONCRETE BREAKAGE

CURB RAMPS TYPE 4B AND 4B1

STATE OF WISCONSIN
DEPARTMENT OF TRANSPORTATION

SDD 08D05-21d

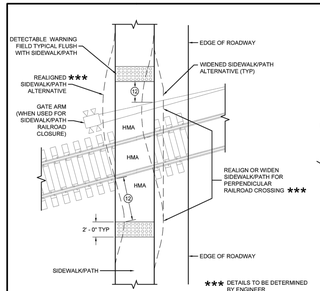

★★★ DETAILS TO BE DETERMINED BY ENGINEER

CURB RAMP TYPE 8
DETECTABLE WARNINGS FOR SIDEWALKS OR SHARED USE PATHS AT RAILROAD CROSSINGS

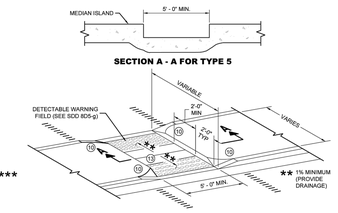

SECTION A - A FOR TYPE 5

CURB RAMP TYPE 5
MEDIAN ISLAND
NON-ELEVATED PEDESTRIAN CROSSING

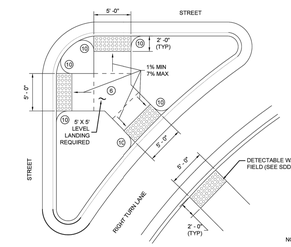

CURB RAMP TYPE 6
DETECTABLE WARNING AT ISLANDS

REFER TO GENERAL NOTES 2 AND 5 FOR ALL ISLAND CURB RAMPS

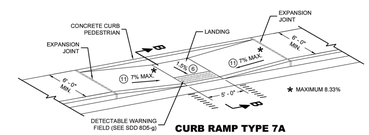

★ MAXIMUM 8.33%

CURB RAMP TYPE 7A
FOR INTERSECTIONS AND MID BLOCK CROSSINGS

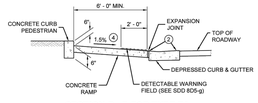

SECTION B - B FOR TYPE 7A

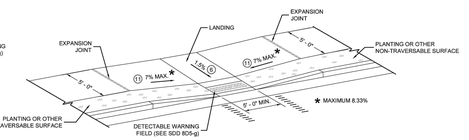

★ MAXIMUM 8.33%

CURB RAMP TYPE 7B
FOR INTERSECTIONS AND MID BLOCK CROSSINGS

CURB RAMPS TYPE 5, 6, 7A, 7B & 8

STATE OF WISCONSIN
DEPARTMENT OF TRANSPORTATION

SDD 08D05-21e

CONTOUR CIVIL DESIGN
P.O. BOX 89, ROCKFORD, MINNESOTA 55373
TEL: 612.730.2265 | WWW.CONTOURCD.COM

I HEREBY CERTIFY THAT THIS PLAN, SPECIFICATION OR REPORT WAS PREPARED BY ME OR UNDER MY DIRECT SUPERVISION AND THAT I AM A DULY LICENSED PROFESSIONAL ENGINEER UNDER THE LAWS OF THE STATE OF WISCONSIN

NAME: JOSEPH T RADACH PE

SIGNATURE:

DATE: 01/09/26 LIC #: E-43913

REVISIONS	ISSUE DATE: 01/09/26	BY: JTR
1.		
2.		
3.		
4.		
5.		
6.		
7.		

OWNER
ALLIANCE DEVELOPMENT
230 Ohio Street, Suite 200
Oshkosh, WI 54902

DETAILS

CHIPOTLE RESTAURANT
Mormon Coulee Road & Losey Blvd S
La Crosse, WI 54601

SHEET NUMBER
C6.3

01/09/26 c:\users\contour civil\dropbox\pc\desktop\contour_jobs\25019 - chipotle la crosse\sdd\25019_details.dwg

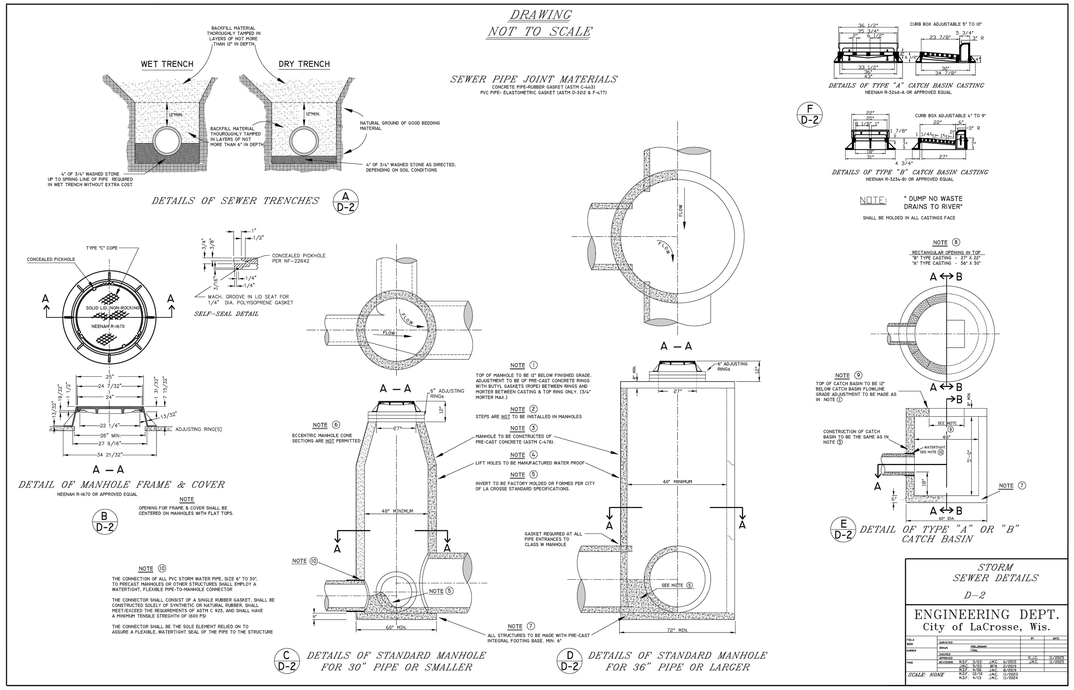

WATER SERVICE LATERAL DETAIL

SERVICE PIPE	CORP. STOP	CURB STOP	SERVICE BOX
1"	1"	1"	2 1/2"
1 1/4"	1 1/4"	1 1/4"	3"
1 1/2"	1 1/4" X 1 1/2"	1 1/2"	3"
2"	1 1/2" X 2"	2"	3"

CURB BOX : SEVEN FOOT BOX WITHOUT ROD-MUELLER # H10314, MC DONALD # 5601 OR EQUAL

54" or 57" ROD : MUELLER # 82868, MC DONALD # 5660 OR EQUAL

LID : MUELLER # 87081, MC DONALD # 5601-L OR EQUAL

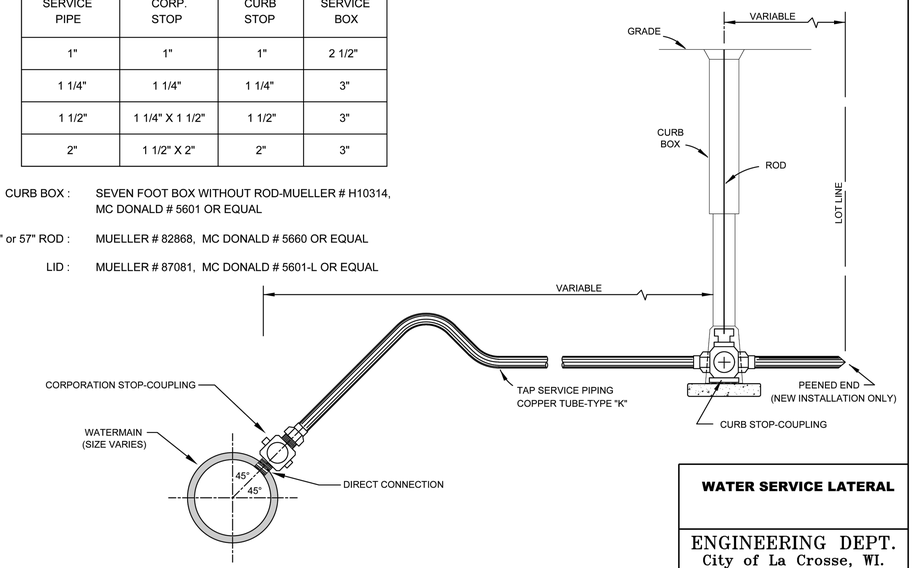

NOTE:
SERVICES 2" OR SMALLER ARE TO BE TAPPED 45° FROM HORIZONTAL ON WATERMAIN

WATER SERVICE LATERAL
ENGINEERING DEPT.
City of La Crosse, WI.
SHEET NO. D-3 TOTAL SHEETS

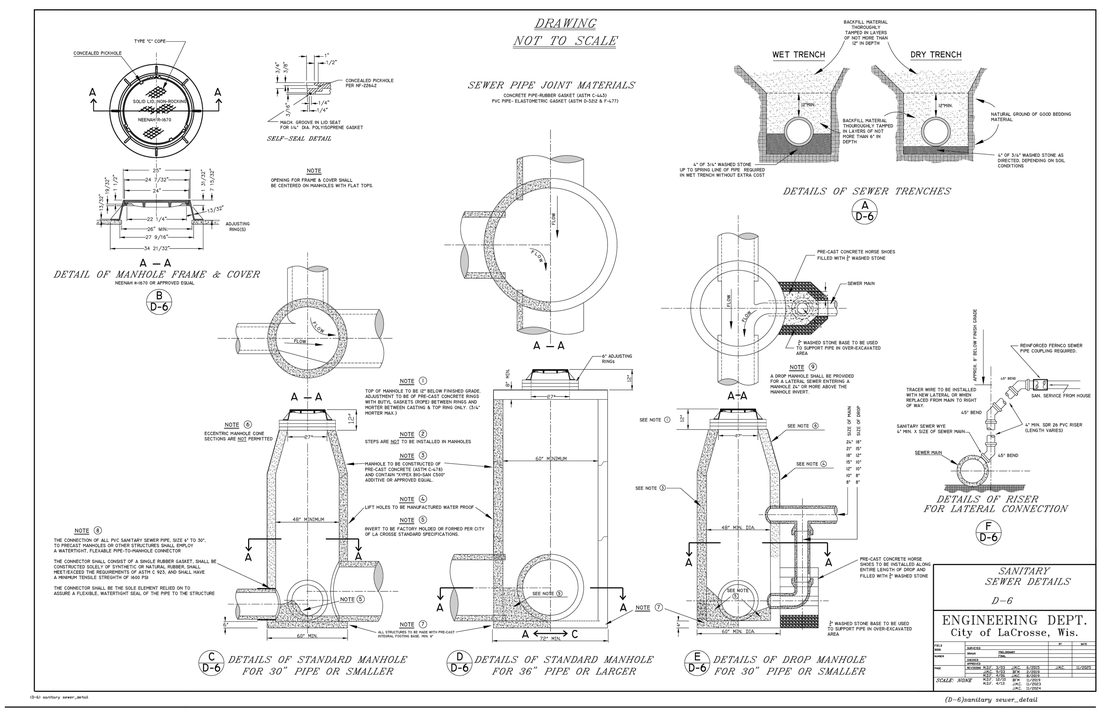

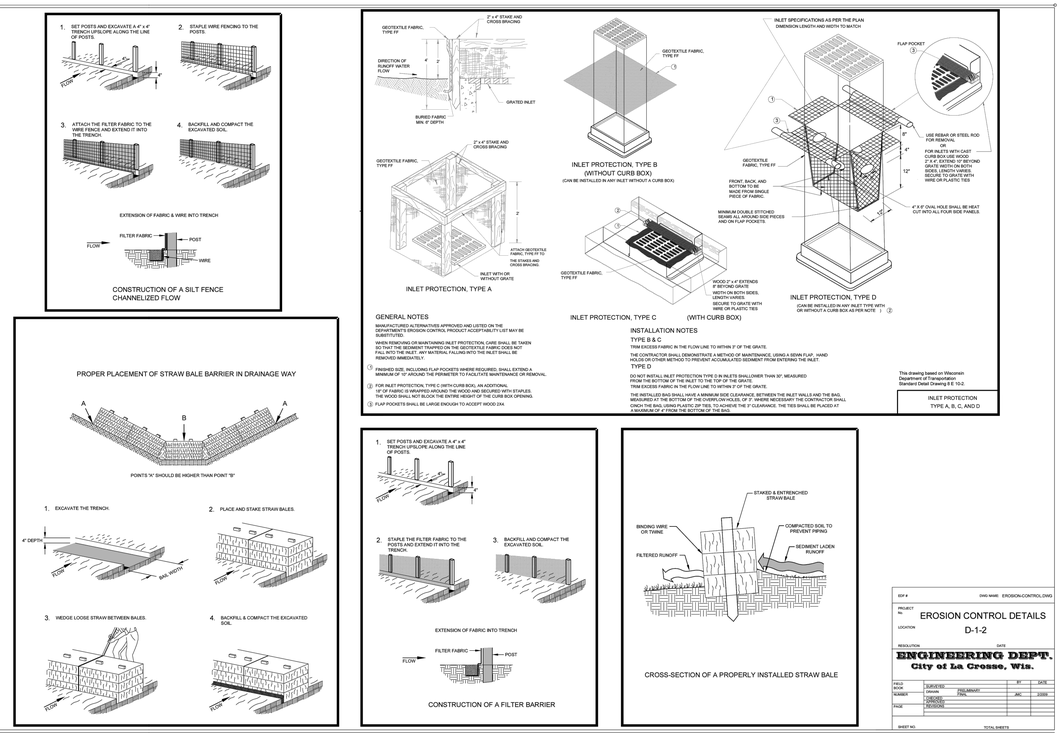

CONTOUR CIVIL DESIGN
P.O. BOX 89, ROCKFORD, MINNESOTA 55373
TEL: 612.730.2265 | WWW.CONTOURCD.COM

I HEREBY CERTIFY THAT THIS PLAN, SPECIFICATION OR REPORT WAS PREPARED BY ME OR UNDER MY DIRECT SUPERVISION AND THAT I AM A DULY LICENSED PROFESSIONAL ENGINEER UNDER THE LAWS OF THE STATE OF WISCONSIN

NAME: JOSEPH T RADACH PE

SIGNATURE:

DATE: 01/09/26 LIC #: E-43913

REVISIONS	ISSUE DATE: 01/09/26	BY: JTR
1.		
2.		
3.		
4.		
5.		
6.		
7.		

OWNER

ALLIANCE DEVELOPMENT
230 Ohio Street, Suite 200
Oshkosh, WI 54902

DETAILS

CHIPOTLE RESTAURANT
Mormon Coulee Road & Losey Blvd S
La Crosse, WI 54601

SHEET NUMBER
C6.4

01/09/26 c:\users\contour civil\dropbox\pc\desktop\contour_jobs\25019 - chipotle la crosse\cad\25019_details.dwg

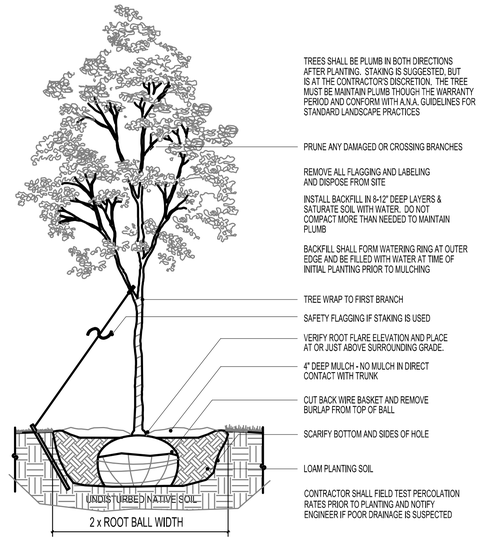

1 DECIDUOUS TREE PLANTING DETAIL

SCALE: 1/2" = 1'-0"

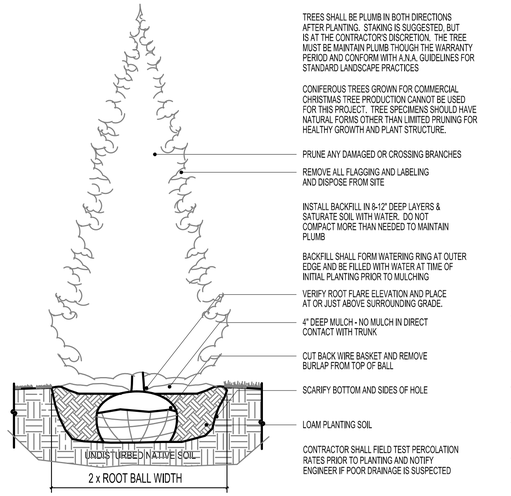

2 CONIFEROUS TREE PLANTING DETAIL

SCALE: 1/2" = 1'-0"

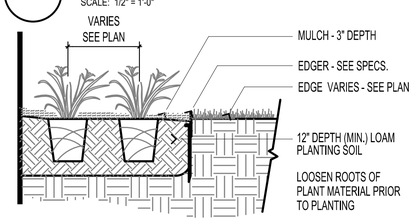

3 PERENNIAL PLANTING

SCALE: 3/4" = 1'-0"

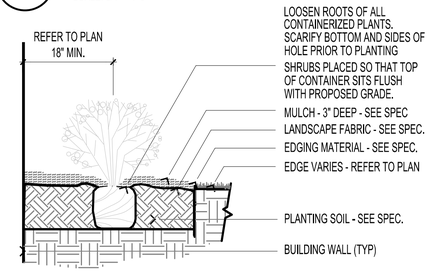

4 SHRUB PLANTING DETAIL

SCALE: 3/4" = 1'-0"

O.C. PLANT SPACING

P =	R =	AREA PER PLANT IN SF =
12"	10.5"	0.81 SF
15"	12.7"	1.35 SF
18"	15.6"	1.95 SF
24"	20.8"	3.46 SF

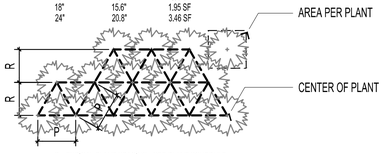

P = TYPICAL PLANT SPACING - SEE PLANT SCHEDULE
R = PLANT ROW ASSUMING TRIANGULAR SPACING
NUMBER OF PLANTS = TOTAL AREA/AREA PER PLANT

5 PERENNIAL SPACING GUIDELINES

SCALE: 3/4" = 1'-0"

PLANTING DETAILS:

GRAPHIC	MATERIAL	SPECIFICATION	NOTES
	ROCK MULCH	1.5" DIAMETER CRUSHED GRANITE ROCK MULCH COLOR TO MATCH OR COMPLIMENT BUILDING	3" DEPTH
	SOD	BLUEGRASS PEAT SOD	N/A

GROUNDCOVER SCHEDULE:

1. THIS PLAN IS BASED ON LANDSCAPE ORDINANCE FROM THE CITY OF LaCROSSE THAT REQUIRES:
   - ONE BOULEVARD TREE PER 40 LF OF FRONTAGE (440 LF = 11 TREES)
   - TWO TREES AND 8 SHRUBS PER 600 SF OF LANDSCAPED AREA (1,074 SF = 4 TREES AND 15 SHRUBS)
2. LANDSCAPING HAS BEEN PROVIDED AS FOLLOWS:
   - OVERSTORY TREES = 11 TREES
   - CONIFEROUS TREES = 0 TREES
   - ORNAMENTAL TREES = 4 TREES
   - SHRUB AND ORNAMENTAL GRASS PLANTINGS = 26 TOTAL
3. TREES WILL BE PLANTED AT THE MINIMUM SIZES AS SHOWN ON THE PLANT SCHEDULE. PROPOSED MINIMUM SIZES ARE:
   - 3.0" CAL. FOR DECIDUOUS TREES
   - 5' HEIGHT FOR CONIFEROUS TREES
   - 2.0" CAL. FOR ORNAMENTAL TREES
   - 5 GALLON CONTAINER FOR SHRUBS

LANDSCAPE CALCULATIONS:

THE CONTRACTOR SHALL:

VISIT SITE PRIOR TO SUBMITTING BID TO INSPECT INSPECT THE SITE AND BECOME FAMILIAR WITH EXISTING CONDITIONS RELATING TO THE SCOPE OF WORK.

VERIFY THE LAYOUT AND ANY DIMENSIONS SHOWN AND BRING TO THE ATTENTION OF THE ENGINEER ANY DISCREPANCIES THAT WOULD COMPROMISE THE DESIGN OR INTENT OF THE PROJECT LAYOUT.

PROTECT ALL EXISTING FEATURES FROM DAMAGE DURING PLANTING OPERATIONS. ANY DAMAGE SHALL BE REPAIRED OR REPLACED AT NO COST TO THE OWNER.

CALL FOR A UTILITY LOCATION TO VERIFY ALIGNMENT AND LOCATION OF ALL UNDERGROUND AND ABOVE GRADE UTILITIES AND PROVIDE PROTECTION FOR SAME BEFORE CONSTRUCTION BEGINS.

LANDSCAPE INSTALLATION AND PHASING:

NO PLANTINGS SHALL BE INSTALLED UNTIL GRADING AND CONSTRUCTION HAS BEEN COMPLETED IN THE PLANTING AREAS.

PLANT MATERIALS:

ALL PLANT MATERIAL SHALL COMPLY WITH THE LATEST EDITION OF THE NURSERY STOCK STANDARDS AS PUBLISHED BY THE AMERICAN NURSERY AND LANDSCAPE ASSOCIATION (ANLA).

PLANTS SHALL NOT BE STOCKPILED ON SITE ANY LONGER THAN NECESSARY AND SHALL HAVE ADEQUATE WATERING AT ALL TIMES PRIOR TO PLANTING. PLANTS THAT SHOW OBVIOUS SIGNS OF DISTRESS FROM HEAT, OR LACK OF WATER, SHALL NOT BE INSTALLED. ROOT BALLS FOR ALL TREES SHALL BE COVERED WITH MULCH WHILE AWAITING PLANTING.

THE LANDSCAPE PLAN TAKES PRECEDENCE OVER THE PLANT SCHEDULE IF ANY DISCREPANCIES IN QUANTITIES EXIST. SPECIFICATIONS TAKE PRECEDENCE OVER NOTES.

ALL PROPOSED PLANTS SHALL BE LOCATED AND STAKED AS SHOWN ON PLAN. ENGINEER MUST APPROVE ALL STAKING PRIOR TO ANY DIGGING.

NO PLANT MATERIAL SUBSTITUTIONS WILL BE ACCEPTED UNLESS APPROVAL IS REQUESTED OF THE ENGINEER PRIOR TO THE SUBMISSION OF A BID AND/OR QUOTATION.

ADJUSTMENTS IN LOCATION OF PROPOSED PLANT MATERIALS ARE OCCASIONALLY NEEDED IN THE FIELD. SHOULD AN ADJUSTMENT BE REQUIRED, THE ENGINEER MUST BE NOTIFIED IN ADVANCE TO DISCUSS AN ACCEPTABLE MODIFICATION..

ALL PLANTING AREAS RECEIVING GROUND COVER, PERENNIALS, ANNUALS, AND/OR VINES SHALL RECEIVE A MINIMUM OF 8" DEPTH OF PLANTING SOIL CONSISTING OF AT LEAST 45 PARTS TOPSOIL, 45 PARTS PEA/COMPOST AND 10 PARTS SAND.

IF THE LANDSCAPE CONTRACTOR IS CONCERNED OR PERCEIVES ANY DEFICIENCIES IN THE PLANT SELECTIONS, SOIL CONDITIONS OR ANY OTHER SITE CONDITION WHICH MIGHT NEGATIVELY AFFECT PLANT ESTABLISHMENT, SURVIVAL OR GUARANTEE, HE MUST BRING THESE DEFICIENCIES TO THE ATTENTION OF THE ENGINEER PRIOR TO PROCUREMENT AND/OR INSTALLATION.

EDGING AND MAINTENANCE STRIPS:

BLACK POWDER COATED STEEL EDGER TO BE USED TO CONTAIN SHRUBS, PERENNIALS, AND ANNUALS WHERE BED MEETS SOD/SEED UNLESS NOTED OTHERWISE.

PLANTING NOTES:

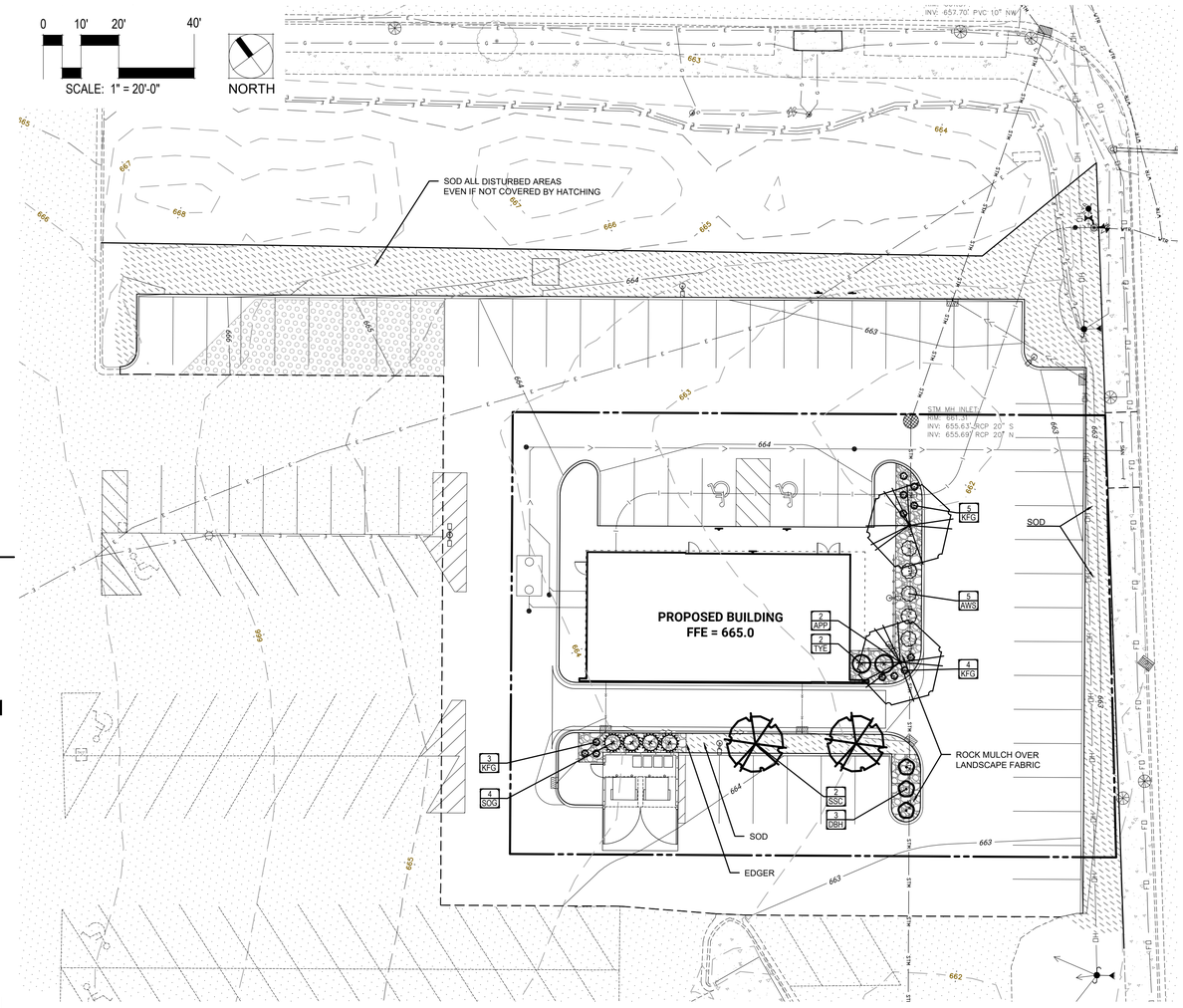

OVERALL TREE PLANTING & LANDSCAPE PLAN:

MAINTENANCE STRIPS SHALL HAVE EDGER AND MULCH AS SPECIFIED OR AS INDICATED ON DRAWINGS.

MULCHING:

ROCK MULCH OR COBBLE SHALL BE CLEAN AND FREE OF ANY SIGNIFICANT DIRT, SOIL, OR ORGANIC MATTER THAT WILL PROMOTE WEED GROWTH. HIGH QUALITY GEOTEXTILE FABRIC, WITH EDGES OVERLAPPED AT LEAST 12", SHALL BE PLACED UNDER ALL ROCK MULCH.

ALL SHRUB BED MASSES SHALL RECEIVE 3" COMPACTED DEPTH LAYER OF BROWN SHREDDED WOOD MULCH WITH A UNIFORM TREATMENT OF PRE-EMERGENT HERBICIDE (PREEN OR EQUAL) APPLIED PRIOR TO MULCHING.

ALL PERENNIAL PLANTING BEDS SHALL RECEIVE 3" COMPACTED DEPTH LAYER OF BROWN SHREDDED WOOD MULCH WITH A UNIFORM TREATMENT OF PRE-EMERGENT HERBICIDE (PREEN OR EQUAL) APPLIED PRIOR TO MULCHING.

ALL TREES SHALL HAVE A MULCH RING (MINIMUM 48" DIAMETER) OF 4" DEEP SHREDDED HARDWOOD MULCH WITH NONE IN DIRECT CONTACT WITH TREE TRUNK.

SPREAD GRANULAR PRE EMERGENT HERBICIDE (PREEN OR EQUAL) PER MANUFACTURER'S RECOMMENDED RATES UNDER ALL MULCHED AREAS INCLUDING TREE MULCH RINGS.

IRRIGATION:

VERIFY EXISTING/PROPOSED IRRIGATION SYSTEM LAYOUT AND CONFIRM LIMITS OF IRRIGATION PRIOR TO SUPPLYING SHOP DRAWINGS.

UNLESS SPECIFICALLY NOTED OTHERWISE, THE LANDSCAPE CONTRACTOR SHALL BE RESPONSIBLE FOR PROVIDING AN IRRIGATION LAYOUT PLAN AND SHOP DRAWING AS A PART OF THE SCOPE OF WORK WHEN BIDDING. THE IRRIGATION SHOP DRAWINGS SHALL BE REVIEWED BY THE ENGINEER PRIOR TO ORDERING MATERIALS OR INSTALLATION.

THE LANDSCAPE CONTRACTOR SHALL INSURE THAT ALL SODDED/SEEDED AND PLANTED AREAS ARE IRRIGATED PROPERLY, INCLUDING THOSE AREAS DIRECTLY AROUND AND ABUTTING BUILDING FOUNDATION.

TURF OR OTHER SEEDED AREAS SHALL BE ON DIFFERENT ZONES THAN PLANTING BEDS IN ORDER TO CONTROL WATER FLOW TO DIFFERING PLANT SPECIES.

THE LANDSCAPE CONTRACTOR SHALL PROVIDE THE OWNER WITH A WATERING/LAWN IRRIGATION SCHEDULE APPROPRIATE TO THE PROJECT SITE CONDITIONS AND TO PLANT MATERIAL GROWTH REQUIREMENTS.

SEEDING AND SODDING:

SEED ALL AREAS DISTURBED DUE TO GRADING OTHER THAN THOSE AREAS NOTED TO RECEIVE SOD. SEED SHALL BE INSTALLED AND MULCHED PER MNDOT SPECS UNLESS OTHERWISE NOTED.

ALL SEEDED AREAS WITH SLOPES STEEPER THAN 4:1 SHALL HAVE STRAW MAT, OR OTHER SUITABLE EROSION CONTROL METHODS, IN PLACE IMMEDIATELY AFTER SEEDING.

WHERE SOD OR SEED ABUTS A PAVED SURFACE, FINISHED GRADE SHALL BE HELD 1" BELOW SURFACE ELEVATION OF TRAIL, SLAB, CURB, ETC.

SOD SHALL BE LAID PARALLEL TO THE CONTOURS AND SHALL HAVE STAGGERED JOINTS. SOD MUST BE STAKED WITH WOOD LATH OR METAL STAKES ON SLOPES STEEPER THAN 3:1 OR IN DRAINAGE SWALES.

CALENDAR OR CLIMATIC RESTRICTIONS:

THE PREFERRED SODDING WINDOW IS FROM AUGUST 15th - OCTOBER 15th. HOWEVER, SOD MAY BE INSTALLED AT ANY TIME PROVIDED ADEQUATE IRRIGATION COVERAGE IS AVAILABLE. IF NO IRRIGATION IS AVAILABLE, THE CONTRACTOR IS RESPONSIBLE FOR SUPPLEMENTAL WATERING AS NEEDED FOR SOD ESTABLISHMENT.

LANDSCAPE PLANTING SHOULD GENERALLY OCCUR FROM MAY 1st - JUNE 15th OR FROM SEPTEMBER 1st - OCTOBER 15th. PLANTING OUTSIDE THESE DATES IS NOT RECOMMENDED, BUT CAN OCCUR WITH PROPER CARE OF NURSERY STOCK ON SITE AND WITH AMPLE WATERING.

OWNER ACCEPTANCE AND WARRANTY REQUIREMENTS

THE CONTRACTOR SHALL SUBMIT A WRITTEN REQUEST FOR OWNER ACCEPTANCE INSPECTION OF ALL LANDSCAPE AND SITE IMPROVEMENTS.

THE CONTRACTOR IS RESPONSIBLE FOR ON-GOING MAINTENANCE OF ALL NEWLY INSTALLED MATERIALS UNTIL TIME OF OWNER ACCEPTANCE. ANY ACTS OF VANDALISM OR DAMAGE WHICH MAY OCCUR PRIOR TO OWNER ACCEPTANCE SHALL BE THE RESPONSIBILITY OF THE CONTRACTOR.

AT A MINIMUM, THE CONTRACTOR SHALL GUARANTEE NEW PLANT MATERIAL THROUGH ONE CALENDAR YEAR FROM THE DATE OF OWNER ACCEPTANCE. THE WARRANTY (INCLUDINGT AT LEAST ONE FULL GROWING SEASON) FOR LANDSCAPE MATERIALS SHALL BEGIN ON THE DATE OF ACCEPTANCE BY THE ENGINEER AFTER THE COMPLETION OF PLANTING OF ALL LANDSCAPE MATERIALS. PARTIAL ACCEPTANCE WILL NOT BE CONSIDERED.

SYM	QTY	COMMON NAME	SCIENTIFIC NAME	SIZE	CONT	COMMENTS
DECIDUOUS TREES						
ORNAMENTAL TREES						
APP	2	APOLLO MAPLE	Acer saccharum 'Barrett Cole'	2" CAL	B&B	SINGLE STEM
SSC	2	SPRING SNOW CRABAPPLE	Malus x 'Spring Snow'	2" CAL	B&B	SINGLE STEM
DECIDUOUS SHRUBS						
AWS	5	ANTHONY WATERER SPIREA	Spiraea x bumalda 'Anthony Waterer'	5 GAL	POT	PER PLAN
DBH	3	DWARF BUSH HONEYSUCKLE	Lonicera diervilla	5 GAL	POT	PER PLAN
CONIFEROUS SHRUBS						
SGJ	4	SEA OF GOLD JUNIPER	Juniperus x pfitzeriana 'MonSan"	5 GAL	POT	PER PLAN
TYE	2	TAUNTON YEW	Taxus x media 'Tuanton'	5 GAL	POT	PER PLAN
ORNAMENTAL GRASSES						
KFG	12	KARL FOERSTER GRASS	Calamagrostis x acutiflora 'Karl Foerster'	2 GAL	POT	PER PLAN

PLANTING SCHEDULE:

CONTOUR CIVIL DESIGN
P.O. BOX 89, ROCKFORD, MINNESOTA 55373
TEL: 612.730.2265 | WWW.CONTOURCD.COM

I HEREBY CERTIFY THAT THIS PLAN, SPECIFICATION OR REPORT WAS PREPARED BY ME OR UNDER MY DIRECT SUPERVISION AND THAT I AM A DULY LICENSED PROFESSIONAL ENGINEER UNDER THE LAWS OF THE STATE OF WISCONSIN

NAME: JOSEPH T RADACH PE

SIGNATURE:

DATE: 01/09/26 LIC #: E-43913

REVISIONS | ISSUE DATE: 01/09/26 | BY: JTR

1.
2.
3.
4.
5.
6.
7.

OWNER

ALLIANCE DEVELOPMENT
230 Ohio Street, Suite 200
Oshkosh, WI 54902

LANDSCAPE PLAN

CHIPOTLE RESTAURANT
Mormon Coulee Road & Losey Blvd S
La Crosse, WI 54601

SHEET NUMBER
L1.1

01/09/26 c:\users\contour civil\dropbox\pc\desktop\contour_jobs\25019 - chipotle la crosse\cad\25019_landscape.dwg

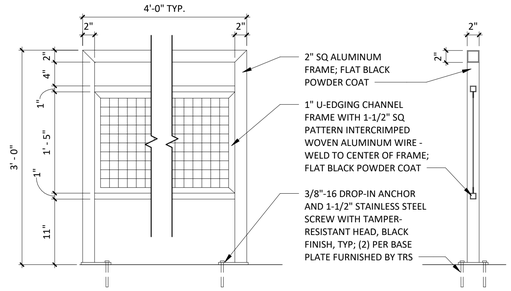

2 RAILING MOUNTING DETAIL

SCALE: 1" = 1'-0"

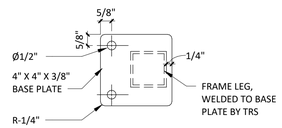

3 RAILING BASE PLATE PLAN DETAIL

SCALE: 3" = 1'-0"

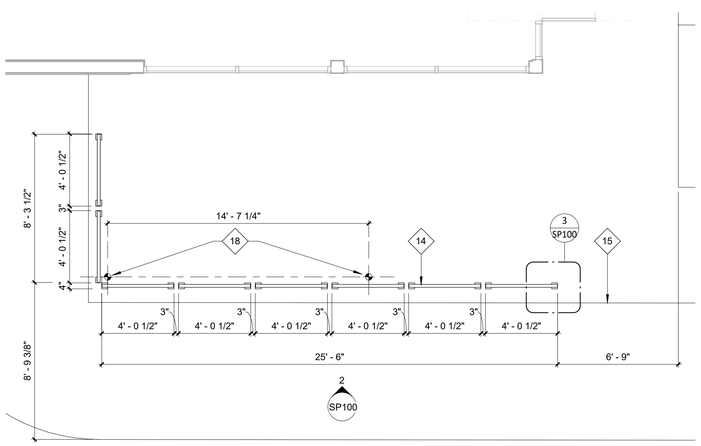

4 PATIO PLAN

SCALE: 1/4" = 1'-0"

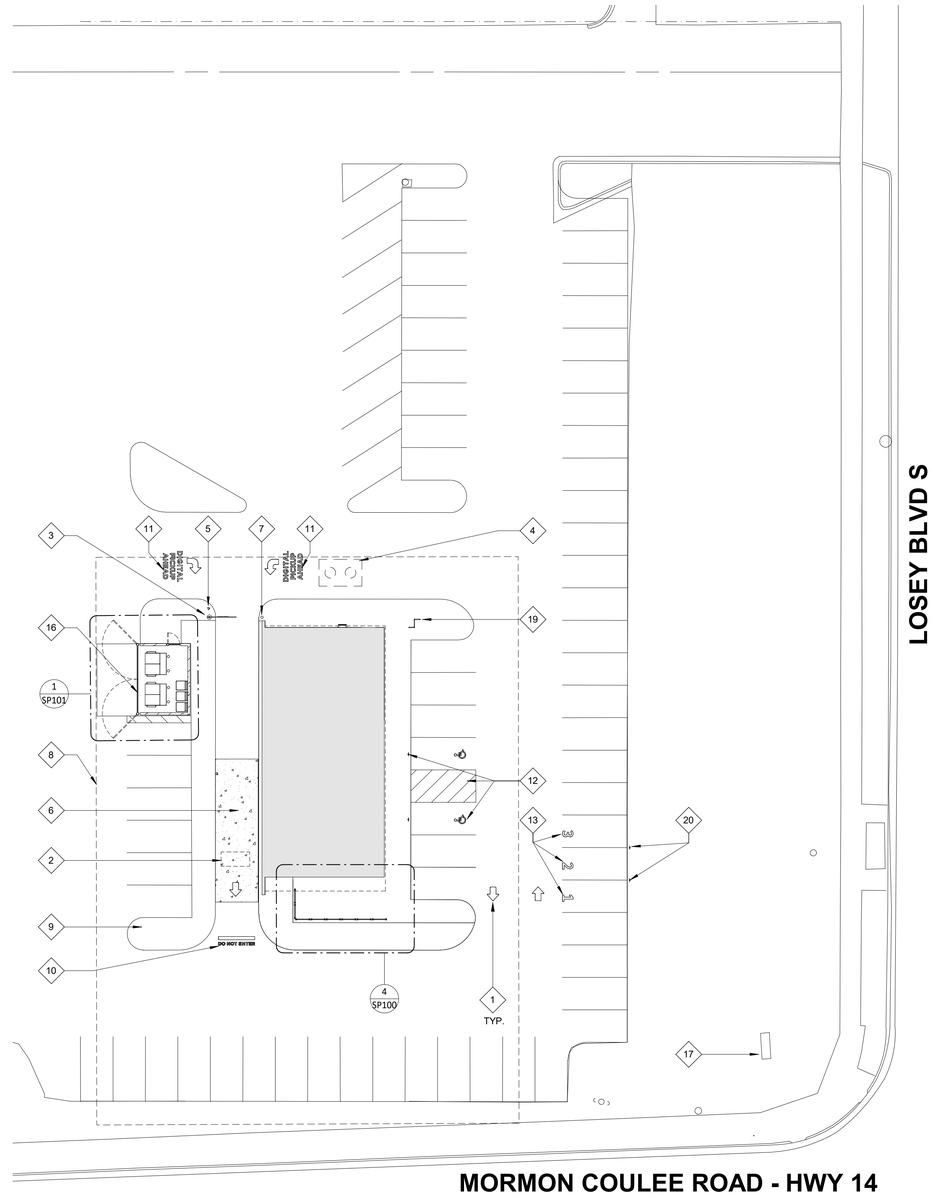

1 ARCHITECTURAL SITE PLAN

SCALE: 1" = 20'-0"

SITE PLAN GENERAL NOTES

1. CONTRACTOR SHALL PROTECT ADJACENT LANDS AND STRUCTURES FROM DAMAGE DURING CONSTRUCTION. ANY OFF-SITE AREAS DISTURBED SHALL BE RETURNED TO A CONDITION EQUAL TO OR BETTER THAN THE EXISTING CONDITION.
2. NECESSARY PERMITS FOR SITE WORK AND CONSTRUCTION SHALL BE OBTAINED BY THE GENERAL CONTRACTOR PRIOR TO BEGINNING OF WORK.
3. NECESSARY BARRICADES, SUFFICIENT LIGHTING, SIGNS AND OTHER TRAFFIC CONTROL METHODS MAY BE NECESSARY FOR THE PROTECTION AND SAFETY OF THE PUBLIC SHALL BE PROVIDED AND MAINTAINED THROUGHOUT THE LIFE OF THE CONSTRUCTION.
4. COORDINATE WITH THE LOCAL AUTHORITY HAVING JURISDICTION PRIOR TO ANY CONSTRUCTION IN THE PUBLIC RIGHT OF WAY.
5. NO DEMOLITION MATERIALS SHALL BE DISPOSED ON ON-SITE. ALL DEBRIS SHALL BE HAULED OFF-SITE TO A RECYCLING AREA APPROVED BY THE LOCAL AUTHORITY HAVING JURISDICTION FOR THE HANDLING OF DEMOLITION DEBRIS.
6. GENERAL CONTRACTOR IS RESPONSIBLE TO COORDINATE THE LOCATION OF THE EXTERIOR GREASE INTERCEPTOR AND FIELD VERIFY EXISTING SITE CONDITIONS THAT COULD IMPACT THE LOCATION DURING THE BIDDING PHASE OF THE PROJECT AND ASSIGN THE APPLICABLE COSTS. THE LOCATION SHALL NOT INTERFERE WITH ANY EXISTING SETBACKS, EASEMENTS, UNDERGROUND UTILITIES OR OTHER SIDE FEATURE.
7. STENCILS FOR PARKING MARKINGS AVAILABLE FROM PAVEMENT STENCIL COMPANY, PHONE: (800) 250-5547, EMAIL: STENCILS@PAVEMENTSTENCIL.COM.
8. NOTE: ARCHITECTURAL SITE PLAN IS FOR REFERENCE ONLY. GC TO BUILD FROM CIVIL DRAWINGS. IF THERE IS A DISCREPANCY BETWEEN ARCHITECTURE AND CIVIL, CONTACT ARCHITECT IMMEDIATELY.
9. REFER TO CIVIL AND LANDSCAPING DRAWINGS FOR ADDITIONAL INFORMATION.
10. VERIFY ALL PAVED SURFACES ADJACENT TO BUILDING SLOPE AWAY FROM THE BUILDING TO PROVIDE POSITIVE DRAINAGE.
11. GENERAL CONTRACTOR SHALL COORDINATE UTILITIES, ALL NEW LOCATIONS AND RELOCATIONS WITH THE LOCAL UTILITY COMPANIES.
12. EXTERIOR LANDINGS TO BE FLUSH WITH INTERIOR FINISHED FLOOR AND SLOPE AWAY FROM THE FACE OF THE BUILDING AS REQUIRED BY CODE TO PROVIDE POSITIVE DRAINAGE.

KEYNOTE LEGEND

1	GENERAL DIRECTIONAL PAVEMENT MARKINGS.
2	PROVIDE AND INSTALL ONE (1) 1" CONDUIT FOR FUTURE LOOP DETECTOR - CENTER ON PICK-UP WINDOW.
3	PROVIDE ONE (1) 1" CONDUIT FOR FUTURE DIRECTIONAL SIGNAGE.
4	1,500 GALLON GREASE INTERCEPTOR - REFER TO CIVIL FOR ADDITIONAL INFORMATION
5	LOCATION OF FUTURE CLEARANCE BAR (BY TENANT).
6	12'W x 44'L HIGH DENSITY CONCRETE LOCATION; EXTEND TO 12 LINEAR FEET BEYOND THE CENTERLINE OF PICK-UP WINDOW. - REFER TO CIVIL ADDITIONAL REQUIREMENTS AND EXTENTS.
7	6" BOLLARD - REFER TO CIVIL FOR ADDITIONAL INFORMATION - PAINT PPG 'BLACK MAGIC'.
8	DASHED LINE INDICATES EXTENTS OF PROPERTY LINE.
9	SEE CIVIL DRAWINGS FOR ANY IRRIGATION AND LANDSCAPING REQUIREMENTS.
10	'DO NOT ENTER' STRIPING AND BAR LOCATION.
11	'DIGITAL PICKUP AHEAD' STRIPING.
12	ACCESSIBLE PARKING LOT STRIPING, CROSSWALK, SIGN POSTS AND SIGNS - REFER TO CIVIL FOR ADDITIONAL INFORMATION.
13	(3) PICK-UP PARKING SPACES MARKED WITH WHITE NUMBERS PARALLEL TO STRIPING AND CENTERED IN SPACE.
14	PROVIDE AND INSTALL PATIO RAILING.
15	EDGE OF PATIO SLAB.
16	TRASH ENCLOSURE, PAD, APRON AND BOLLARDS.
17	EXISTING GOODWILL PYLON SIGN.
18	PROVIDE ONE (1) 1" CONDUIT AND 22" SONOTUBE FOR FUTURE PATIO LIGHT.
19	BIKE RACK(S) - REFER TO CIVIL FOR ADDITIONAL INFORMATION.
20	(2) POLE SIGNS FOR PICK-UP PARKING SPACES BY CHIPOTLE; SIGNAGE BY SIGNAGE VENDOR.

CONSULTANT

WILKUS ARCHITECTS

CLIENT

Alliance DEVELOPMENT

FRED JACQUES
ALLIANCE DEVELOPMENT
230 OHIO ST, SUITE 200
OSHKOSH, WI 54902
(612) 313-0126

PROJECT INFORMATION

SOUTH LA CROSSE SHELL

MORMON COULEE RD & LOSEY BLVD S
LA CROSSE, WI 54601

SEAL

NOT FOR CONSTRUCTION

PROJECT NO.	2025-0394
DRAWN BY	BEH
CHECKED BY	SAS

ISSUE	DATE
PERMIT SET	01/09/2026

REVISION	DATE

TITLE:

ARCHITECTURAL SITE PLAN

SHEET NUMBER:

SP100

© COPYRIGHT WILKUS ARCHITECTS

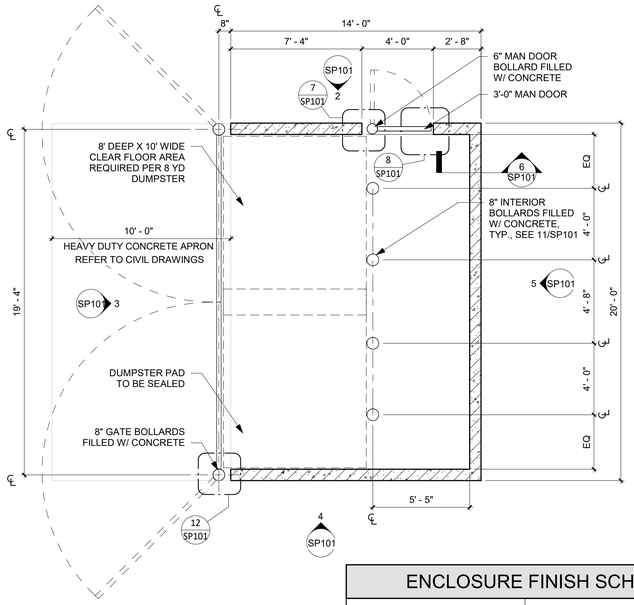

1 TRASH ENCLOSURE PLAN

SCALE: 1/4" = 1'-0"

ENCLOSURE FINISH SCHEDULE	
MATERIAL	COLOR/FINISH
CMU - PRIMER	REFER TO PAINT SPECIFICATIONS, COLOR "WHITE"
CMU	PAINTED 'KNIGHT'S ARMOR' PPG 1001-6
METAL COPING AND DOOR FRAMES	PREFINISHED BLACK
CORRUGATED METAL DOOR PANEL	GALVANIZED

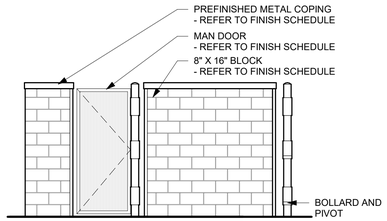

2 TRASH ENCLOSURE ELEVATION

SCALE: 1/4" = 1'-0"

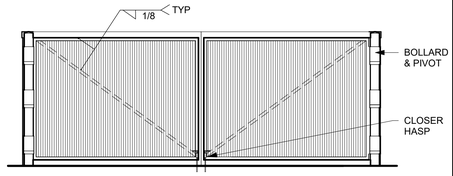

3 TRASH ENCLOSURE ELEVATION

SCALE: 1/4" = 1'-0"

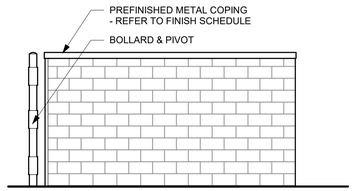

4 TRASH ENCLOSURE ELEVATION

SCALE: 1/4" = 1'-0"

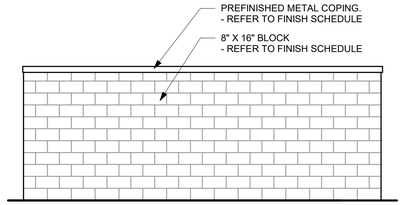

5 TRASH ENCLOSURE ELEVATION

SCALE: 1/4" = 1'-0"

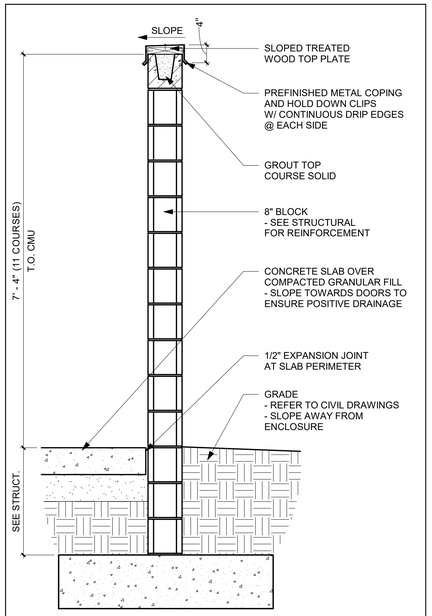

6 TYP. ENCLOSURE SECTION

SCALE: 3/4" = 1'-0"

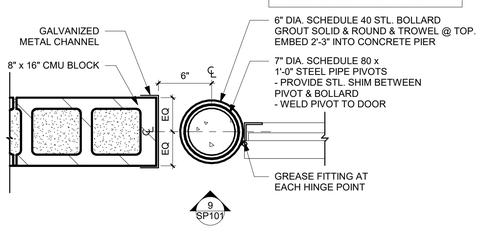

7 ENLARGED MAN DOOR PIVOT DETAIL

SCALE: 1 1/2" = 1'-0"

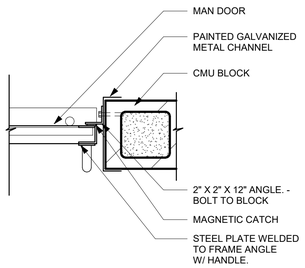

8 MAN DOOR LATCH DETAIL

SCALE: 1 1/2" = 1'-0"

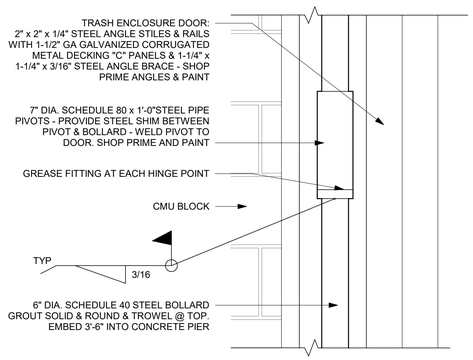

9 TRASH ENCLOSURE MAN DOOR PIVOT

SCALE: 1 1/2" = 1'-0"

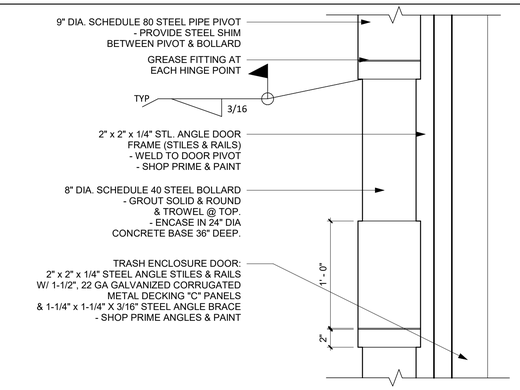

10 TRASH ENCLOSURE GATE PIVOT

SCALE: 1 1/2" = 1'-0"

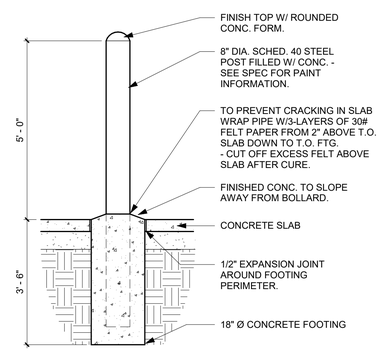

11 TYP. BOLLARD DETAIL

SCALE: 1/2" = 1'-0"

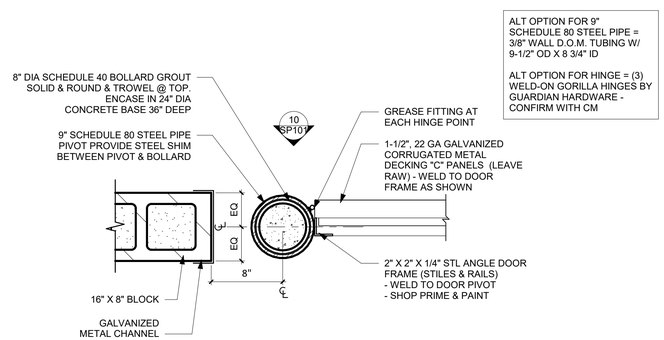

12 ENLARGED GATE PIVOT DETAIL

SCALE: 1 1/2" = 1'-0"

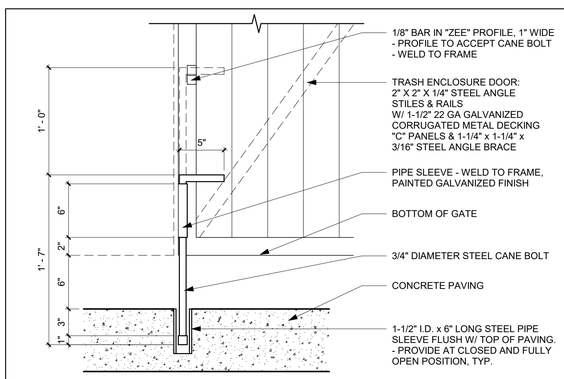

13 TYPICAL CANE BOLT DETAIL

SCALE: 1 1/2" = 1'-0"

© COPYRIGHT WILKUS ARCHITECTS

CONSULTANT

WILKUS ARCHITECTS

CLIENT

Alliance DEVELOPMENT

FRED JACQUES
ALLIANCE DEVELOPMENT
230 OHIO ST, SUITE 200
OSHKOSH, WI 54902
(612) 313-0126

PROJECT INFORMATION

SOUTH LA CROSSE SHELL

MORMON COULEE RD & LOSEY BLVD S
LA CROSSE, WI 54601

SEAL

NOT FOR CONSTRUCTION

PROJECT NO.	2025-0394
DRAWN BY	BEH
CHECKED BY	SAS

ISSUE	DATE
PERMIT SET	01/09/2026

REVISION	DATE

TITLE:

TRASH ENCLOSURE PLAN & DETAILS

SHEET NUMBER:

SP101

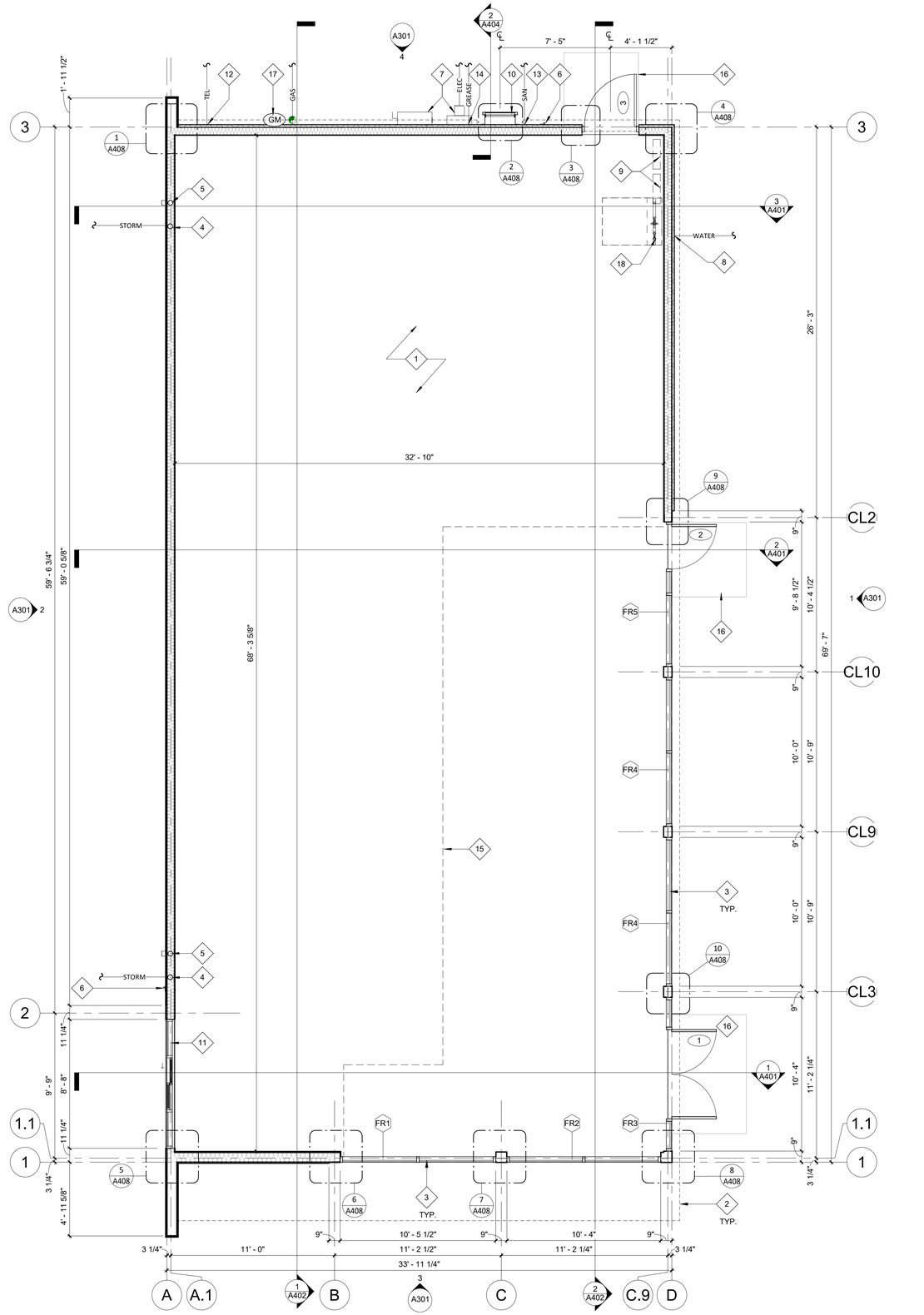

1 ARCHITECTURAL SHELL PLAN

SCALE: 1/4" = 1'-0"

GENERAL NOTES - FLOOR PLAN

1. SAFETY GLAZING SHALL BE PROVIDED AT HAZARDOUS LOCATIONS, INCLUDING, BUT NOT LIMITED TO, GLAZING WITHIN 18" OF WALKING SURFACE, GLAZING IN DOORS AND AT WINDOWS ADJACENT TO DOORS.
2. STRUCTURAL GRID DIMENSIONS ARE FROM CENTERLINE OF STRUCTURAL ELEMENTS UNLESS NOTED OTHERWISE.
3. DIMENSIONS ARE TAKEN TO OUTSIDE FACE OF SHEATHING OF WALL ASSEMBLY UNLESS NOTED OTHERWISE.
4. EXTERIOR LANDINGS SHALL BE FLUSH WITH THE INTERIOR FINISHED FLOOR SLAB AND SLOPE AWAY FROM THE FACE OF THE BUILDING TO PROVIDE POSITIVE DRAINAGE.
5. PROVIDE VERTICAL AND HORIZONTAL CONTROL JOINTS IN GYPSUM BOARD SURFACES AT 30'-0" ON CENTER MAXIMUM.
6. GENERAL CONTRACTOR TO INSTALL METAL CORNER BEADS AT OUTSIDE CORNERS OF GYPSUM BOARD SURFACES, UNLESS NOTED OTHERWISE.
7. REFER TO STRUCTURAL SHEETS FOR STUD FRAMING CONFIGURATIONS, SIZES AND SPACING.
8. USE ONLY NON-CORROSIVE FASTENERS ON PRESSURE TREATED LUMBER.
9. LAP WEATHER RESISTANT BARRIERS AND THRU-WALL FLASHING IN A WATER SHEDDING FASHION. TAPE ALL EXPOSED EDGES.
10. ALL EXTERIOR WOOD BLOCKING TO BE MOISTURE RESISTANT PRESERVATIVE TREATED (P.T.).
11. FLASHING AND SEAMS BETWEEN SHEATHING IN COMPOSITE WOOD STUD WALL CONSTRUCTION CONDITIONS TO BE TAPED AND SEALED WITH TAPE SEALANT
12. PROVIDE 5/8" TYPE X GYPSUM WALL BOARD ON INTERIOR SIDE OF ALL EXTERIOR WALLS FROM FLOOR TO BOTTOM OF ROOF DECK.
13. TAPE SEALANT AT ALL ANCHOR LOCATIONS.
14. EXTEND ALL THRU-WALL FLASHING TO 1/4 INCH PAST THE EXTERIOR FACE OF WALL.
15. PROVIDE CONTINIOUS ANCHORAGE FOR ALL THRU-WALL FLASHING.
16. EXTEND FLASHING VERTICALLY A MINIMUM OF 8 INCHES ABOVE THE BASE OF THE FLASHING.
17. APPLY SEALANT TO ALL SHEATHING JOINTS AND FASTENER PENETRATIONS.
18. PROVIDE FULLY ADHERED FLASHING AT ALL WINDOW AND DOOR OPENING HEADS, SILLS AND JAMBS
19. ALL EXIT DOORS TO BE OPERABLE FROM THE INSIDE WITHOUT SPECIAL KNOWLEDGE, KEY, OR EFFORT.
20. A READILY VISIBLE SIGN SHALL BE ADJACENT TO THE MAIN PUBLIC DOORWAY STATING, "THIS DOOR TO REMAIN UNLOCKED DURING BUISNESS HOURS".
21. GAS PIPING ON THE EXTERIOR, UNDER FLOOR, AND BELOW EXISTINGROOF/ CEILING, ASSEMBLY SHALL BE GALVANIZED.

KEYNOTE LEGEND

1	FULL SLAB LEAVE-OUT - COMPACT SUB-GRADE AS REQUIRED. FUTURE CONCRETE SLAB AND VAPOR BARRIER TO BE PROVIDED BY TENANT.
2	LINE OF OVERHANG ABOVE.
3	THERMALLY BROKEN ALUMINUM STOREFRONT SYSTEM WITH 1" INSULATED GLAZING - CAULK AROUND ENTIRE PERIMETER OF OPENINGS EACH SIDE.
4	INTERIOR ROOF DRAIN LEADER - CONNECT TO STORM SEWER BELOW GRADE.
5	INTERIOR OVERFLOW ROOF DRAIN LEADER WITH STAINLESS STEEL COWS TONGUE.
6	FROST PROOF WALL HYDRANT.
7	ELECTRICAL METER AND DISCONNECT.
8	DOMESTIC WATER SERVICE ENTRY POINT - COORDINATE WITH CIVIL DRAWINGS FOR ADDITIONAL INFORMATION.
9	FUTURE TENANT ELECTRICAL PANELBOARDS - GENERAL CONTRACTOR TO PROVIDE CONDUCTORS TO LOCATION.
10	EXTERIOR ROOF LADDER WITH LOCKING GATE
11	PREFINISHED DARK BRONZE ALUMINUM PASS-THRU WINDOW WITH INTEGRATED INTERIOR AIR CURTAIN, TRANSOM AND SIDELITES - CAULK AROUND ENTIRE PERIMETER OF OPENING EACH SIDE.
12	TELECOMMUNICATION ENTRY POINT - COORDNIATE WITH CIVIL DRAWINGS FOR ADDITIONAL INFORMATION.
13	SANITARY SEWER ENTRY POINT - COORDNIATE WITH CIVIL DRAWINGS FOR ADDITIONAL INFORMATION.
14	GREASE WASTE ENTRY POINT - COORDINATE WITH CIVIL DRAWINGS FOR ADDITIONAL INFORMATION.
15	DASHED LINE INDICATES LOCATION OF FUTURE OPEN CEILING ABOVE - EXPOSED STRUCTURE TO BE FREE AND CLEAR OF MARKINGS. REFER TO TENANT DRAWINGS FOR EXACT DIMENSIONS.
16	CAST-IN-PLACE CONCRETE ENTRY STOOP - LIGHT BROOM FINISH - SLOPE STOOP 1/4" PER 12" AWAY FROM BUILDING - SEE STRUCTURAL FOR ADDITIONAL INFORMATION.
17	LOCATION OF GAS METER - COORDINATE WITH CIVIL DRAWINGS FOR ADDITIONAL INFORMATION.
18	BACKFLOW PREVENTER WITH SHUT-OFF BALL VALVE FOR TENANT'S PREMISES.

CONSULTANT

WILKUS ARCHITECTS

CLIENT

Alliance DEVELOPMENT

FRED JACQUES
ALLIANCE DEVELOPMENT
230 OHIO ST, SUITE 200
OSHKOSH, WI 54902
(612) 313-0126

PROJECT INFORMATION

SOUTH LA CROSSE SHELL

MORMON COULEE RD & LOSEY BLVD S
LA CROSSE, WI 54601

SEAL

NOT FOR CONSTRUCTION

PROJECT NO.	2025-0394
DRAWN BY	BEH
CHECKED BY	SAS

ISSUE	DATE
PERMIT SET	01/09/2026

REVISION	DATE

TITLE:

ARCHITECTURAL SHELL PLAN

SHEET NUMBER:

A100

© COPYRIGHT WILKUS ARCHITECTS

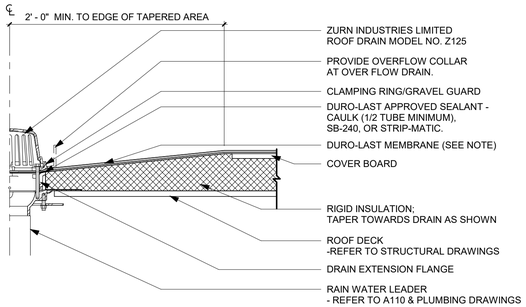

NOTE:
DURO-LAST MEMBRANE MUST EXTEND BEHOND THE INSIDE OF THE CLAMPING RING.
BE SURE THE OPENING WHERE WATER PASSES THROUGH THE MEMBRANE IS NOT
SMALLER THAN THE OPENING OF THE DRAIN.

2 ROOF DRAIN DETAIL

SCALE: 1 1/2" = 1'-0"

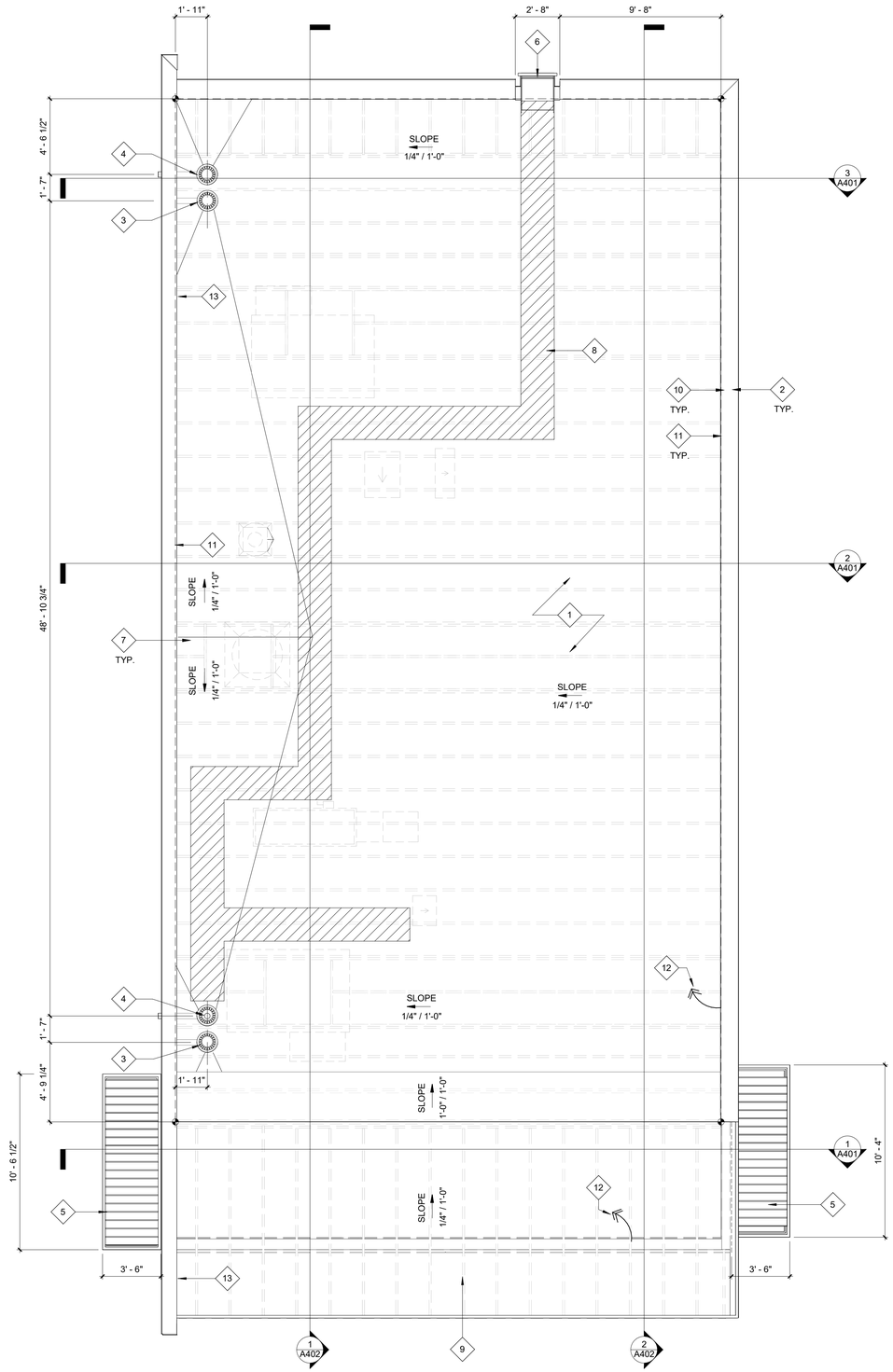

1 ROOF PLAN

SCALE: 1/4" = 1'-0"

GENERAL ROOF PLAN

1.	REFER TO STRUCTURAL DRAWINGS FOR ROOF FRAMING INFORMATION.
2.	DASHED LINES INDICATE APPROXIMATE LOCATIONS OF FUTURE EQUIPMENT SUPPLIED AND INSTALLED BY FUTURE TENANT - FINAL LOCATIONS MAY VARY.
3.	DIMENSIONS ARE FROM THE INSIDE FACE OF PARAPET UNLESS NOTED OTHERWISE.
4.	ROOFING DETAILS INCLUDING CANTS, FLASHING, BLOCKING AND EXPANSION JOINTS ARE TO BE INSTALLED PER MANUFACTURER'S DETAILS, STANDARDS AND RECOMMENDATIONS.
5.	GENERAL CONTRACTOR IS RESPONSIBLE FOR KEEPING ROOF CLEAN OF DEBRIS OVER DURATION OF PROJECT.
6.	COORDINATE ALL ROOF PENETRATIONS, FLASHING, AND REPAIR W/ TENANT ROOF TOP EQUIPMENT PRIOR TO COMMENCEMENT OF WORK.

KEYNOTE LEGEND

1	FULLY ADHERED THERMOPLASTIC MEMBRANE (PVC) ROOFING SYSTEM OVER BASE RIGID INSULATION AND A/C FINISH GRADE PLYWOOD DECK (A-GRADE FINISH FACING DOWN) - SEE WALL SECTIONS FOR INSULATION THICKNESS REQUIREMENTS - REFER TO SPECIFICATIONS FOR ADDITIONAL INFORMATION.
2	24 GAUGE PREFINISHED METAL CAP FLASHING - SLOPE AWAY FROM BUILDING FACE.
3	PRIMARY ROOF DRAIN LEADER ROUTED BELOW AND THROUGH TRUSS SPACE INTO ADJACENT STUD WALL AND DOWN - INSULATE ANY HORIZONTAL RUNS - REFER TO PLUMBING FOR ADDITIONAL INFORMATION - REFER TO CIVIL DRAWINGS FOR STORM WATER CONNECTION INFORMATION.
4	OVERFLOW ROOF DRAIN LEADER ROUTED BELOW AND THROUGH TRUSS SPACE INTO ADJACENT STUD WALL AND DOWN - INSULATE ANY HORIZONTAL RUNS - REFER TO PLUMBING FOR ADDITIONAL INFORMATION - REFER TO CIVIL DRAWINGS FOR STORM WATER CONNECTION INFORMATION.
5	PREFINISHED METAL CANOPY WITH INTEGRAL LIGHTING - DIMENSIONS PROVIDED ARE FROM FACE OF LOWER FACADE. COLOR: MATCH STOREFRONT. - FIELD VERIFY DIMENSIONS WITH INSTALLED STEEL DIMENSIONS.
6	EXTERIOR ROOF LADDER WITH LOCKING GATE. SEE WALL SECTIONS FOR ADDITIONAL INFORMATION.
7	PROVIDE TAPERED INSULATION CRICKETS TO ROOF DRAINS AS REQUIRED.
8	HATCH INDICATES EXTENTS OF FUTURE ROOF TOP MOUNTED SERVICE WALKWAY PADS - GENERAL CONTRACTOR TO INSTALL AFTER FUTURE EQUIPMENT HAS BEEN PLACED.
9	FULLY ADHERED THERMOPLASTIC MEMBRANE (PVC) ROOFING SYSTEM OVER PLYWOOD DECKING - PROVIDE ATTIC BATT INSULATION BELOW ROOF OVERHANG - SEE WALL SECTIONS FOR INSULATION THICKNESS REQUIREMENTS.
10	PROVIDE 1/2" EXTERIOR GRADE PLYWOOD SHEATHING AT INSIDE FACE OF PARAPET.
11	WRAP ROOFING MEMBRANE UP AND OVER INTERIOR FACE OF PARAPET.
12	J-BOX AND WHIP LOCATIONS FOR FUTURE SIGNAGE LOCATIONS - COORDINATE ALL SPECIFIC POWER REQUIREMENTS WITH SIGNAGE VENDOR PRIOR TO INSTALLATION.
13	THIN BRICK ON BACK SIDE OF PARAPET WALL - REFER TO EXTERIOR ELEVATIONS FOR EXTENTS.

CONSULTANT

WILKUS ARCHITECTS

CLIENT

Alliance DEVELOPMENT

FRED JACQUES
ALLIANCE DEVELOPMENT
230 OHIO ST, SUITE 200
OSHKOSH, WI 54902
(612) 313-0126

PROJECT INFORMATION

SOUTH LA CROSSE SHELL

MORMON COULEE RD & LOSEY BLVD S
LA CROSSE, WI 54601

SEAL

NOT FOR CONSTRUCTION

PROJECT NO.	2025-0394
DRAWN BY	BEH
CHECKED BY	SAS

ISSUE	DATE
PERMIT SET	01/09/2026

REVISION	DATE

TITLE:
ARCHITECTURAL ROOF PLAN

SHEET NUMBER:
A140

© COPYRIGHT WILKUS ARCHITECTS

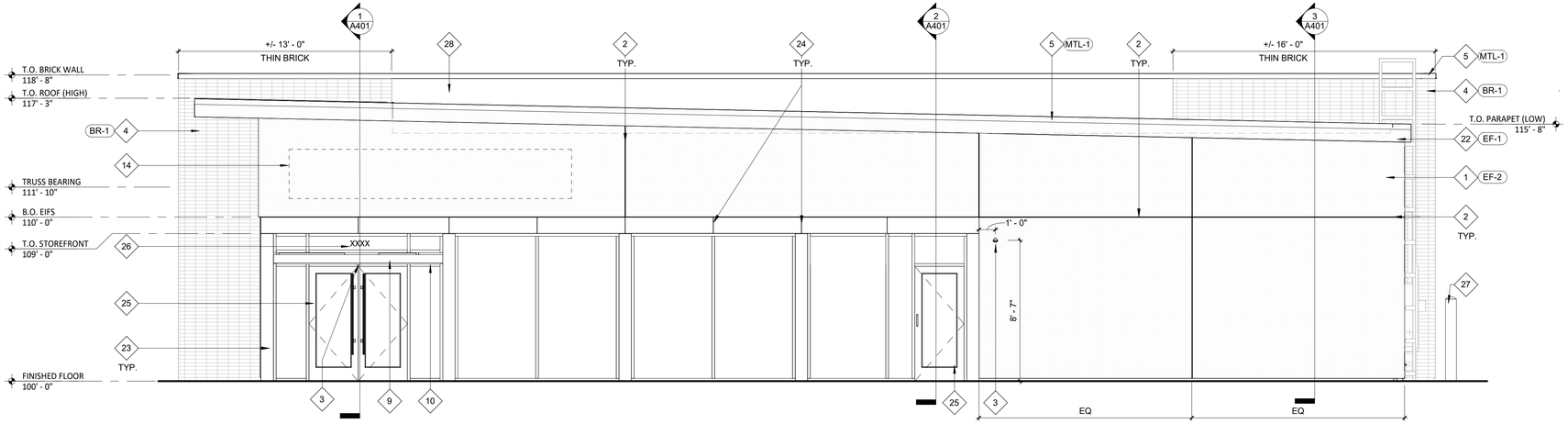

1 EXTERIOR ELEVATION

SCALE: 1/4" = 1'-0"

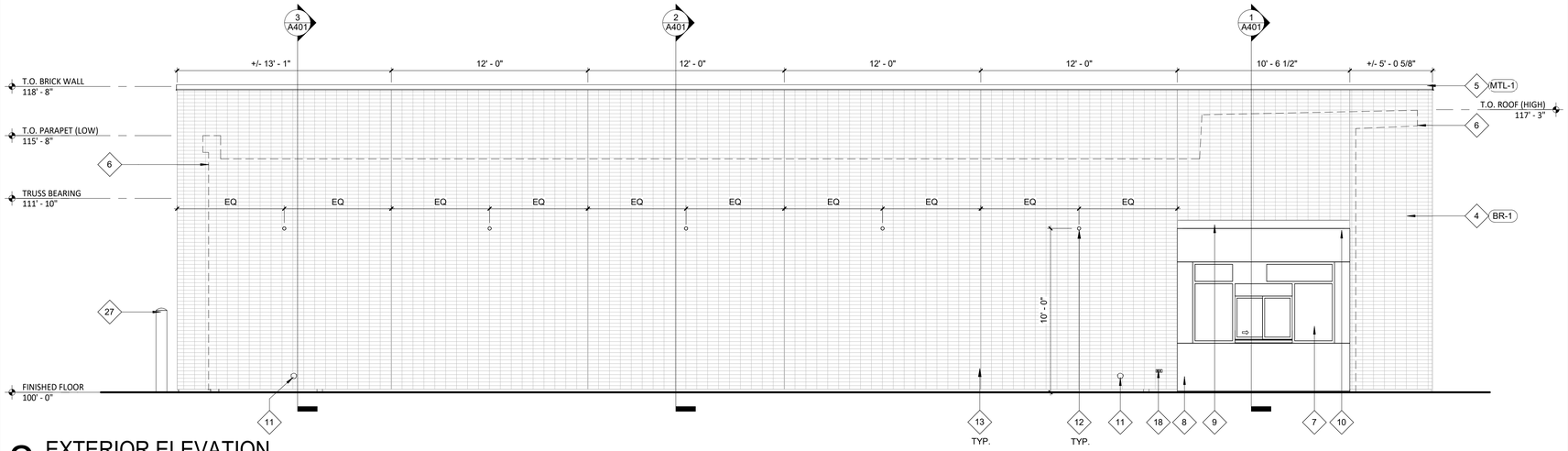

2 EXTERIOR ELEVATION

SCALE: 1/4" = 1'-0"

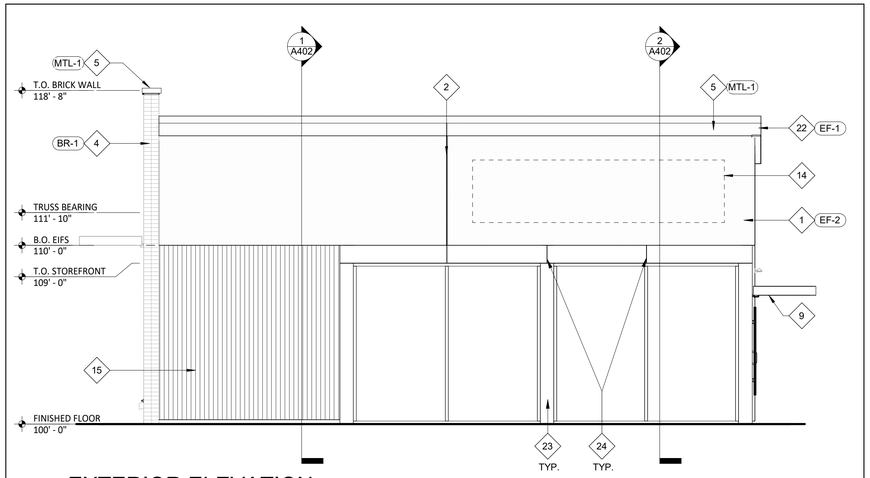

3 EXTERIOR ELEVATION

SCALE: 1/4" = 1'-0"

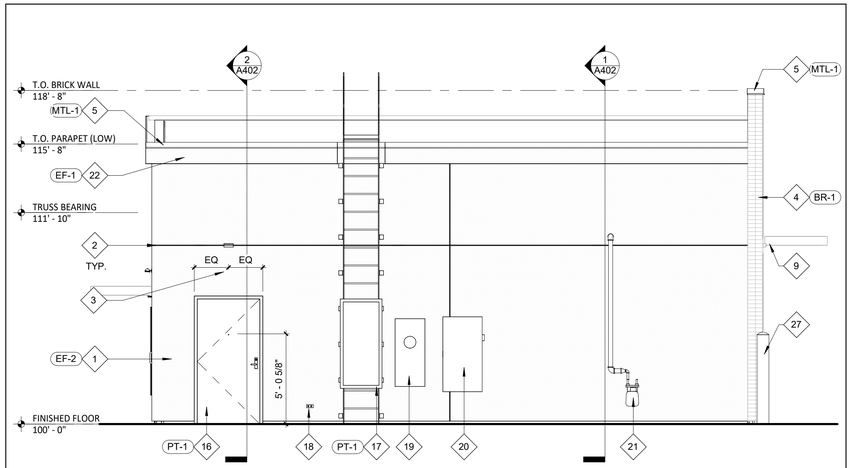

4 EXTERIOR ELEVATION

SCALE: 1/4" = 1'-0"

EXT ELEV GENERAL NOTES

1. PAINT ANY ALLOWABLE UTILITY BOXES AND LINES 'PEGASUS'
2. EXTERIOR SIGNAGE PROVIDED BY TSV AND INSTALLED BY TSV. GC TO MAKE FINAL CONNECTION.
3. EXTERIOR SIGNAGE LOCATIONS, SIZES, AND DESCRIPTIONS SHOWN FOR REFERENCE ONLY. PERMIT AND INSTALL BY OTHERS.
4. PROVIDE BLOCKING, SUPPORTS, AND UTILITIES FOR EXTERIOR SIGNAGE AS REQUIRED.
5. METAL CANOPY IS AVAIABLE FROM AMERICAN PRODUCTS, INC. (API), PHONE: (813)-925-0144, EMAIL: BIDS@AMERICANPROD.COM

KEYNOTE LEGEND

1	EIFS - COLOR TO MATCH PPG 'PEGASUS' - REFER TO SPECIFICATIONS FOR ADDITIONAL INFORMATION.
2	EIFS CONTROL JOINT - REFER TO MANUFACTURER'S RECOMMENDATION FOR SPACING REQUIREMENTS.
3	EXTERIOR EMERGENCY LIGHT - SEE ELECTRICAL FOR FURTHER INFORMATION.
4	THIN BRICK VENEER - STACKED BOND - REFER TO SPECIFICATIONS FOR ADDITIONAL INFORMATION.
5	PREFINISHED BLACK METAL COPING.
6	DASHED LINE INDICATES BUILDING OUTLINE BEYOND.
7	PREFINISHED DARK BRONZE ALUMINUM PASS-THRU WINDOW WITH INTEGRATED INTERIOR AIR CURTAIN, TRANSOM AND SIDELITES - CAULK AROUND ENTIRE PERIMETER OF OPENING.
8	PREFINISHED BLACK FLUSH METAL PANELS - SEE SPECIFICATIONS FOR FURTHER INFORMATION.
9	PREFINISHED METAL CANOPY W/ INTEGRAL LED LIGHTING CHANNEL - COLOR TO MATCH STOREFRONT - SEE SPECIFICATIONS FOR FURTHER INFORMATION.
10	LED CHANNEL LIGHT - LENGTH TO MATCH CANOPY - SEE ELECTRICAL FOR FURTHER INFORMATION.
11	STAINLESS STEEL COW TONGUE OVERFLOW ROOF DRAIN DISCHARGE - SEE PLUMBING FOR FURTHER INFORMATION.
12	WALL PACK LIGHT - SEE ELECTRICAL FOR FURTHER INFORMATION.
13	MASONRY CONTROL JOINTS - REFER TO MANUFACTURER'S RECOMMENDATIONS FOR SPACING REQUIREMENTS
14	DASHED AREA INDICATES EXTENTS OF BLOCKING FOR FUTURE TENANT SIGNAGE - PROVIDE ELECTRICAL ACCESS AS REQUIRED - COORDINTE ADDITIONAL REQUIREMENTS WITH TENANT SIGNAGE VENDOR.
15	PREFINISHED BLACK RIBBED METAL PANELS - SEE SPECIFICATIONS FOR FURTHER INFORMATION.
16	INSULATED HOLLOW METAL DOOR AND FRAME - CAULK AROUND ENTIRE PERIMETER OF OPENING - PAINT DOOR AND FRAME BLACK.
17	EXTERIOR ROOF LADDER WITH LOCKING GATE - PAINT BLACK.
18	FROST PROOF WALL HYDRANT - SEE PLUMBING FOR FURTHER INFORMATION.
19	ELECTRICAL METER - SEE ELECTRICAL FOR FURTHER INFORMATION.
20	ELECTRICAL FUSED DISCONNECT SWITCH - SEE ELECTRICAL FOR FURTHER INFORMATION.
21	GAS METER - SEE PLUMBING FOR FURTHER INFORMATION.
22	EIFS - COLOR TO MATCH PPG 'BLACK MAGIC' - REFER TO SPECIFICATIONS FOR ADDITIONAL INFORMATION.
23	PREFINISHED BRAKE METAL - COLOR TO MATCH STOREFRONT.
24	BRAKE METAL SEAM LOCATION - MAINTAIN ALIGNMENT WITH ADJACENT FINISHES.
25	THERMALLY BROKEN PREFINISHED BLACK ALUMINUM STOREFRONT SYSTEM WITH 1" INSULATED GLAZING - CAULK AROUND ENTIRE PERIMETER OF OPENINGS.
26	6" HIGH VINYL BUILDING ADDRESS NUMBERS - COORDINATE REQUIREMENTS WITH AUTHORITIES HAVING JURISDICTION.
27	8" CONCRETE SAFETY BOLLARD.
28	DARK GREY ROOFING MEMBRANE AT BACK SIDE OF PARAPET WALL.

EXTERIOR FINISH SCHEDULE

FINISH	MATERIAL	COLOR	REMARKS
BR-1	ENDICOTT THIN BRICK	SIENNA IRONSPOT SMOOTH	STACKED BOND, SEE SPECS FOR GROUT COLOR
EF-1	EIFS	MATCH PT-1	FLAT FINISH
EF-2	EIFS	MATCH PT-2	FLAT FINISH
MTL-1	PREFINISHED METAL COPING	MATCH PT-1	TO MATCH ADJACENT FINISH
PT-1	PAINT	PPG #1001-7 "BLACK MAGIC"	
PT-2	PAINT	PPG #1010-1 "PEGASUS"	

CONSULTANT

WILKUS ARCHITECTS

CLIENT

Alliance DEVELOPMENT

FRED JACQUES
ALLIANCE DEVELOPMENT
230 OHIO ST, SUITE 200
OSHKOSH, WI 54902
(612) 313-0126

PROJECT INFORMATION

SOUTH LA CROSSE SHELL

MORMON COULEE RD & LOSEY BLVD S
LA CROSSE, WI 54601

SEAL

NOT FOR CONSTRUCTION

PROJECT NO.	2025-0394
DRAWN BY	BEH
CHECKED BY	SAS

ISSUE	DATE
PERMIT SET	01/09/2026

REVISION	DATE

TITLE:

EXTERIOR ELEVATIONS

SHEET NUMBER:

A301

© COPYRIGHT WILKUS ARCHITECTS

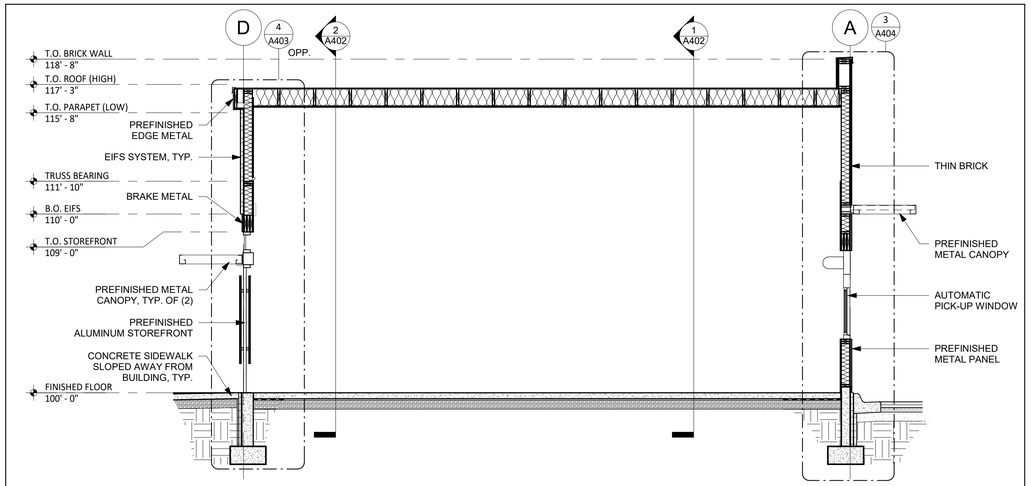

1 BUILDING SECTION

SCALE: 1/4" = 1'-0"

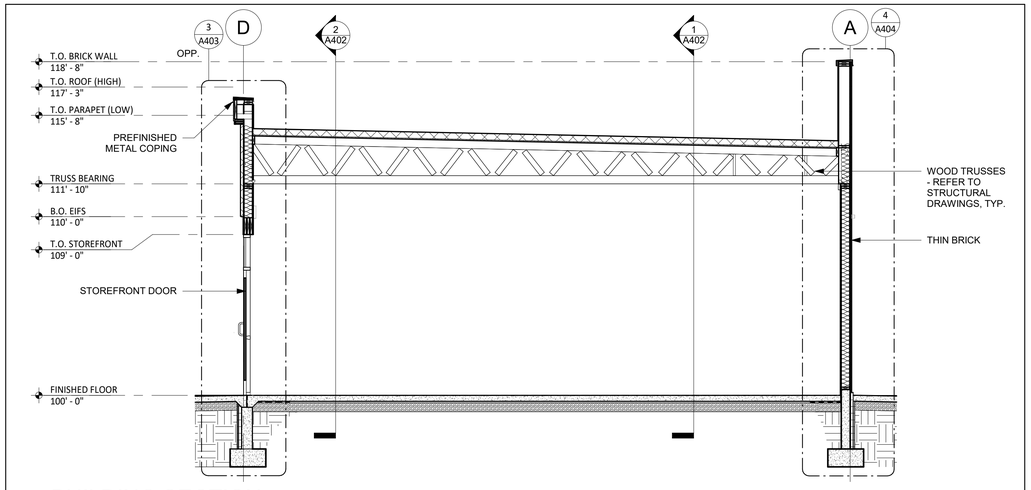

2 BUILDING SECTION

SCALE: 1/4" = 1'-0"

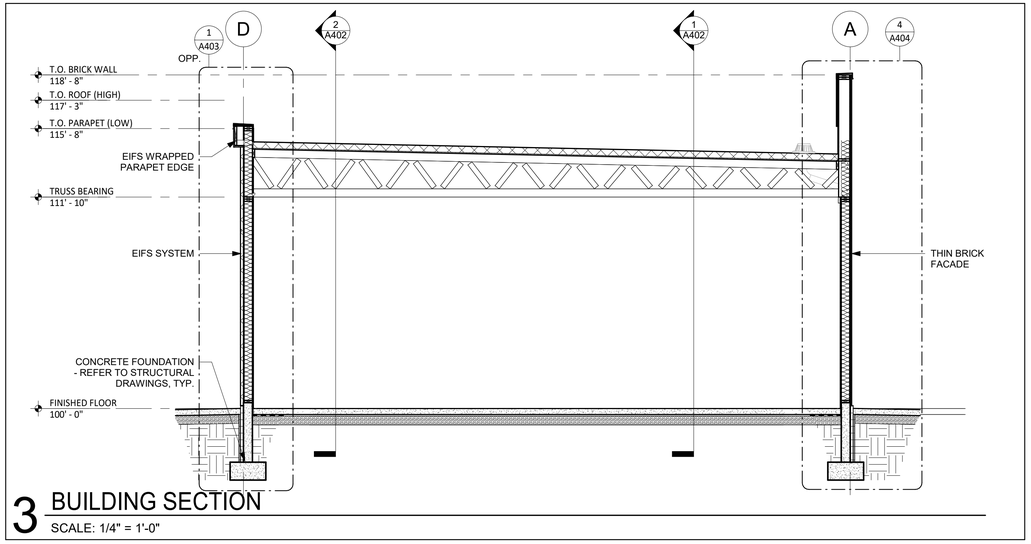

3 BUILDING SECTION

SCALE: 1/4" = 1'-0"

© COPYRIGHT WILKUS ARCHITECTS

CONSULTANT

WILKUS ARCHITECTS

CLIENT

Alliance DEVELOPMENT

FRED JACQUES
ALLIANCE DEVELOPMENT
230 OHIO ST, SUITE 200
OSHKOSH, WI 54902
(612) 313-0126

PROJECT INFORMATION

SOUTH LA CROSSE SHELL

MORMON COULEE RD & LOSEY BLVD S
LA CROSSE, WI 54601

SEAL

NOT FOR CONSTRUCTION

PROJECT NO.	2025-0394
DRAWN BY	BEH
CHECKED BY	SAS

ISSUE	DATE
PERMIT SET	01/09/2026

REVISION	DATE

TITLE:

BUILDING SECTIONS

SHEET NUMBER

A401

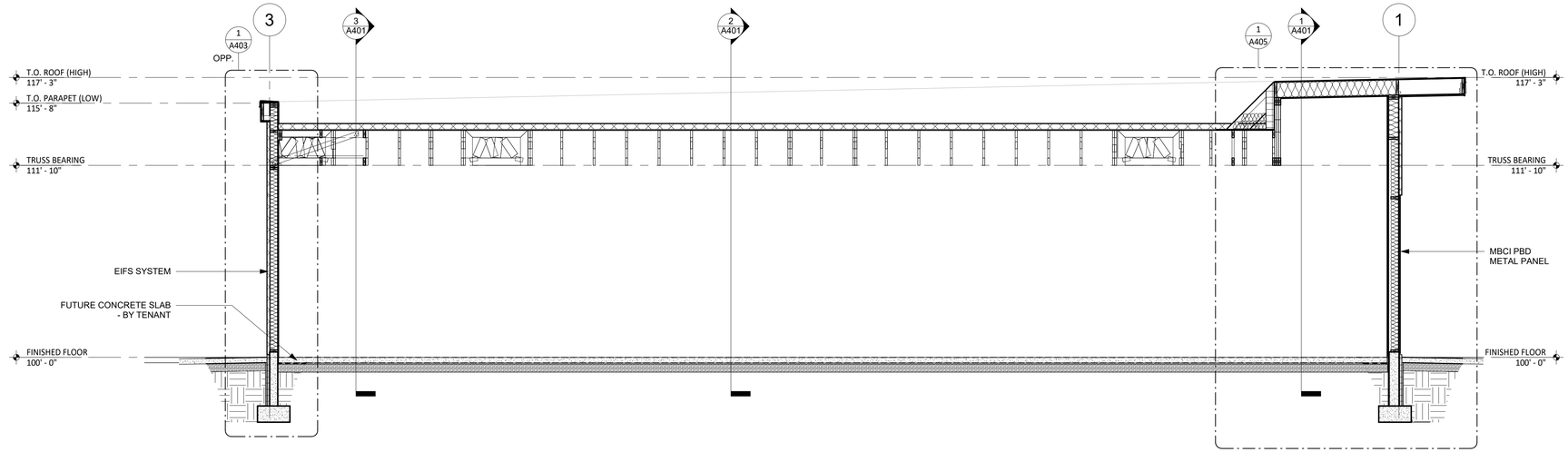

1 BUILDING SECTION

SCALE: 1/4" = 1'-0"

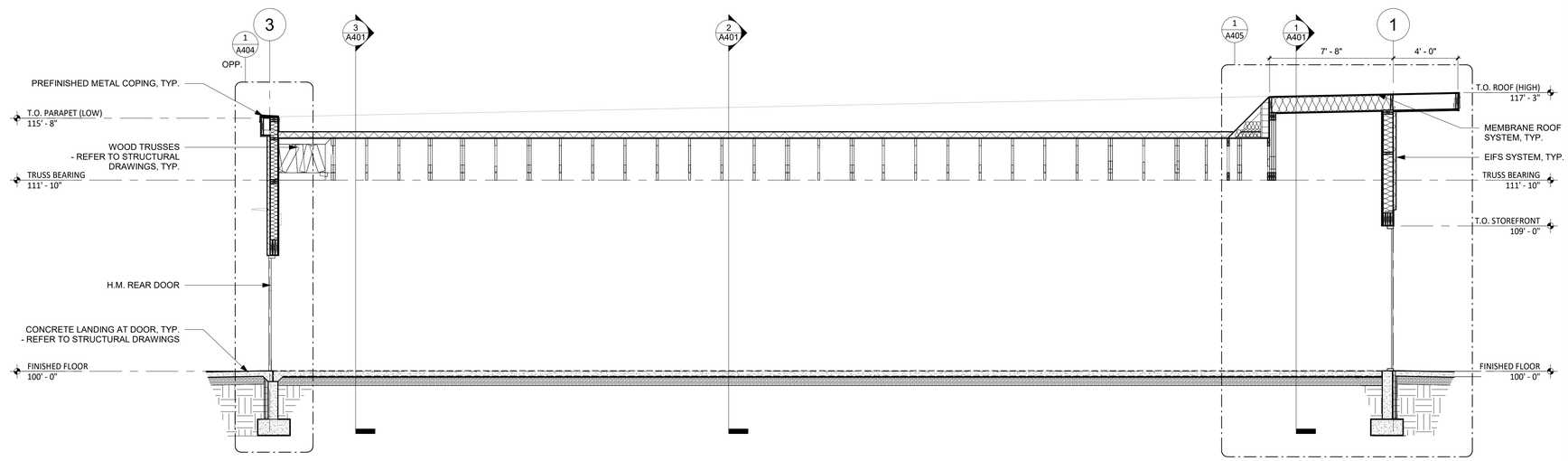

2 BUILDING SECTION

SCALE: 1/4" = 1'-0"

CONSULTANT

WILKUS ARCHITECTS

CLIENT

Alliance DEVELOPMENT

FRED JACQUES
ALLIANCE DEVELOPMENT
230 OHIO ST, SUITE 200
OSHKOSH, WI 54902
(612) 313-0126

PROJECT INFORMATION

SOUTH LA CROSSE SHELL

MORMON COULEE RD & LOSEY BLVD S
LA CROSSE, WI 54601

SEAL

NOT FOR CONSTRUCTION

PROJECT NO.	2025-0394
DRAWN BY	BEH
CHECKED BY	SAS

ISSUE	DATE
PERMIT SET	01/09/2026

REVISION	DATE

TITLE:

BUILDING SECTIONS

SHEET NUMBER:

A402

© COPYRIGHT WILKUS ARCHITECTS

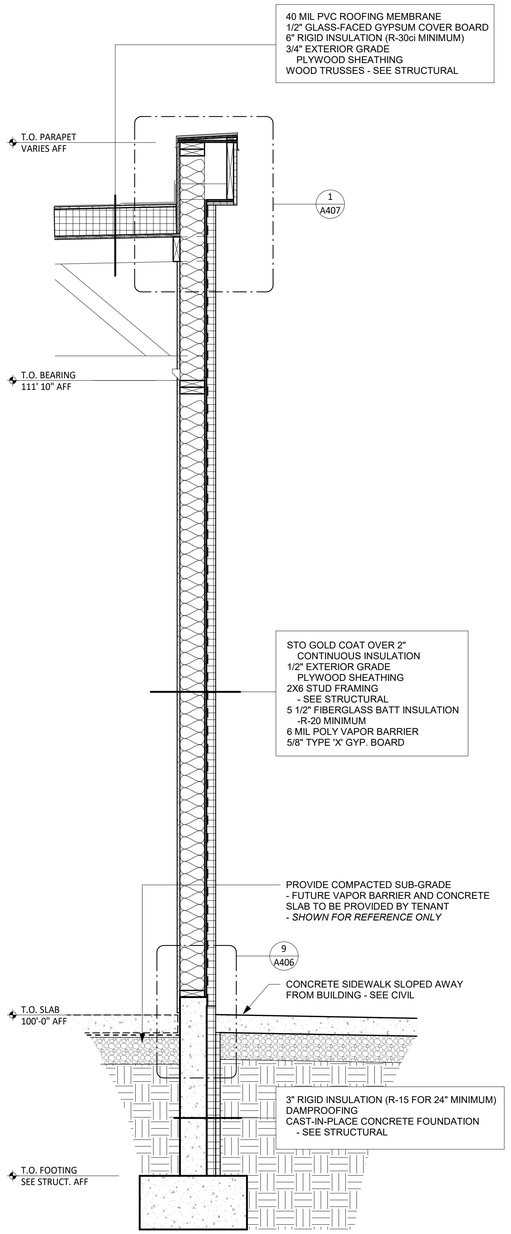

1 SECTION @ WALL - TYPICAL

SCALE: 3/4" = 1'-0"

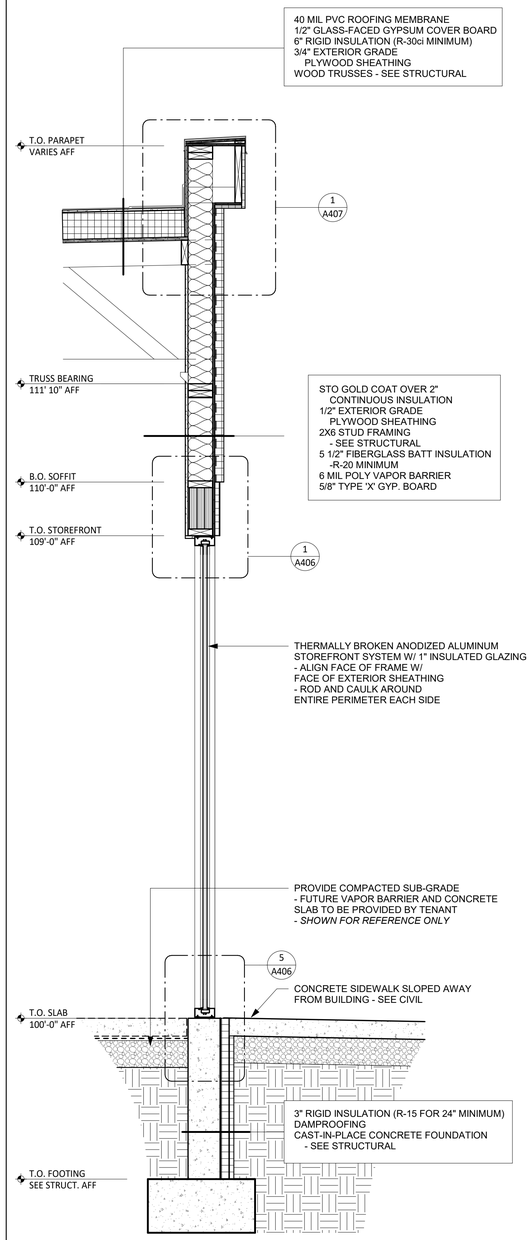

2 SECTION @ STOREFRONT GLAZING

SCALE: 3/4" = 1'-0"

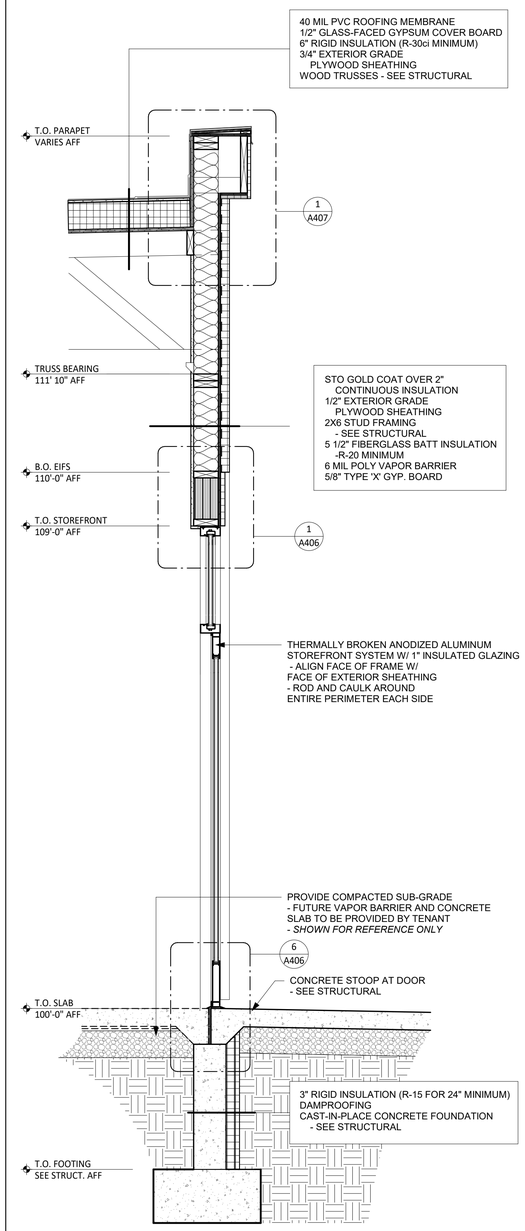

3 SECTION @ SIDE EGRESS

SCALE: 3/4" = 1'-0"

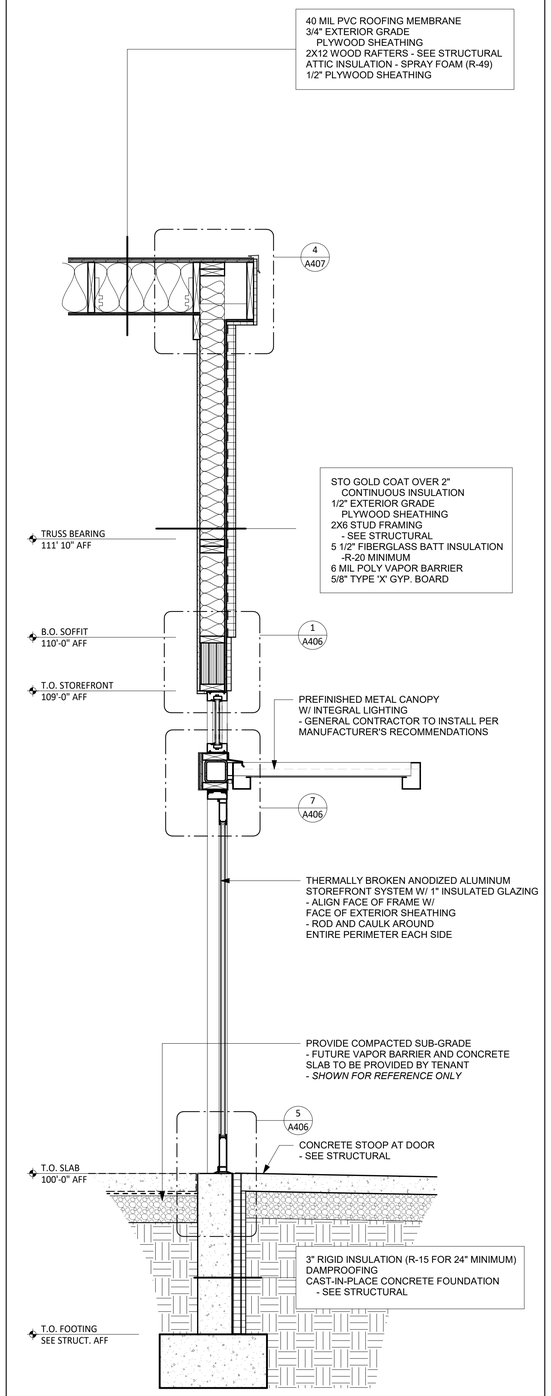

4 SECTION @ MAIN ENTRY

SCALE: 3/4" = 1'-0"

© COPYRIGHT WILKUS ARCHITECTS

CONSULTANT

WILKUS ARCHITECTS

CLIENT

Alliance DEVELOPMENT

FRED JACQUES
ALLIANCE DEVELOPMENT
230 OHIO ST, SUITE 200
OSHKOSH, WI 54902
(612) 313-0126

PROJECT INFORMATION

SOUTH LA CROSSE SHELL

MORMON COULEE RD & LOSEY BLVD S
LA CROSSE, WI 54601

SEAL

NOT FOR CONSTRUCTION

PROJECT NO.	2025-0394
DRAWN BY	BEH
CHECKED BY	SAS

ISSUE	DATE
PERMIT SET	01/09/2026

REVISION	DATE

TITLE:

WALL SECTIONS

SHEET NUMBER:

A403

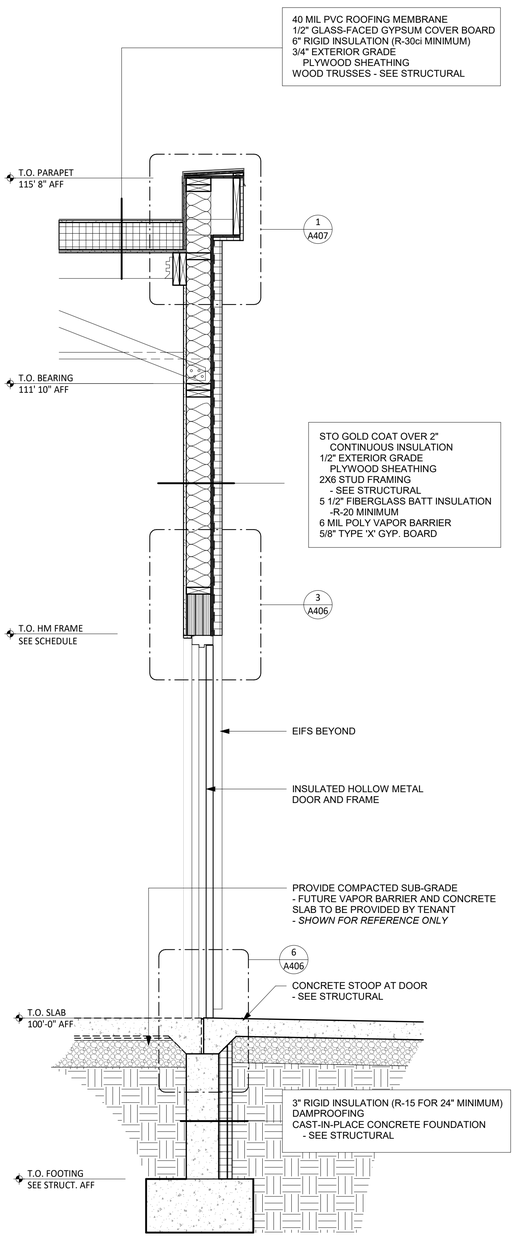

1 SECTION @ REAR SERVICE EGRESS

SCALE: 3/4" = 1'-0"

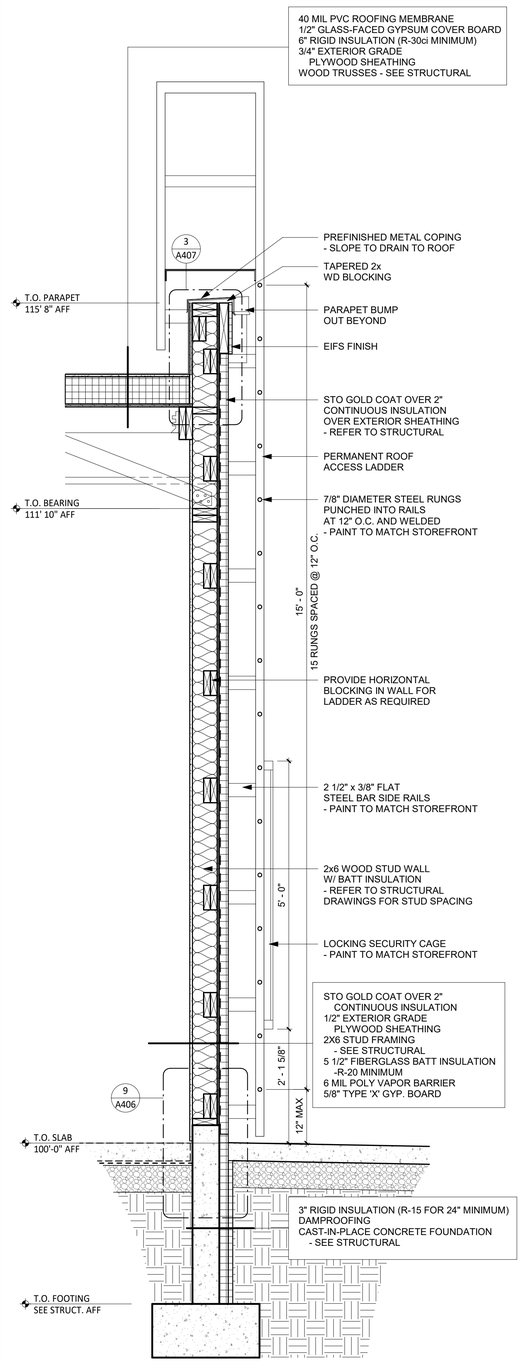

2 SECTION @ ROOF LADDER

SCALE: 3/4" = 1'-0"

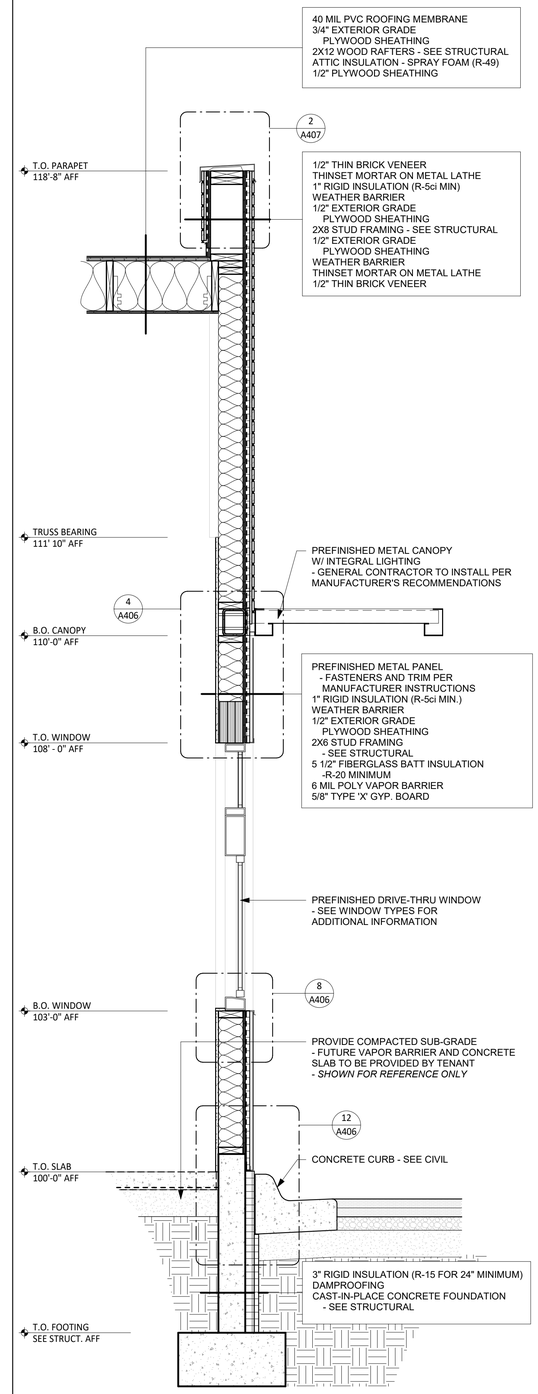

3 SECTION @ DRIVE-THRU

SCALE: 3/4" = 1'-0"

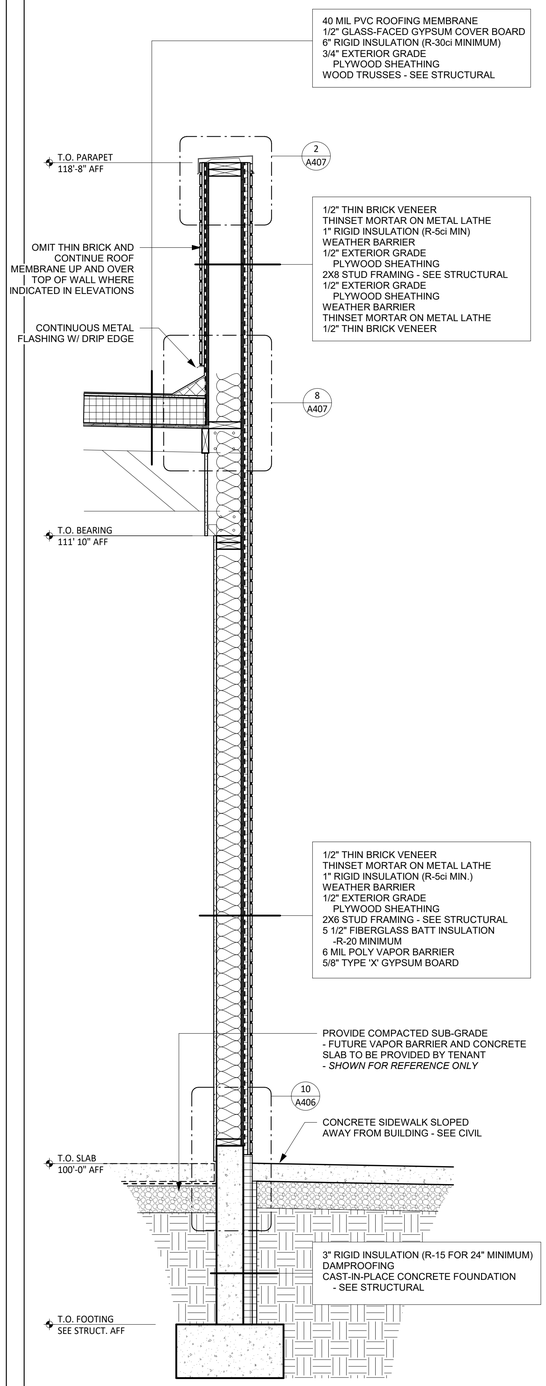

4 SECTION @ BRICK WALL

SCALE: 3/4" = 1'-0"

© COPYRIGHT WILKUS ARCHITECTS

CONSULTANT

WILKUS ARCHITECTS

CLIENT

Alliance DEVELOPMENT

FRED JACQUES
ALLIANCE DEVELOPMENT
230 OHIO ST, SUITE 200
OSHKOSH, WI 54902
(612) 313-0126

PROJECT INFORMATION

SOUTH LA CROSSE SHELL

MORMON COULEE RD & LOSEY BLVD S
LA CROSSE, WI 54601

SEAL

NOT FOR CONSTRUCTION

PROJECT NO.	2025-0394
DRAWN BY	BEH
CHECKED BY	SAS

ISSUE	DATE
PERMIT SET	01/09/2026

REVISION	DATE

TITLE:

WALL SECTIONS

SHEET NUMBER

A404

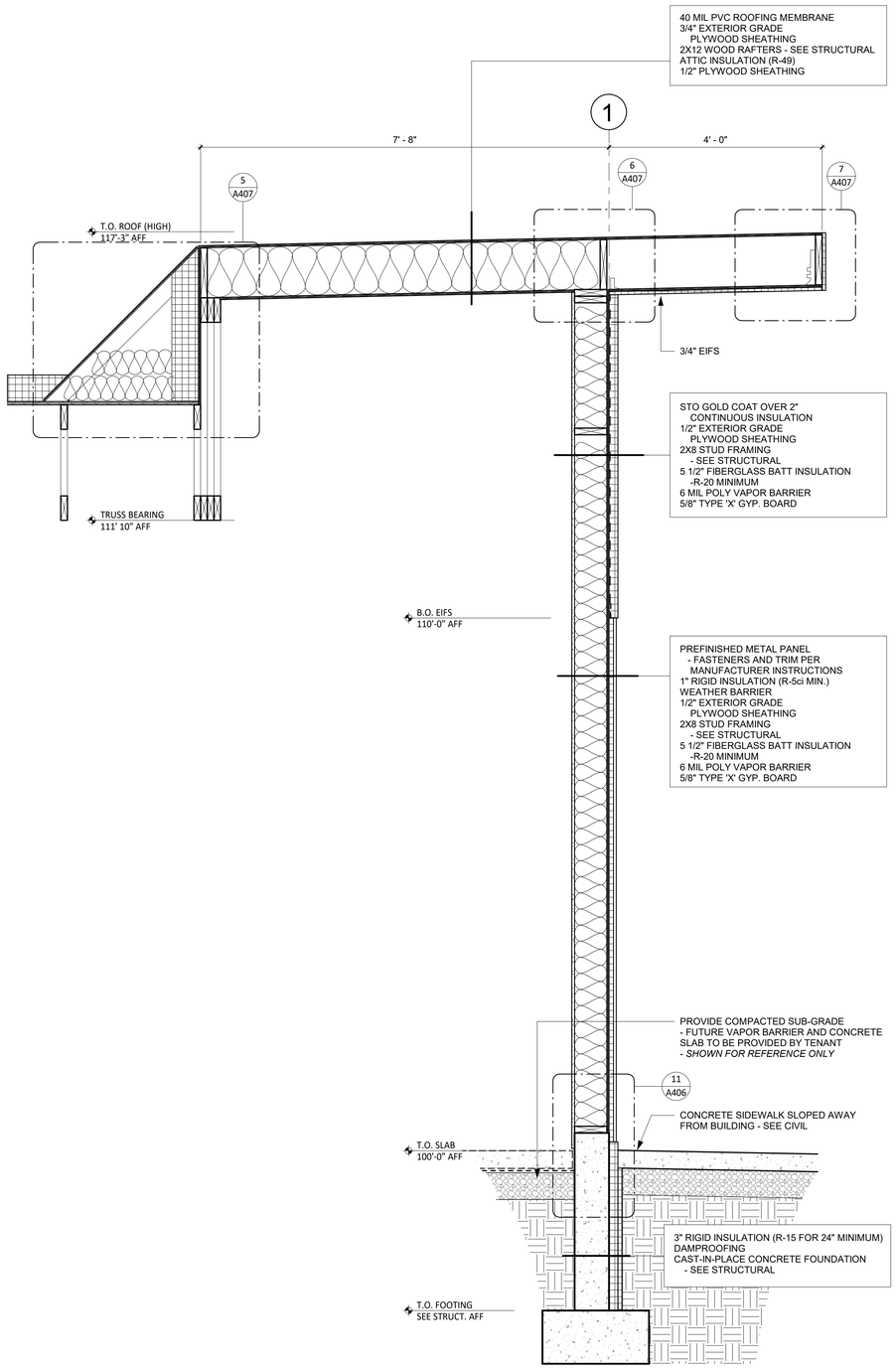

1 SECTION @ METAL PANEL

SCALE: 3/4" = 1'-0"

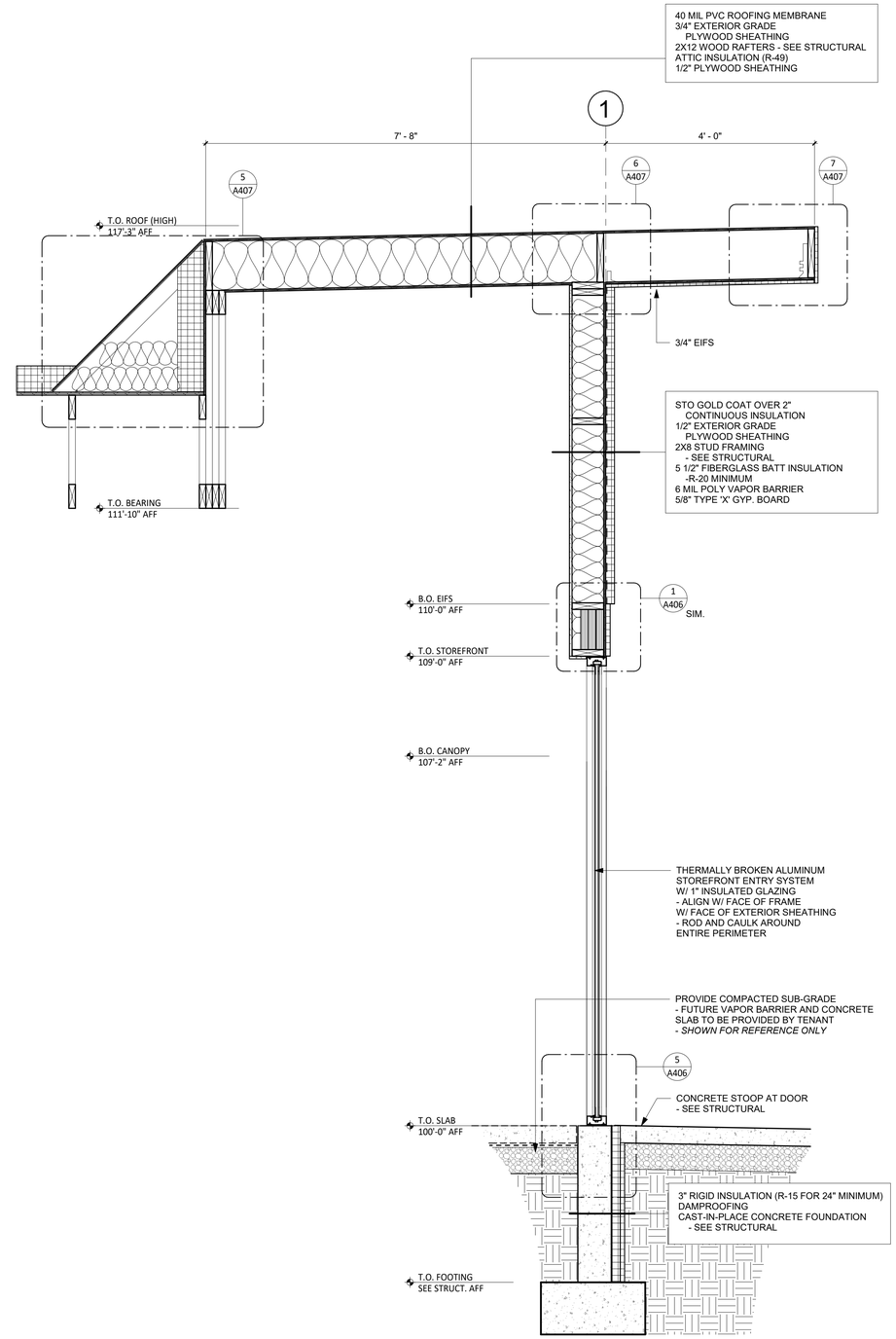

2 SECTION @ MAIN ENTRY

SCALE: 3/4" = 1'-0"

© COPYRIGHT WILKUS ARCHITECTS

CONSULTANT

WILKUS ARCHITECTS

CLIENT

Alliance DEVELOPMENT

FRED JACQUES
ALLIANCE DEVELOPMENT
230 OHIO ST, SUITE 200
OSHKOSH, WI 54902
(612) 313-0126

PROJECT INFORMATION

SOUTH LA CROSSE SHELL

MORMON COULEE RD & LOSEY BLVD S
LA CROSSE, WI 54601

SEAL

NOT FOR CONSTRUCTION

PROJECT NO.	2025-0394
DRAWN BY	BEH
CHECKED BY	SAS

ISSUE	DATE
PERMIT SET	01/09/2026

REVISION	DATE

TITLE:

WALL SECTIONS

SHEET NUMBER:

A405

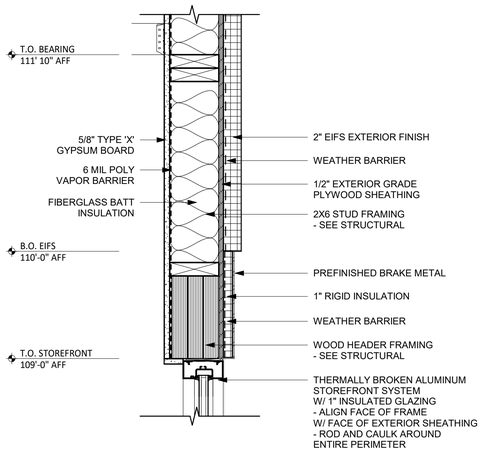

1 DETAIL @ STOREFRONT HEAD

SCALE: 1 1/2" = 1'-0"

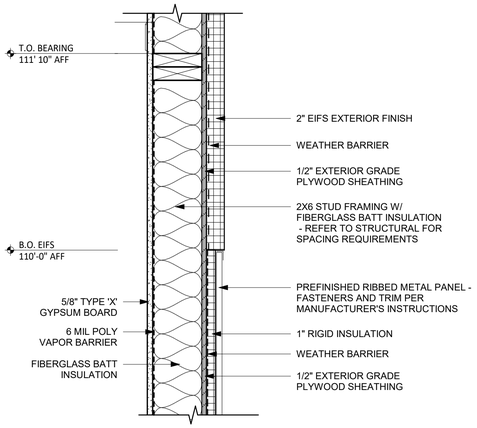

2 DETAIL @ METAL EYEBROW

SCALE: 1 1/2" = 1'-0"

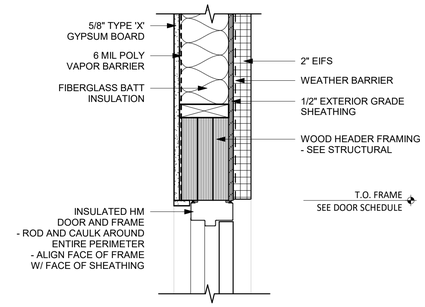

3 DETAIL @ HM FRAME HEAD

SCALE: 1 1/2" = 1'-0"

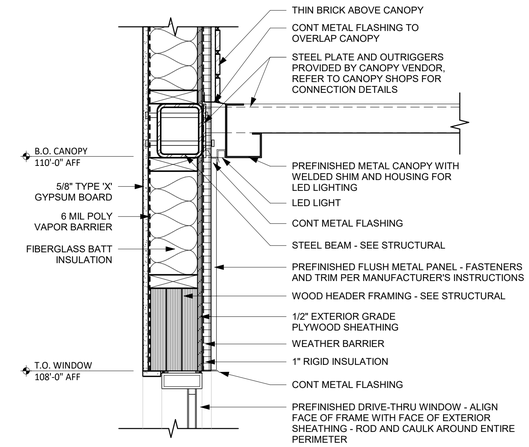

4 DETAIL @ PICK-UP WINDOW

SCALE: 1 1/2" = 1'-0"

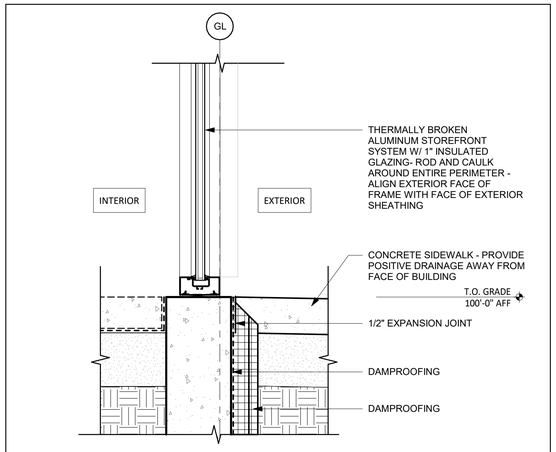

5 FOUNDATION DETAIL @ GLAZING

SCALE: 1 1/2" = 1'-0"

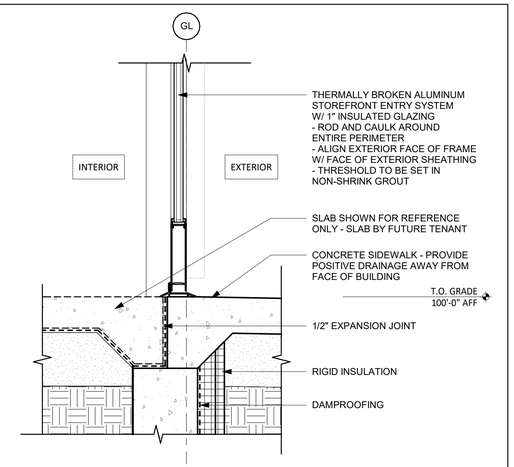

6 FOUNDATION DETAIL @ ENTRY

SCALE: 1 1/2" = 1'-0"

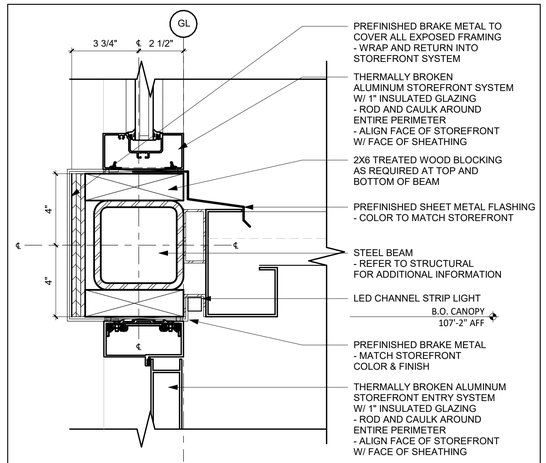

7 DETAIL @ ENTRY CANOPY

SCALE: 3" = 1'-0"

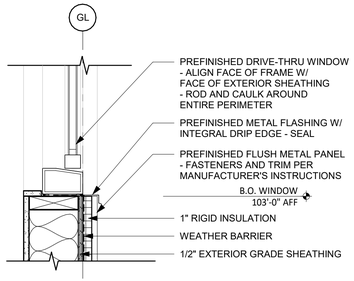

8 DETAIL @ WINDOW SILL

SCALE: 1 1/2" = 1'-0"

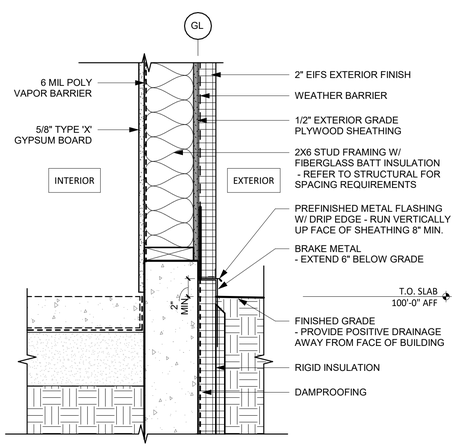

9 FOUNDATION DETAIL - EIFS

SCALE: 1 1/2" = 1'-0"

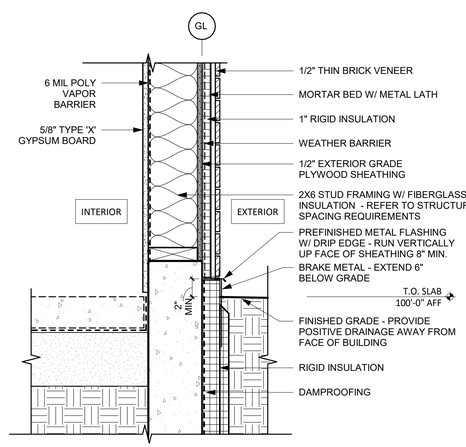

10 FOUNDATION DETAIL - THIN BRICK

SCALE: 1 1/2" = 1'-0"

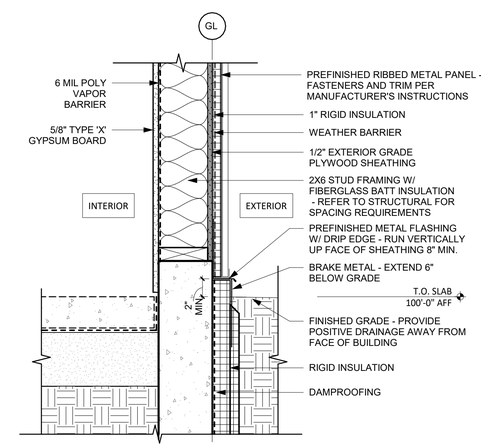

11 FOUNDATION DETAIL - METAL PANEL

SCALE: 1 1/2" = 1'-0"

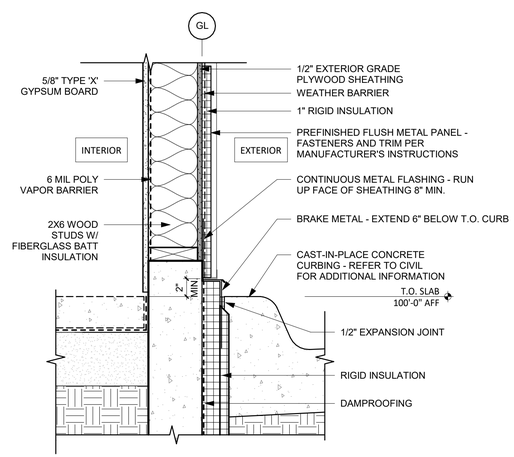

12 FOUNDATION DETAIL @ D/T TOWER

SCALE: 1 1/2" = 1'-0"

© COPYRIGHT WILKUS ARCHITECTS

CONSULTANT

WILKUS ARCHITECTS

CLIENT

Alliance DEVELOPMENT

FRED JACQUES
ALLIANCE DEVELOPMENT
230 OHIO ST, SUITE 200
OSHKOSH, WI 54902
(612) 313-0126

PROJECT INFORMATION

SOUTH LA CROSSE SHELL

MORMON COULEE RD & LOSEY BLVD S
LA CROSSE, WI 54601

SEAL

NOT FOR CONSTRUCTION

PROJECT NO.	2025-0394
DRAWN BY	BEH
CHECKED BY	SAS

ISSUE	DATE
PERMIT SET	01/09/2026

REVISION	DATE

TITLE:

DETAILS

SHEET NUMBER:

A406

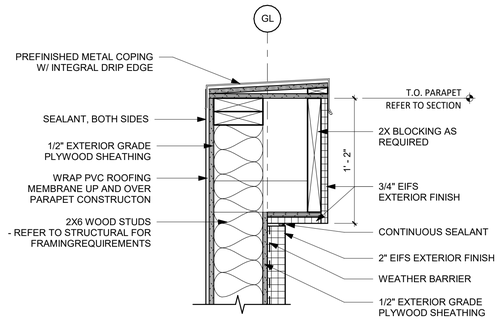

1 DETAIL @ EIFS PARAPET

SCALE: 1 1/2" = 1'-0"

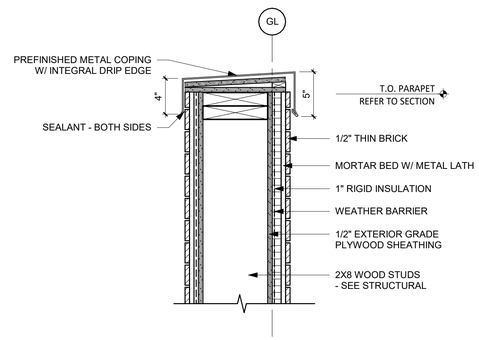

2 DETAIL @ THIN BRICK PARAPET

SCALE: 1 1/2" = 1'-0"

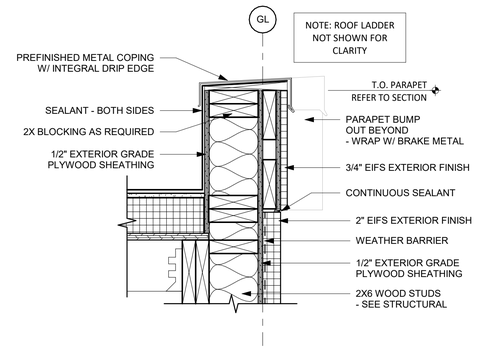

3 DETAIL @ ROOF LADDER PARAPET

SCALE: 1 1/2" = 1'-0"

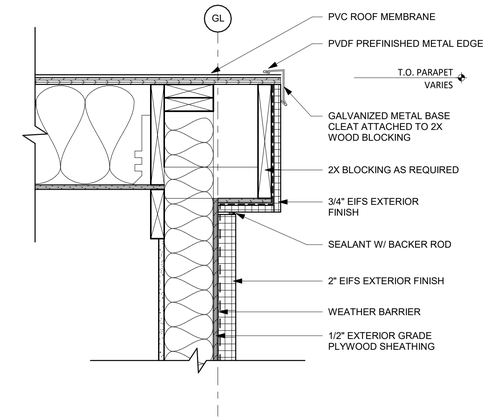

4 DETAIL @ OVERHANG EDGE

SCALE: 1 1/2" = 1'-0"

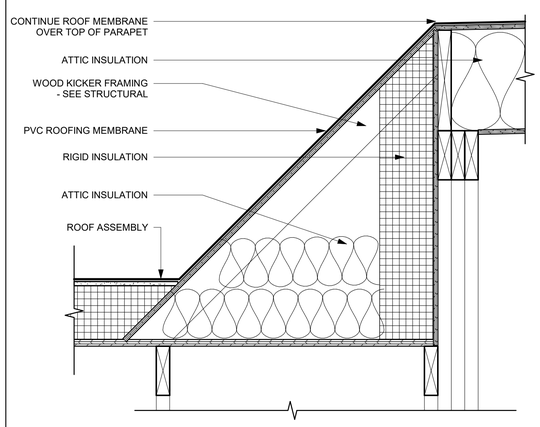

5 DETAIL @ ROOF TRANSITION

SCALE: 1 1/2" = 1'-0"

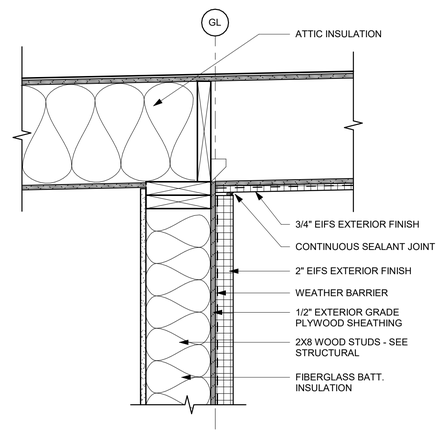

6 DETAIL @ ROOF OVERHANG SOFFIT

SCALE: 1 1/2" = 1'-0"

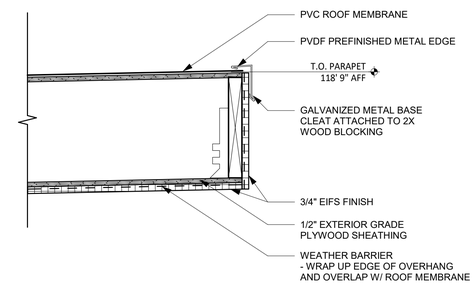

7 DETAIL @ OVERHANG EDGE

SCALE: 1 1/2" = 1'-0"

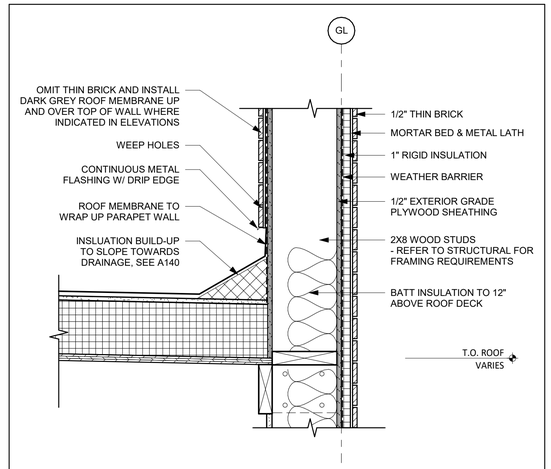

8 DETAIL @ WALL TO ROOF

SCALE: 1 1/2" = 1'-0"

© COPYRIGHT WILKUS ARCHITECTS

CONSULTANT

WILKUS ARCHITECTS

CLIENT

Alliance DEVELOPMENT

FRED JACQUES
ALLIANCE DEVELOPMENT
230 OHIO ST, SUITE 200
OSHKOSH, WI 54902
(612) 313-0126

PROJECT INFORMATION

SOUTH LA CROSSE SHELL

MORMON COULEE RD & LOSEY BLVD S
LA CROSSE, WI 54601

SEAL

NOT FOR CONSTRUCTION

PROJECT NO.	2025-0394
DRAWN BY	BEH
CHECKED BY	SAS

ISSUE	DATE
PERMIT SET	01/09/2026

REVISION	DATE

TITLE:

DETAILS

SHEET NUMBER:

A407

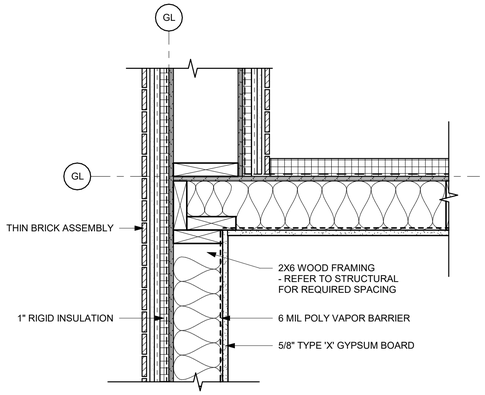

1 PLAN DETAIL @ WING WALL CORNER

SCALE: 1 1/2" = 1'-0"

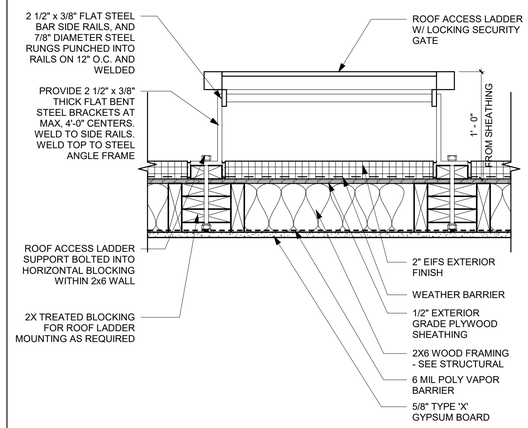

2 PLAN DETAIL @ ROOF ACCESS LADDER

SCALE: 1 1/2" = 1'-0"

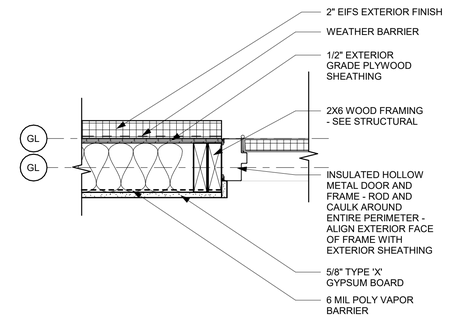

3 PLAN DETAIL @ HM DOOR

SCALE: 1 1/2" = 1'-0"

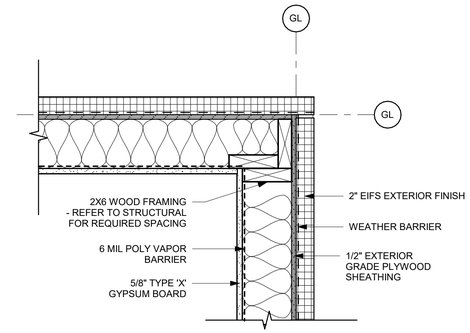

4 PLAN DETAIL @ OUTSIDE CORNER

SCALE: 1 1/2" = 1'-0"

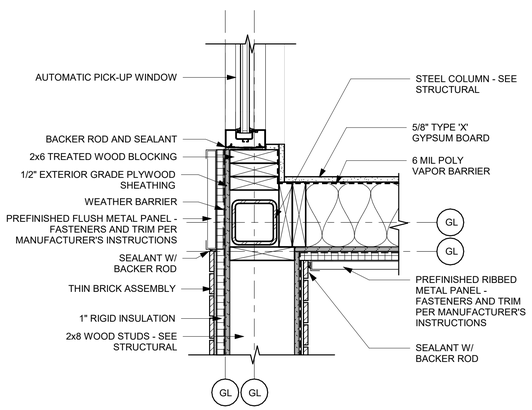

5 PLAN DETAIL @ DRIVE-THRU CORNER

SCALE: 1 1/2" = 1'-0"

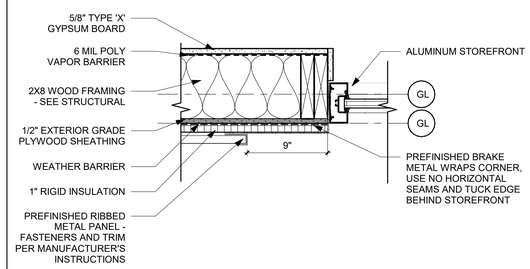

6 PLAN DETAIL @ STOREFRONT JAMB

SCALE: 1 1/2" = 1'-0"

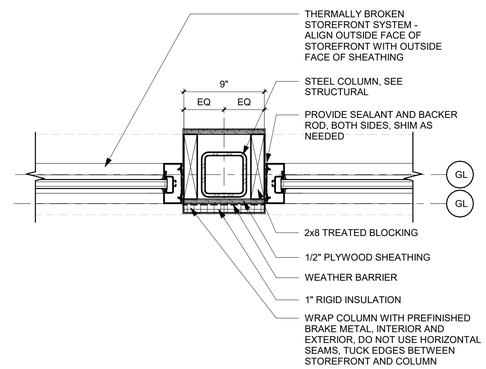

7 PLAN DETAIL @ STEEL COLUMN

SCALE: 1 1/2" = 1'-0"

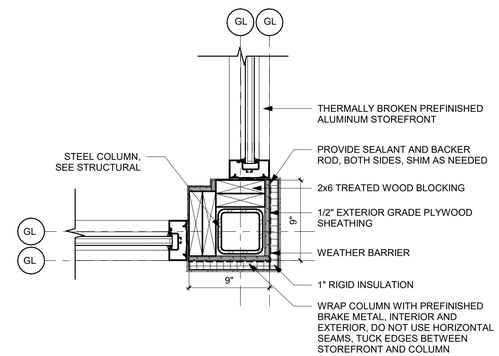

8 PLAN DETAIL @ STOREFRONT CORNER

SCALE: 1 1/2" = 1'-0"

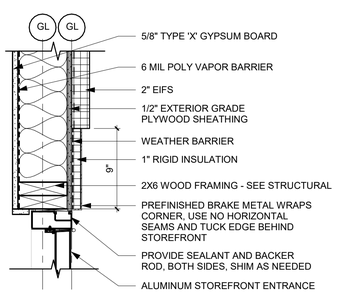

9 PLAN DETAIL @ STOREFRONT JAMB

SCALE: 1 1/2" = 1'-0"

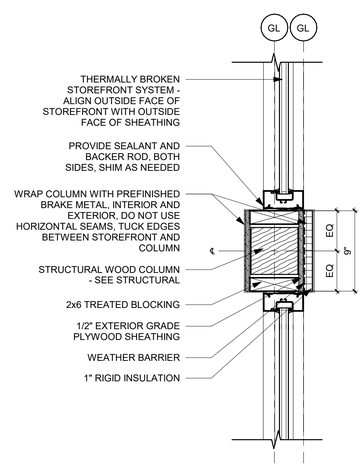

10 PLAN DETAIL @ WOOD COLUMN

SCALE: 1 1/2" = 1'-0"

© COPYRIGHT WILKUS ARCHITECTS

CONSULTANT

WILKUS ARCHITECTS

CLIENT

Alliance DEVELOPMENT

FRED JACQUES
ALLIANCE DEVELOPMENT
230 OHIO ST, SUITE 200
OSHKOSH, WI 54902
(612) 313-0126

PROJECT INFORMATION

SOUTH LA CROSSE SHELL

MORMON COULEE RD & LOSEY BLVD S
LA CROSSE, WI 54601

SEAL

NOT FOR CONSTRUCTION

PROJECT NO.	2025-0394
DRAWN BY	BEH
CHECKED BY	SAS

ISSUE	DATE
PERMIT SET	01/09/2026

REVISION	DATE

TITLE:

PLAN DETAILS

SHEET NUMBER

A408

Back to Top

StoTherm® ci
Soffit: Insulated and Unvented

Detail No.: 52s.30
Date: June 2022

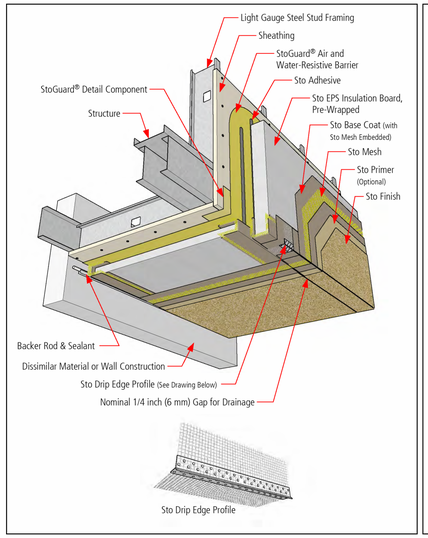

Notes:

1. Refer to StoGuard Product Use Chart (Table 1.1) for StoGuard detail components; joint treatment, rough opening protection, backing for masonry anchors, or transitions to dissimilar materials, joints and seams in construction.

2. Refer to General Notes for specific information and design guidance on wall assembly components.

3. Components not identified as Sto are furnished by other manufacturers and are not necessarily installed by trades who install the Sto products. Refer to project specific contract documents.

4 EIFS UNVENTED INSULATED SOFFIT (WITHOUT STARTER TRACK)

SCALE: 1 1/2" = 1'-0"

Back to Top

StoTherm® ci
System Components with Sto Textured Finish

Detail No.: 52s.00
Date: June 2022

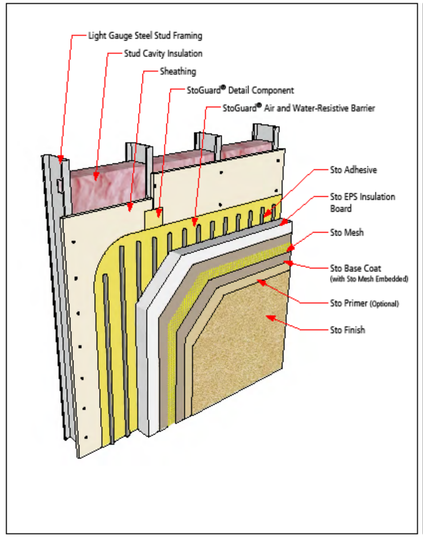

Notes:

1. Refer to StoGuard Product Use Chart (Table 1.1) for StoGuard detail components; joint treatment, rough opening protection, backing for masonry anchors, or transitions to dissimilar materials, joints and seams in construction.

2. Refer to General Notes for specific information and design guidance on wall assembly components.

3. Components not identified as Sto are furnished by other manufacturers and are not necessarily installed by trades who install the Sto products. Refer to project specific contract documents.

1 EIFS SYSTEM COMPONENTS

SCALE: 1 1/2" = 1'-0"

Back to Top

StoTherm® ci
Termination at Parapet - Front

Detail No.: 52s.60A
Date: June 2022

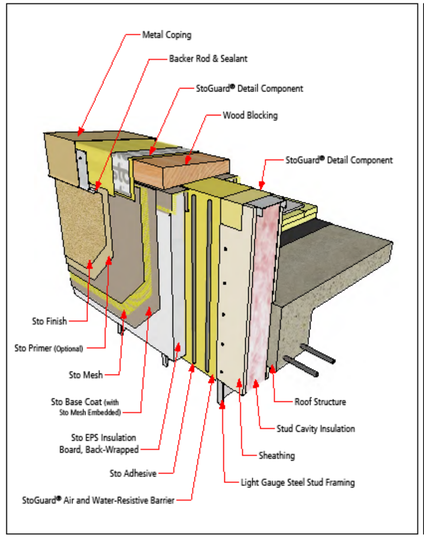

Notes:

1. Refer to StoGuard Product Use Chart (Table 1.1) for StoGuard detail components; joint treatment, rough opening protection, backing for masonry anchors, or transitions to dissimilar materials, joints and seams in construction.

2. Refer to General Notes for specific information and design guidance on wall assembly components.

3. Components not identified as Sto are furnished by other manufacturers and are not necessarily installed by trades who install the Sto products. Refer to project specific contract documents.

3 EIFS TERMINATION AT PARAPET

SCALE: 1 1/2" = 1'-0"

Back to Top

StoTherm® ci
Termination at Grade - Sheathing Flush with Foundation or Slab Edge

Detail No.: 52s.03A
Date: June 2022

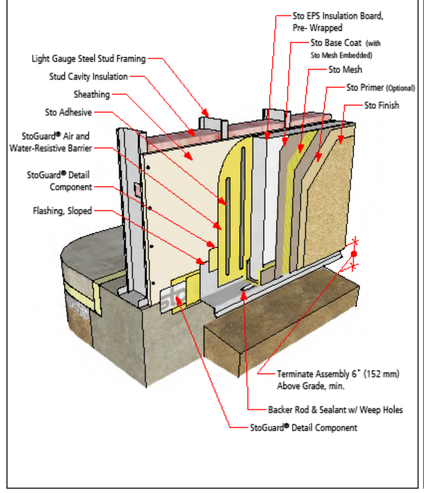

Notes:

1. Refer to StoGuard Product Use Chart (Table 1.1) for StoGuard detail components; joint treatment, rough opening protection, backing for masonry anchors, or transitions to dissimilar materials, joints and seams in construction.

2. Refer to General Notes for specific information and design guidance on wall assembly components.

3. Components not identified as Sto are furnished by other manufacturers and are not necessarily installed by trades who install the Sto products. Refer to project specific contract documents.

2 EIFS TERMINATION AT GRADE

SCALE: 1 1/2" = 1'-0"

ATTENTION

WWW.STOCORP.COM

Sto products are intended for use by qualified professional contractors, not consumers, as a component of a larger construction assembly as specified by a qualified design professional, general contractor or builder. They should be installed in accordance with those specifications and Sto's instructions. Sto Corp. disclaims all, and assumes no, liability for on-site inspections, for its products applied improperly, or by unqualified persons or entities, or as part of an improperly designed or constructed building, for the nonperformance of adjacent building components or assemblies, or for other construction activities beyond Sto's control. Improper use of Sto products or use as part of an improperly designed or constructed larger assembly or building may result in serious damage to Sto products, and to the structure of the building or its components. STO CORP. DISCLAIMS ALL WARRANTIES EXPRESSED OR IMPLIED EXCEPT FOR EXPLICIT LIMITED WRITTEN WARRANTIES ISSUED TO AND ACCEPTED BY BUILDING OWNERS IN ACCORDANCE WITH STO'S WARRANTY PROGRAMS WHICH ARE SUBJECT TO CHANGE FROM TIME TO TIME. For the fullest, most current information on proper application, clean-up, mixing and other specifications and warranties, cautions and disclaimers, please refer to the Sto Corp. website, www.stocorp.com.

Sto details are illustrations of construction for the EIFS (exterior insulation finish system). They are guidelines to assist in developing project specific details for the finish system. Components noted in the details outside of the EIFS will vary within projects. Refer to construction set for wall system and building details. Refer to the appropriate Sto specification for EIFS design requirements. And refer to local building code for any special requirements.

© COPYRIGHT WILKUS ARCHITECTS

CONSULTANT

WILKUS ARCHITECTS

CLIENT

Alliance DEVELOPMENT

FRED JACQUES
ALLIANCE DEVELOPMENT
230 OHIO ST, SUITE 200
OSHKOSH, WI 54902
(612) 313-0126

PROJECT INFORMATION

SOUTH LA CROSSE SHELL

MORMON COULEE RD & LOSEY BLVD S
LA CROSSE, WI 54601

SEAL

NOT FOR CONSTRUCTION

PROJECT NO.	2025-0394
DRAWN BY	BEH
CHECKED BY	SAS

ISSUE	DATE
PERMIT SET	01/09/2026

REVISION	DATE

TITLE:

EIFS DETAILS

SHEET NUMBER

A409

DOOR SCHEDULE

TAG	DOOR DESCRIPTION	DOOR WIDTH	HEIGHT	THICKNESS	DOOR TYPE	DOOR FINISH	FRAME FRAME TYPE	MATERIAL	STILE	HARDWARE SET	REMARKS
1	DOUBLE STOREFRONT (WIDE STILE, WOOD PULL/PUSH)	6' - 0"	7' - 0"	0' - 1 3/4"	A	SEE ELEVATIONS	STOREFRONT	ALUM	WIDE (5")	1	1,2,4,5
2	SINGLE STOREFRONT (WIDE STILE, NON-OFFSET, PANIC)	3' - 0"	7' - 0"	0' - 1 3/4"	A	SEE ELEVATIONS	STOREFRONT	ALUM	WIDE (5")	2A	1,3,4,5
3	HM REAR KITCHEN (STANDARD)	3' - 6"	7' - 0"	0' - 1 3/4"	D	PAINT "BLACK"	1	H.M.	-	3	1,4,6

DOOR REMARKS

1. DOORS WITH REMARK #1 TO BE KEYED THE SAME
2. EXIT INDICATOR ARRIVES WITH SIGNS STATING "THIS DOOR TO REMAIN UNLOCKED DURING BUSINESS HOURS" AND "THIS DOOR TO REMAIN UNLOCKED WHEN THE BUILDING IS OCCUPIED". VERIFY REQUIRED SIGN WORDING WITH LOCAL JURISDICTION PRIOR TO INSTALLATION. ONE SIGN IS TO BE PLACED IN A VISIBLE LOCATION ABOVE THE DOORS.
3. THERE IS TO BE NO EXTERIOR HOLE OR CYLINDER
4. USE NON-SHRINK STRUCTURAL GROUT BED UNDER THRESHOLD
5. BLACK DOOR SWEEP TO BE USED WITH CHARCOAL, BLACK OR BRONZE STOREFRONT. LIGHT GRAY DOOR SWEEP TO BE USED WITH CLEAR ANODIZED ALUMINUM STOREFRONT
6. REAR KITCHEN DOOR TO BE PAINTED 'BLACK' U.N.O.

HARDWARE SETS

SET 1 - MAIN ENTRY - PAIR - WOOD PULL/PUSH		
(2)	HINGE	HAGER, MODEL 780-224HD-83"-CLR
(2)	MORTISE CYLINDER	SCHLAGE, MODEL 80-103, BRUSHED CHROME; C.O. CYLINDER AT 34" MIN. FROM BOTTOM OF DOOR
(2)	TEMP CORE	SCHLAGE, MODEL 80-035 INTERCHANGEABLE CORE, (BRUSHED CHROME)
(2)	PUSH HARDWARE	1 1/2" DIAMETER WOOD PUSH, VARIES HIGH - PROVIDED AND INSTALLED BY TENANT
(2)	PULL HARDWARE	1 1/2" DIAMETER WOOD PULL, VARIES HIGH - PROVIDED AND INSTALLED BY TENANT
(1)	DEADBOLT	ADAMS RITE, MODEL MS1850S-310-628
(1)	EXIT INDICATOR	ADAMS RITE, MODEL 4089-00-130
(1)	HEADER BOLT	ADAMS RITE, MODEL 4016-30-01
(1)	THRESHOLD BOLT	ADAMS RITE, MODEL 4015-18-1B
(2)	CLOSER	DORMA, MODEL 8916-AF89P-689 (TOP JAMB), (ALUMINUM)
(2)	DOOR STOP	IVES, MODEL FS18S (ALUMINUM), MOUNT 4" MAX. FROM WALL
(2)	OVERHEAD STOP	GLYNN-JOHNSON, MODEL 454S-SP28 (ALUMINUM)
(2)	CLOSER BACK PLATE	DORMA, MODEL BP89, ALUMINUM
(1)	THRESHOLD	REESE, MODEL S239A-72 (SIZE 72")
(2)	SMOKE SEAL	REESE, MODEL 797B-21
(2)	DOOR SWEEP	PEMKO, MODEL SFSC-200-36 (36" DOOR),OWNER FURNISHED

SET 2A - ENTRY - SINGLE - NON-OFFSET - PANIC HARDWARE		
(1)	HINGE	HAGER, MODEL 780-224HD-83"-CLR
(1)	PUSH HARDWARE	ADAMS RITE, MODEL 8801-36-628 (ALUMINUM FINISH, 36" DOOR); C.O. EXIT DEVICE AT 38" FROM BOTTOM OF DOOR
(1)	PULL HARDWARE	HAGER, MODEL 4G US32D (8" CTC), CENTER ON DOOR STILE
(1)	CLOSER	DORMA, MODEL 8916-AF89P-689 (TOP JAMB), (ALUMINUM)
(1)	CLOSER BACK PLATE	DORMA, MODEL BP89, ALUMINUM
(1)	OVERHEAD STOP	GLYNN-JOHNSON, MODEL 454S-US32D (ALUMINUM)
(1)	THRESHOLD	REESE, MODEL S239A-36 (SIZE 36")
(1)	SMOKE SEAL	REESE, MODEL 797B-21
(1)	DOOR SWEEP	PEMKO, MODEL SFSC-200-36 (36" DOOR), OWNER FURNISHED
(1)	DOOR STOP	IVES, MODEL FS18S (ALUMINUM), MOUNT 4" MAX. FROM WALL

SET 3 - REAR EXIT - SINGLE		
(1)	HINGE	HAGER, MODEL 780-224HD-83"-CLR
(1)	PUSH HARDWARE	FALCON, MODEL 25-R-EO-4'-US28 (SIZE 42")
(1)	PULL HARDWARE	FALCON, MODEL 510L-DANE-LHR-US26D, ALUMINUM (EXTERIOR SIDE)
(1)	RIM CYLINDER	GLS, MODEL RCIC-7-LZ-626
(1)	TEMP CORE	SCHLAGE, MODEL 80-035 INTERCHANGEABLE CORE (FINISH: BRUSHED CHROME)
(1)	CLOSER	DORMA, MODEL 8916-AF89P-689 (TOP JAMB), ALUMINUM
(1)	CLOSER BACK PLATE	DORMA, MODEL BP89, ALUMINUM
(1)	THRESHOLD	REESE, MODEL S239A-42, (SIZE 42")
(1)	WEATHERSTRIP	REESE, MODEL DS75C-4070
(1)	DOOR SWEEP	PEMKO, MODEL SFSC-200-42 (42" DOOR) (BLACK) OWNER FURNISHED
(1)	DOOR VIEWER	IVES, MODEL U698B26D, C.O. VIEWER AT 60" FROM BOTTOM OF DOOR
(1)	DOOR SILENCERS	IVES, MODEL SR64
(1)	KICKPLATE	HIAWATHA, MODEL KP834-US32D

GENERAL DOOR NOTES

1. ALL EGRESS DOORS SHALL BE READILY OPENABLE FROM THE EGRESS SIDE WITHOUT THE USE OF A KEY OR SPECIAL KNOWLEDGE OR EFFORT.
2. LATCHES, HANDLES, PANIC BARS AND ALL DOOR HARDWARE WILL COMPLY WITH SECTION 7.2 OF NFPA 101 PER THE SPECIFICATIONS.
3. MAXIMUM EFFORT TO OPERATE DOORS WITH CLOSERS SHALL NOT EXCEED 5 POUNDS. THIS MAY BE INCREASED TO 15 POUNDS FOR FIRE-RATED DOORS.
4. THE BOTTOM 10 INCHES OF ALL DOORS SHALL HAVE A SMOOTH, UNINTERRUPTED SURFACE TO ALLOW THE DOOR TO BE OPENED BY A WHEELCHAIR FOOTREST WITHOUT CREATING A TRAP OR HAZARDOUS CONDITION.
5. ALL HARDWARE SHALL MATCH STOREFRONT, VERIFY WITH ARCHITECT PRIOR TO ORDERING
6. GC SHALL INSTALL OVERHEAD STOP PRIOR TO INSTALLING THE FLOOR MOUNTED STOP AT DOORS WHERE BOTH ARE PRESENT.

GENERAL WINDOW TYPE NOTES

A. ALL WINDOW AND DOOR GLAZING IS TO BE CLEAR / INSULATED UNLESS NOTED OTHERWISE.

B. WINDOW AND DOOR GLAZING TO BE TEMPERED AT LOCATIONS INDICATED WITH " * ".

C. NEW STOREFRONT FRAMING SYSTEM TO BE SUPPLIED BY GENERAL CONTRACTOR - GENERAL CONTRACTOR TO VERIFY FRAMING OPENING SIZES AND MATERIALS WITH ARCHITECT AND/OR CONSTRUCTION MANAGER PRIOR TO FABRICATION.

D. STOREFRONT GLAZING DESIGN IS BASED ON KAWNEER PREFINISHED BLACK ALUMINUM STOREFRONT WITH 1" INSULATED GLAZING, REFER TO SPECIFICATIONS.

E. STOREFRONT SYSTEM IS 2" x 4 1/2" NOMINAL DIMENSION; FRONT SET, U.N.O.

F. FULLY AUTOMATIC ELECTRIC PASS-THRU WINDOW BASED UPON READY-ACCESS WINDOW DESIGN, NOTIFY ARCHITECT IF NOT USING READY-ACCESS WINDOW.

PICK UP WINDOW

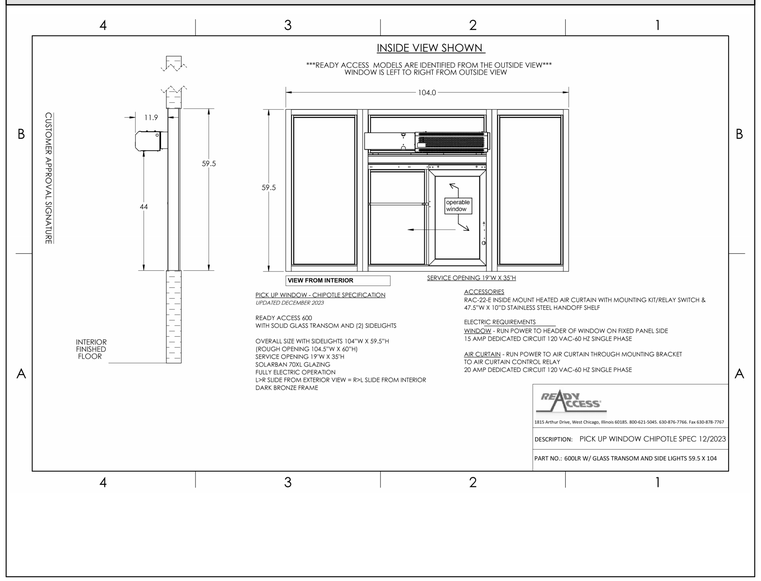

STOREFRONT FRAME TYPES

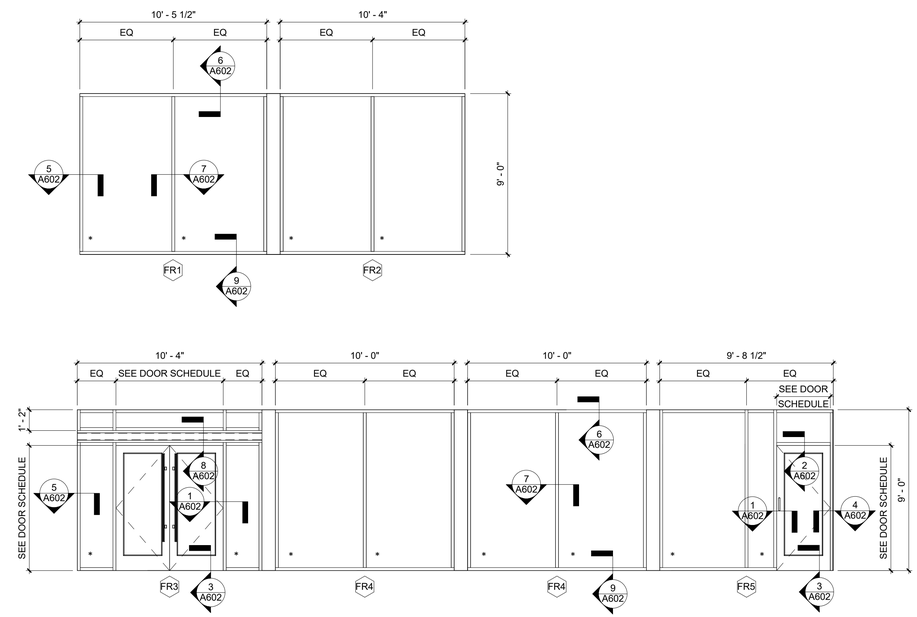

DOOR CLOSER

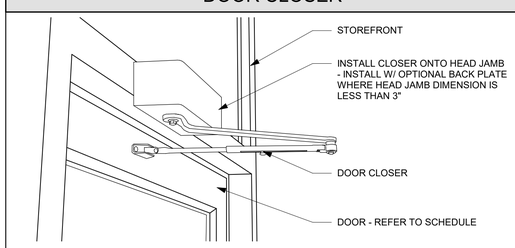

TOP JAMB MOUNT INSTALLATION. (NOTE THAT BACKPLATE IS MISSING IN THIS INSTALLATION BECAUSE HEAD JAMB IS OF ADEQUATE HEIGHT TO RECEIVE ALL MOUNTING SCREWS WITHOUT IT.) WHEN IN DOUBT ABOUT THE HEAD JAMB DIMENSION OR STABILITY, ORDER THE BACKPLATE.

SILL FLASHING DETAIL

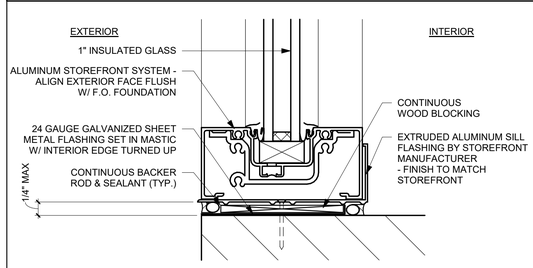

HOLLOW METAL FRAME TYPES

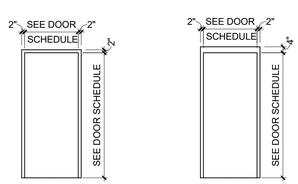

DOOR TYPES

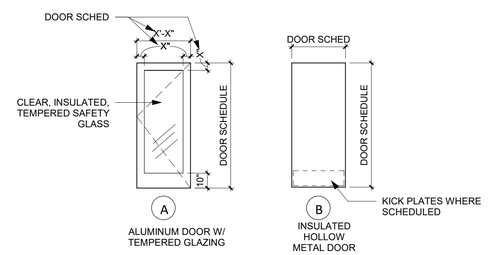

© COPYRIGHT WILKUS ARCHITECTS

CONSULTANT

WILKUS ARCHITECTS

CLIENT

Alliance DEVELOPMENT

FRED JACQUES
ALLIANCE DEVELOPMENT
230 OHIO ST, SUITE 200
OSHKOSH, WI 54902
(612) 313-0126

PROJECT INFORMATION

SOUTH LA CROSSE SHELL
MORMON COULEE RD & LOSEY BLVD S
LA CROSSE, WI 54601

SEAL

NOT FOR CONSTRUCTION

PROJECT NO.	2025-0394
DRAWN BY	BEH
CHECKED BY	SAS

ISSUE	DATE
PERMIT SET	01/09/2026

REVISION	DATE

TITLE:
DOOR & WINDOW SCHEDULE

SHEET NUMBER:
A601

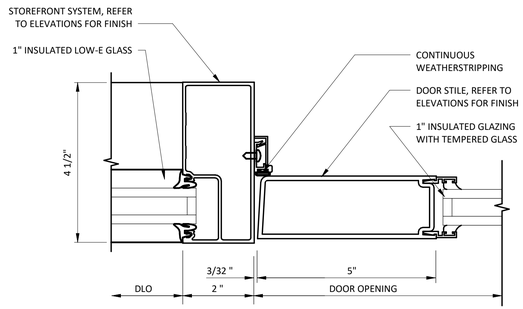

1 STOREFRONT DOOR JAMB

SCALE: 6" = 1'-0"

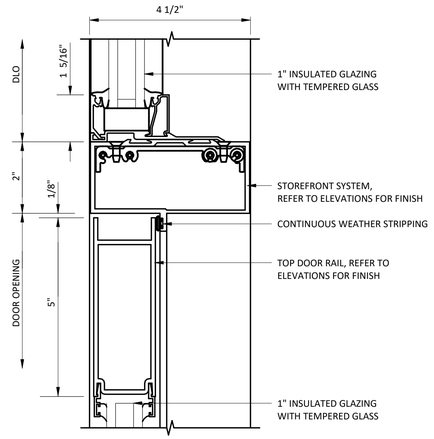

2 STOREFRONT TRANSOM BAR

SCALE: 6" = 1'-0"

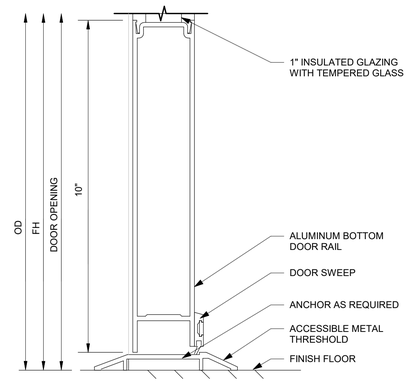

3 STOREFRONT THRESHOLD

SCALE: 6" = 1'-0"

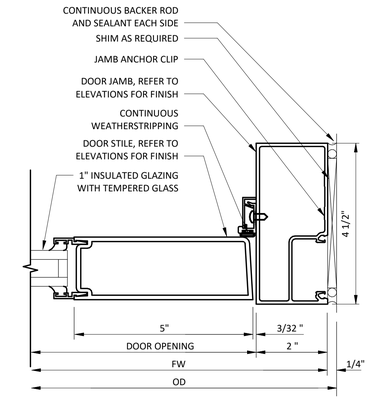

4 STOREFRONT DOOR JAMB

SCALE: 6" = 1'-0"

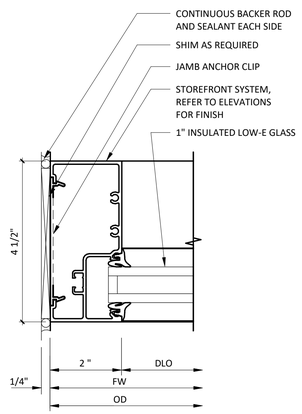

5 STOREFRONT JAMB

SCALE: 6" = 1'-0"

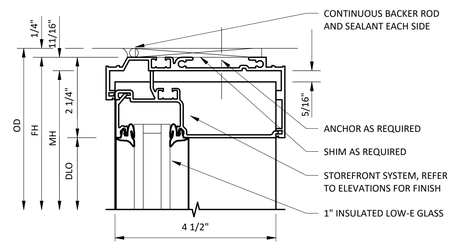

6 STOREFRONT HEAD

SCALE: 6" = 1'-0"

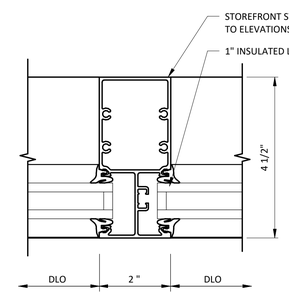

7 STOREFRONT MULLION

SCALE: 6" = 1'-0"

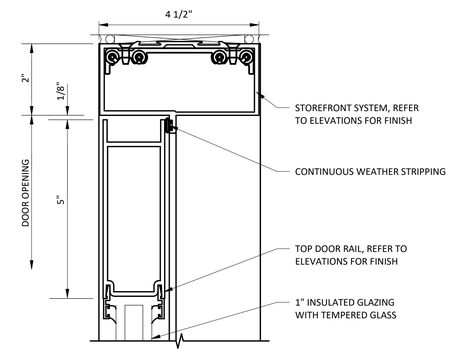

8 STOREFRONT TRANSOM BAR

SCALE: 6" = 1'-0"

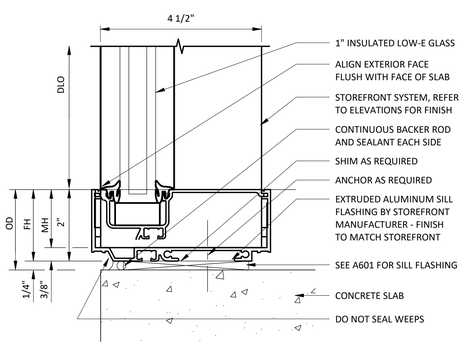

9 STOREFRONT SILL

SCALE: 6" = 1'-0"

© COPYRIGHT WILKUS ARCHITECTS

CONSULTANT

WILKUS ARCHITECTS

CLIENT

Alliance DEVELOPMENT

FRED JACQUES
ALLIANCE DEVELOPMENT
230 OHIO ST, SUITE 200
OSHKOSH, WI 54902
(612) 313-0126

PROJECT INFORMATION

SOUTH LA CROSSE SHELL

MORMON COULEE RD & LOSEY BLVD S
LA CROSSE, WI 54601

SEAL

NOT FOR CONSTRUCTION

PROJECT NO.	2025-0394
DRAWN BY	BEH
CHECKED BY	SAS

ISSUE	DATE
PERMIT SET	01/09/2026

REVISION	DATE

TITLE:

STOREFRONT DETAILS

SHEET NUMBER:

A602

GENERAL STRUCTURAL NOTES

1 BUILDING CODE:
1.1 THE WISCONSIN COMMERCIAL BUILDING CODE.
1.2 BASED ON THE 2021 INTERNATIONAL BUILDING CODE.

2 DESIGN LOADS:
2.1 ROOFS:
- DEAD .... 20 PSF
- LIVE .... 20 PSF*
- SNOW:
  - GROUND SNOW LOAD, P_g .... 40 PSF
  - FLAT ROOF SNOW LOAD, P_f .... 28 PSF**
  - EXPOSURE FACTOR, C_e 1.0
  - THERMAL FACTOR, C_t 1.0
  - IMPORTANCE FACTOR, I_s 1.0

2.2 WIND:
- BASIC DESIGN WIND SPEED, V .... 108 MPH
- RISK CATEGORY II
- EXPOSURE C
- INTERNAL PRESSURE COEFFICIENT, GC_{pi} .... ±0.18
- COMPONENT DESIGN PRESSURE .... SEE TABLE

2.3 SEISMIC DATA:
- SITE CLASS .... D (DEFAULT)
- RISK CATEGORY II
- IMPORTANCE FACTOR, I_e 1.0
- MAPPED SPECTRAL RESPONSE COEFFICIENT, S_S 0.052
- MAPPED SPECTRAL RESPONSE COEFFICIENT, S_1 .... 0.039
- DESIGN SPECTRAL RESPONSE COEFFICIENT, S_{DS} 0.055
- DESIGN SPECTRAL RESPONSE COEFFICIENT, S_{D1} 0.063
- SEISMIC DESIGN CATEGORY .... A
- BASIC SEISMIC FORCE RESISTANCE SYSTEM .... BEARING WALL WITH LIGHT FRAME WALLS
- SEISMIC MODIFICATION COEFFICIENT 6.5
- SEISMIC RESPONSE COEFFICIENT .... C_S=0.010
- ANALYSIS PROCEDURE .... EQUIVALENT LATERAL FORCE

2.4 ENGINEERED WOOD TRUSSES: .... REFER TO DETAIL 2/S201

* ROOF LIVE LOADS ARE REDUCED IN ACCORDANCE WITH SECTION 1607.14.2 OF THE IBC.
** PLUS SNOW ACCUMULATION IN ACCORDANCE WITH SECTION 1608 OF THE IBC.

COMPONENT AND CLADDING ULTIMATE WIND PRESSURE TABLE IN PSF[1,2]

LOCATION	EXTERIOR WALLS		GROSS ROOF UPLIFT	
	TRIBUTARY AREA		TRIBUTARY AREA	
	10 SQ. FT.	100 SQ. FT.	10 SQ. FT.	100 SQ. FT.
TYPICAL (ZONE 4, ZONE 1)	±25.2	±21.8	-40.5	-31.6
WITHIN 5 FEET OF BUILDING PERIM. OR RIDGE (ZONE 2)			-53.4	-42.0
FROM 5 FEET FROM BUILDING CORNER (ZONE 5, ZONE 3)	±31.0	±24.2	-72.8	-50.0

[1] LINEAR INTERPOLATION MAY BE USED FOR TRIBUTARY AREAS BETWEEN THOSE SHOWN
[2] PLUS AND MINUS SIGNS SIGNIFY PRESSURES ACTING TOWARD AND AWAY FROM THE PROJECTED SURFACES, RESPECTIVELY

3 GENERAL NOTES:
3.1 CONTRACTOR SHALL BE SOLELY RESPONSIBLE FOR THE MEANS AND METHODS OF CONSTRUCTION AND FOR THE SAFETY OF PERSONS AND PROPERTY. CONTRACTOR SHALL BE RESPONSIBLE FOR COMPLYING WITH ALL SAFETY PRECAUTIONS AND REGULATIONS DURING THE WORK. THE ENGINEER WILL NOT ADVISE ON NOR ISSUE DIRECTION AS TO SAFETY PRECAUTIONS AND PROGRAMS.
3.2 THE STRUCTURAL DRAWINGS HEREIN REPRESENT THE FINISHED STRUCTURE. DURING ERECTION OF THE STRUCTURE, THE CONTRACTOR SHALL BE SOLELY RESPONSIBLE FOR TEMPORARY GUYING, SHORING, BRACING, FORMING, ETC. TO HOLD THE STRUCTURE IN PROPER ALIGNMENT AND TO WITHSTAND ALL LOADS TO WHICH THE STRUCTURE MAY BE SUBJECTED, INCLUDING LATERAL LOADS, TEMPERATURE DIFFERENTIALS, STOCKPILES OF MATERIAL AND EQUIPMENT. SUCH MEASURES SHALL BE LEFT IN PLACE AS LONG AS REQUIRED FOR SAFETY AND UNTIL ALL FRAMING AND CONNECTIONS INCLUDING ROOF DECK ARE IN PLACE. THE INVESTIGATION, DESIGN, SAFETY, ADEQUACY AND INSPECTION OF SUCH TEMPORARY MEASURES ARE THE SOLE RESPONSIBILITY OF THE CONTRACTOR.
3.3 DRAWINGS INDICATE GENERAL AND TYPICAL DETAILS OF CONSTRUCTION. WHERE CONDITIONS ARE NOT SPECIFICALLY SHOWN, SIMILAR DETAILS OF CONSTRUCTION SHALL BE USED, SUBJECT TO REVIEW BY THE ENGINEER.
3.4 ARCHITECTURAL DRAWINGS, MECHANICAL DRAWINGS, ELECTRICAL DRAWINGS, TELECOMMUNICATION DRAWINGS, FIRE PROTECTION DRAWINGS, EQUIPMENT DRAWINGS AND RELATED ITEMS ARE BY OTHERS.
3.5 CONTRACTOR AND SUBCONTRACTORS SHALL THOROUGHLY REVIEW ALL DRAWINGS AND SPECIFICATIONS PRIOR TO SUBMITTING BIDS. MISCELLANEOUS FASTENERS, CLIPS, ETC. THAT ARE NOT DETAILED ON THE DRAWINGS BUT ARE PART OF THE REQUIREMENTS FOR FULL INSTALLATION OF ALL STRUCTURAL SYSTEMS ARE TO BE PART OF THE BID. THE CONTRACTOR SHALL VISIT THE SITE PRIOR TO THE BID TO ASCERTAIN CONDITIONS WHICH MAY ADVERSELY AFFECT THE BID.
3.6 DURING THE BIDDING STAGE, CONTRACTOR SHALL REQUEST AN INTERPRETATION OF CONFLICTS PRIOR TO BIDDING. IF NO REQUEST IS MADE, BOTH PROVISIONS SHALL BE PRESUMED TO BE INCLUDED IN THE BID AND THE ARCHITECT/ENGINEER SHALL DETERMINE WHICH PROVISION GOVERNS, AND THE CONTRACTOR SHALL PERFORM THE WORK AT NO ADDITIONAL COST TO THE OWNER.
3.7 ALL OMISSIONS AND CONFLICTS BETWEEN THE VARIOUS ELEMENTS OF THE CONSTRUCTION DRAWINGS AND/OR SPECIFICATIONS AND/OR EXISTING CONDITIONS SHALL BE BROUGHT TO THE ATTENTION OF THE ENGINEER BEFORE PROCEEDING WITH THE WORK.
3.8 THE CONTRACTOR SHALL COORDINATE ALL DEPRESSIONS, DIMENSIONS, ELEVATIONS, SLEEVES, CHASES, HANGERS, OPENINGS, BLOCK OUTS, INSERTS, ANCHORS, EQUIPMENT SUPPORTS, AND DETAILS WITH THE ENTIRE CONSTRUCTION PACKAGE INCLUDING ARCHITECTURAL DRAWINGS, MECHANICAL DRAWINGS, ELECTRICAL DRAWINGS, TELECOMMUNICATION DRAWINGS, FIRE PROTECTION DRAWINGS AND EQUIPMENT DRAWINGS. FOR CONCRETE AND MASONRY CONSTRUCTION THE INSERTS, EMBEDDED PLATES, ETC. SHALL NOT INTERFERE WITH REINFORCEMENT LOCATIONS.
3.9 MECHANICAL UNITS SUPPORTED BY ROOF STRUCTURE ARE SUBJECT TO THE ACCEPTANCE OF THE STRUCTURAL ENGINEER.

4 FOOTINGS AND SOIL DATA:
4.1 THE STRUCTURE IS DESIGNED FOR THE FOLLOWING:
- ASSUMED MAXIMUM ALLOWABLE SOIL BEARING CAPACITY .... 1500 PSF
- MAX TOTAL SETTLEMENT .... 1.0"
- MAX DIFFERENTIAL SETTLEMENT OVER 30 FT .... 0.5"

4.2 A QUALIFIED GEOTECHNICAL ENGINEER SHALL OBSERVE THE IN-SITU SOIL AFTER EXCAVATION AND PRIOR TO FOUNDATION CONSTRUCTION TO CONFIRM THESE MINIMUM VALUES. THE GEOTECHNICAL ENGINEER SHALL ADVISE THE CONTRACTOR OF ANY CORRECTION REQUIRED TO ACHIEVE THIS MINIMUM VALUE. NOTIFY OWNER AND ENGINEER IF SPECIFIED ALLOWABLE BEARING PRESSURE AND/OR MAXIMUM SETTLEMENT IS NOT FEASIBLE.
4.3 ALL TOPSOIL, FILL AND OTHER UNSUITABLE BEARING MATERIAL SHALL BE REMOVED. A GEOTECHNICAL ENGINEER SHALL INSPECT THE EXCAVATED AREA TO ENSURE ALL MATERIALS REQUIRING REMOVAL HAVE BEEN REMOVED AND TO VERIFY THE SOIL BEARING CAPACITY USED FOR DESIGN PRIOR TO CONCRETE PLACEMENT.
4.4 EMBEDMENT DEPTH FROM EXTERIOR GRADE TO BOTTOM OF FOOTING SHALL NOT BE LESS THAN 4'-0". BOTTOM OF FOOTING ELEVATION SHALL BE LOWERED AS REQUIRED TO MEET THIS MINIMUM.
4.5 PRIOR TO COMMENCING ANY FOUNDATION WORK, COORDINATE WITH ALL EXISTING UTILITIES. FOUNDATIONS SHALL BE LOWERED WHERE REQUIRED TO AVOID UTILITIES.
4.6 MUD SLABS, FOOTINGS OR SLABS SHALL NOT BE PLACED ONTO OR AGAINST SUBGRADE CONTAINING FREE WATER, FROST OR ICE. CONTRACTOR SHALL TAKE ALL NECESSARY PRECAUTIONS TO PREVENT ANY FROST OR ICE FROM PENETRATING ANY FOOTING OR SLAB SUBGRADE BEFORE AND AFTER PLACING CONCRETE UNTIL SUCH SUBGRADES ARE FULLY PROTECTED BY THE PERMANENT BUILDING STRUCTURE OR PROPER DEPTH OF BURY.

5 REINFORCED CONCRETE:
5.1 DESIGN CODE: BUILDING CODE REQUIREMENTS FOR STRUCTURAL CONCRETE (ACI 318), LATEST ADOPTION.
5.2 CONCRETE MIXES SHALL BE DESIGNED PER ACI 301 USING THE FOLLOWING:
- PORTLAND CEMENT CONFORMING TO ASTM C150 OR C595
- AGGREGATE CONFORMING TO ASTM C33
- ADMIXTURES CONFORMING TO ASTM C494, C1017, AND C260. DO NOT USE CALCIUM CHLORIDE OR ADMIXTURES CONTAINING CALCIUM CHLORIDE.
- CONCRETE SHALL BE READY-MIXED IN ACCORDANCE WITH ASTM C94.

5.3 MATERIAL STRENGTHS:
5.3.1 PROVIDE THE FOLLOWING CONCRETE PROPERTIES:

DESCRIPTION	COMPRESSIVE STRENGTH (f'c) AT 28 DAYS	MAX AGGREGATE SIZE	SLUMP[2]	MAX WATER TO CEMENT RATIOS (W/C)[3]
FOOTINGS	3000 PSI	1 ½"	4" ± 1"	0.57
FOUNDATION WALLS	4000 PSI	¾"	4" ± 1"	0.45
ALL OTHER CONCRETE	4000 PSI	¾"	4" ± 1"	0.43

[1] TOLERANCE ON AIR CONTENT AS DELIVERED SHALL BE ± 1.5%.
[2] PRIOR TO ADDITION OF PLASTICIZER OR HIGH-RANGE WATER-REDUCER
[3] THESE W/C RATIOS MAY BE LOWER THAN NECESSARY TO PROVIDE THE SPECIFIED STRENGTHS.

5.3.2 REINFORCING STEEL:
- ALL OTHER BARS, STIRRUPS AND TIES .... ASTM A615, GR. 60
- WELDED WIRE FABRIC .... ASTM A1064

5.4 PLACEMENT OF CONCRETE AND REINFORCEMENT SHALL BE IN ACCORDANCE WITH ACI AND CRSI STANDARDS.
5.5 CLEAN REINFORCEMENT OF LOOSE RUST, MILL SCALE, EARTH, ICE, AND OTHER FOREIGN MATERIALS THAT REDUCE BOND TO CONCRETE.
5.6 PROVIDE 3/4" CHAMFER AT ALL EXPOSED CORNERS.
5.7 PROVIDE THE FOLLOWING CONCRETE COVER ON REINFORCING BARS UNLESS NOTED OTHERWISE ON DRAWINGS:
- PIERS .... 1 1/2" COVER ON TIES
- FOOTINGS .... 3" COVER ON BOTTOM AND SIDES
- WALLS .... CENTER REINFORCING IN ALL

5.8 ALL WELDED WIRE FABRIC SHALL BE TRANSPORTED AND DELIVERED IN FLAT SHEETS.
5.9 WELDING (INCLUDING TACKING) OF BARS OTHER THAN ASTM A706 SHALL NOT BE ALLOWED. WELDING OF ASTM A706 BARS SHALL CONFORM TO AWS D1.4.
5.10 EPOXY COATED REINFORCING SHALL CONFORM TO ASTM A775.
5.11 MAINTAIN CONCRETE IN A CONTINUOUSLY DAMP AND WET CONDITION FOR NOT LESS THAN 7 DAYS AFTER PLACING. PROTECT FROM MOISTURE LOSS WITH SHEETING OR SPRAY-ON MEMBRANE MEETING ASTM C309 AND COMPATIBLE WITH FLOOR COVERINGS.
5.12 FINISHING REQUIREMENTS ARE AS FOLLOWS (REFER TO ACI 301):
- SMOOTH RUBBED FINISH ON EXPOSED FORM SURFACES.
- WOOD FLOAT FINISH ON SLABS TO RECEIVE TOPPING.
- STEEL TROWEL FINISH ON INTERIOR SLABS AND SLABS TO RECEIVE FINISH FLOORING.
- BROOM FINISH ON WALKS, STAIRS AND EXTERIOR CONCRETE PEDESTRIAN PAVING.
- NONSLIP FINISH SHALL BE APPLIED WITH ALUMINUM OXIDE TYPE SURFACE TREATMENT.

5.13 DO NOT FIELD BEND BARS PARTIALLY EMBEDDED IN HARDENED CONCRETE UNLESS SPECIFICALLY INDICATED OR ACCEPTED BY THE ENGINEER.
5.14 PROVIDE CORNER BARS EQUAL IN SIZE AND SPACING TO WALL HORIZONTAL REINFORCEMENT UNLESS NOTED OTHERWISE.
5.15 AT WALL OPENINGS, PROVIDE (2) #4 BARS ON ALL SIDES EXTENDING 2'-0" BEYOND THE OPENING AND (2) #4x4'-0" DIAGONAL BARS AT 45 DEGREES AT ALL CORNERS UNLESS NOTED OTHERWISE.
5.16 COLD WEATHER CONCRETING SHALL FOLLOW PROCEDURES IN ACI 306.
5.17 HOT WEATHER CONCRETING SHALL FOLLOW PROCEDURES IN ACI 305.
5.18 FOR LAP LENGTHS (REFER TO SCHEDULE ON PLANS) PROVIDE CLASS B LAP SPLICES IN ACCORDANCE WITH ACI 318.
5.19 BAR SUPPORTS AND HOLDING BARS SHALL BE PROVIDED FOR ALL REINFORCING STEEL TO ENSURE COMPLIANCE WITH MINIMUM CONCRETE COVER. BAR SUPPORTS SHALL BE PLASTIC, PLASTIC TIPPED, EPOXY COATED OR STAINLESS STEEL FOR UNCOATED STEEL. BAR SUPPORTS FOR COATED STEEL SHALL BE PLASTIC, PLASTIC COATED OR EPOXY COATED.
5.20 FORMWORK SHALL REMAIN IN PLACE UNTIL CONCRETE HAS ATTAINED A MINIMUM COMPRESSIVE STRENGTH OF 3,000 PSI, UNLESS OTHERWISE DIRECTED BY THE ENGINEER. THE CONTRACTOR SHALL PROVIDE ALL SHORING.
5.21 VERTICAL WALL CONSTRUCTION JOINTS SHALL BE FORMED WITH VERTICAL BULKHEADS AND KEYWAYS. WALL REINFORCING SHALL BE CONTINUOUS THROUGH THE JOINT OR SHALL BE DOWELED WITH AN EQUIVALENT AREA OF REINFORCEMENT UNLESS NOTED OTHERWISE.
5.22 SPECIAL ADDITIONAL REQUIREMENTS FOR SLABS ON GRADE:
5.22.1 DESIGN STANDARD: GUIDE FOR CONCRETE FLOOR AND SLAB CONSTRUCTION (ACI 302.1)
5.22.2 REFER TO GEOTECHNICAL REPORT FOR VAPOR BARRIER, ENGINEERED FILL AND SUBGRADE COMPACTION REQUIREMENTS.
5.22.3 LAP ADJOINING WELDED WIRE FABRIC AT LEAST TWO FULL MESHES.
5.22.4 WALKWAYS AND OTHER EXTERIOR SLABS, IF SHOWN ON THE STRUCTURAL DRAWINGS, ARE FOR INFORMATION ONLY. WALKWAYS SHALL BE REINFORCED WITH A MINIMUM OF 6x6 – W1.4xW1.4 WELDED WIRE FABRIC UNLESS NOTED OTHERWISE. SEE THE SITE PLAN, CIVIL DRAWINGS AND ARCHITECTURAL DRAWINGS FOR LOCATIONS, DIMENSIONS, ELEVATIONS, JOINTING DETAILS AND FINISH DETAILS.
5.22.5 FINISH TOLERANCE OF ALL SLABS SHALL BE IN ACCORDANCE WITH ACI 302.1 R.

6 MASONRY:
6.1 DESIGN CODE: BUILDING CODE REQUIREMENTS FOR CONCRETE MASONRY STRUCTURES (TMS 402/602) AND SPECIFICATIONS FOR MASONRY STRUCTURES (TMS 402/602), LATEST ADOPTION.
6.2 MATERIAL STRENGTHS:
- CONCRETE UNIT MASONRY .... ASTM C90, f'm=2000 PSI; NORMAL WEIGHT DENSITY CLASSIFICATION
- MORTAR .... ASTM C270
  - LOAD BEARING AND/OR BELOW GRADE .... TYPE M OR S
  - ALL OTHER .... TYPE N
- COREFILL CONCRETE GROUT .... ASTM C476, f'c=2000 PSI; 8-10" SLUMP; 3/8" MAX. AGGREGATE
- REINFORCING STEEL .... ASTM A615, GRADE 60

6.3 GROUT SOLID ALL BELOW GRADE MASONRY, CORES WITH VERTICAL REINFORCING, BOND BEAMS AND LINTELS.
6.4 VERTICAL CELLS TO BE FILLED WITH GROUT SHALL BE ALIGNED TO PROVIDE A CONTINUOUS, UNOBSTRUCTED OPENING. CELLS WHICH CONTAIN VERTICAL REINFORCEMENT SHALL HAVE A MINIMUM 2" CLEAR OPENING. ALL REINFORCING BARS SHALL BE PLACED TO PROVIDE MASONRY COVERAGE OF NOT LESS THAN 2 1/2". THE MINIMUM DISTANCE BETWEEN PARALLEL REINFORCING BARS, EXCEPT IN COLUMNS, SHALL BE EQUAL TO THE NOMINAL DIAMETER OF THE BAR OR 1", WHICHEVER IS GREATER.
6.5 USE WIRE POSITIONERS FOR SECURING REINFORCEMENT IN POSITION.
6.6 THE USE OF MASONRY CEMENT IS STRICTLY PROHIBITED. ALL MORTAR SHALL MEET THE "PROPORTION SPECIFICATION" OF ASTM C270 AND SHALL BE MADE WITH PORTLAND CEMENT/LIME (NON AIR-ENTRAINED).
6.7 UNLESS OTHERWISE INDICATED, ALL WALLS SHALL BE LAID UP IN RUNNING BOND. "TOOTH" BOND CORNERS AND INTERSECTIONS OF LOAD-BEARING WALLS.
6.8 PROVIDE VERTICAL REINFORCING BARS OF THE GIVEN SIZE AND SPACING AS INDICATED. PROVIDE BARS AT ALL WALL CORNERS, INTERSECTIONS, OPENING EDGES AND EACH SIDE OF CONTROL JOINTS.
6.9 HOLLOW UNITS SHALL BE LAID WITH FULL MORTAR COVERAGE ON HORIZONTAL AND VERTICAL FACE SHELLS. WEBS SHALL ALSO BE BEDDED, WHERE THEY ARE ADJACENT TO CELLS TO BE REINFORCED OR FILLED WITH GROUT, IN THE STARTING COURSE ON FOOTINGS AND SOLID FOUNDATION WALLS AND IN NON-REINFORCED OR GROUTED PIERS, PILASTERS OR COLUMNS.
6.10 PROVIDE 9 GA. GALV. "DUR-O-WALL" LADDER-TYPE HORIZONTAL JOINT REINFORCEMENT (OR ACCEPTED ALTERNATE) EVERY SECOND COURSE (16" OC) MAXIMUM.

7 POST-INSTALLED FASTENING:
7.1 POST-INSTALLED SYSTEMS ARE BASED ON THE FOLLOWING (UNLESS NOTED OTHERWISE):

DESCRIPTION	ANCHOR/ADHESIVE[1]	APPLICATIONS	ICC-ESR NO.
SCREW ANCHOR	HILTI HUS-EZ OR SIMPSON TITEN HD	CONCRETE	3027(HILTI) / 2713(SIMPSON)
ADHESIVES	HILTI HIT-HY 200 V3	CONCRETE	4868

[1] SUBSTITUTIONS WILL BE CONSIDERED PROVIDED THE CONTRACTOR SUPPLIES DOCUMENTATION OF EQUAL OR GREATER CAPACITY BASED ON ANCHOR SIZE, EMBEDMENT DEPTH, SPACING AND EDGE DISTANCE.

7.1.1 POST-INSTALLED ANCHORS SHALL BE INSTALLED IN ACCORDANCE WITH THE MANUFACTURER'S PRINTED INSTALLATION INSTRUCTIONS.

8 STRUCTURAL STEEL:
8.1 DESIGN CODE: SPECIFICATION FOR STRUCTURAL STEEL BUILDINGS (AISC 360), LATEST ADOPTION.
8.2 MATERIAL SPECIFICATIONS (UNLESS NOTED OTHERWISE):
- STRUCTURAL STEEL ROLLED SHAPES, PLATES & BARS .... ASTM A36
- HOLLOW STRUCTURAL SECTIONS .... ASTM A500, GR B
- CONNECTION BOLTS .... ASTM A325
- THREADED RODS .... ASTM A36
- ANCHOR RODS .... ASTM F1554, GR 36
- WELDS (E70XX ELECTRODES) .... AWS D1.1
- NON-SHRINK GROUT (7,000 PSI) .... ASTM C1107, GR. A

8.3 ALL STRUCTURAL STEEL SHALL BE FABRICATED AND ERECTED ACCORDING TO THE SPECIFICATIONS OF THE AMERICAN INSTITUTE OF STEEL CONSTRUCTION (AISC), LATEST ADOPTION. PROVISION 4.4 AND APPENDIX A OF THE AISC CODE OF STANDARD PRACTICE ARE SPECIFICALLY DELETED FROM THE PROJECT CONTRACT DOCUMENTS. THE FABRICATOR SHALL PROVIDE ITS SCHEDULE FOR THE SUBMITTAL OF SHOP AND ERECTION DRAWINGS A MINIMUM OF 14 DAYS PRIOR TO FIRST SUBMITTAL.
8.4 ALL COLUMNS, ANCHOR BOLTS, BASE PLATES, ETC. HAVE BEEN DESIGNED FOR THE FINAL COMPLETED CONDITION AND HAVE NOT BEEN INVESTIGATED FOR POTENTIAL LOADINGS ENCOUNTERED DURING STEEL ERECTION AND CONSTRUCTION. CONFORMANCE TO OR DEVIATION FROM ALLOWABLE CAPACITIES DURING ERECTION IS THE SOLE RESPONSIBILITY OF THE CONTRACTOR (SEE GENERAL NOTES).
8.5 BEAMS SHALL BE FABRICATED AND ERECTED FOR PLACEMENT WITH THE NATURAL CAMBER UP.
8.6 ALL WELDING SHALL BE PERFORMED IN ACCORDANCE WITH AWS D1.1. UNLESS OTHERWISE NOTED, PROVIDE CONTINUOUS FILLET WELDS PER AISC REQUIREMENTS MEETING MINIMUM THICKNESSES ALLOWED PER THICKNESS OF MATERIAL WELDED. ALL FILLER MATERIAL SHALL HAVE A MINIMUM YIELD STRENGTH OF 58 KSI.
8.7 STRUCTURAL STEEL PERMANENTLY EXPOSED TO VIEW SHALL BE SHOP-PRIMED WITH ONE COAT OF SSPC 15-68, TYPE 1 (RED OXIDE) PAINT. DAMAGE DURING TRANSPORTING, ERECTING AND FIELD WELDING PROCESSES SHALL BE REPAIRED TO MATCH THE SHOP APPLIED COATING. STRUCTURAL STEEL PERMANENTLY EXPOSED TO WEATHER INCLUDING BRICK SHELF ANGLES AND ALL OTHER EXTERIOR WALL LINTELS SHALL BE HOT-DIPPED GALVANIZED IN ACCORDANCE WITH ASTM A123. PROVIDE VENT HOLES FOR GALVANIZING AS REQUIRED. SEAL ALL VENT HOLES AFTER GALVANIZING. REPAIR OF GALVANIZED SURFACES SHALL BE PERFORMED WITH A MINIMUM OF 2 COATS OF COLD-GALVANIZING PRODUCT.

9 WOOD:
9.1 DESIGN CODE: NATIONAL DESIGN SPECIFICATION (NDS) FOR WOOD CONSTRUCTION (AF&PA), LATEST ADOPTION.
9.2 MATERIALS (FOLLOWING INDICATE MINIMUM GRADES UNO ON DRAWINGS):

DESCRIPTION		SPECIES & GRADE		DESIGN VALUES (PSI)				COMMENTS
				Fb	Fc⊥	Fc∥	E (x10[6])	
FRAMING LUMBER	Dimensional Lumber (2"-4")	SPRUCE-PINE-FIR	NO. 2	875	425	1150	1.4	
	Timbers (5"x5" and larger)	SPRUCE-PINE-FIR	NO. 2	500	425	500	1.0	
STUD BEARING WALLS (STUDS)		SPRUCE-PINE-FIR	NO. 2	875	425	1150	1.4	
LAMINATED VENEER LUMBER (LVL)		1.9E		2600	750	2510	1.9	
LUMBER (PSL)		2.0E		2900	750	2900	2	
BOTTOM PLATES AT FOUNDATION WALLS (IN CONTACT WITH CONCRETE)		SOUTHERN-PINE	NO. 2	1000	565	1400	1.4	PRESSURE PRESERVATIVE TREATED

9.2.1 ROOF DECK: 3/4" (NOMINAL) EXTERIOR GRADE APA RATED PLYWOOD, FACE GRAIN ACROSS SUPPORTS, JOINTS TO BE STAGGERED WITH PLYWOOD ROOF SHEATHING CLIPS AT 24" OC. GLUE AND NAIL WITH 8d NAILS AT 6" OC AT ALL EDGES, INTERMEDIATE FRAMING TO BE NAILED WITH 8d NAILS AT 12" OC.
9.2.2 WALL SHEATHING: 1/2" (NOMINAL) EXTERIOR GRADE APA RATED PLYWOOD (OSB) UNO, HORIZONTAL JOINTS TO BE STAGGERED OR BLOCKED. NAIL WITH 8d NAILS AT 6" OC AT ALL EDGES, INTERMEDIATE FRAMING TO BE NAILED WITH 8d NAILS AT 12" OC, UNO AT SHEAR WALL LOCATIONS. SEE SHEAR WALL SCHEDULE FOR ADDITIONAL INFORMATION.
9.2.3 BUILT UP STUDS, HEADERS, BEAMS, COLUMNS, AND OTHER MEMBERS TO BE CONNECTED PER IBC FASTENING SCHEDULE (UNO ON DRAWINGS)
9.3 WALL STUDS SHALL BE CONSTRUCTED IN TIGHT CONTACT WITH TOP PLATES, HEADERS, AND BOTTOM PLATES.
9.4 SPLICES IN AXIALLY LOADED STUDS ARE NOT PERMITTED. ALL NAILS TO BE FULLY DRIVEN WITH HEAD FLUSH TO SURFACE. NEITHER UNDER-DRIVE NOR OVER-DRIVE NAILS UNO.
9.5 PROVIDE POSTS AT EACH LEVEL BELOW POSTS ABOVE, MATCH POST SIZE ABOVE, UNLESS NOTED OTHERWISE.
9.6 WHERE LINTELS (HEADERS) FRAME INTO STUD WALLS, PROVIDE DOUBLE STUDS BELOW BEARING FOR 1 AND 2-MEMBER LINTELS UNO. PROVIDE A MINIMUM OF 2 FULL HEIGHT STUDS ADJACENT TO BEARING STUDS, UNLESS NOTED ON DRAWINGS.
9.7 DO NOT CUT CHORD OR WEB MEMBERS OF TRUSSES OR PRE-FABRICATED JOISTS. IF THERE IS INTERFERENCE, NOTIFY THE ENGINEER FOR DIRECTION. CUTTING OF PRE-FABRICATED JOISTS MUST COMPLY WITH MANUFACTURER'S RECOMMENDATIONS.
9.8 SILL PLATES IN CONTACT WITH CONCRETE OR MASONRY SHALL BE PRESSURE PRESERVATIVE TREATED.
9.9 ALL LUMBER CONNECTORS TO BE SUPPLIED BY USP OR SIMPSON STRONG-TIE. WHERE LUMBER CONNECTORS ARE TO BE USED BUT ARE NOT CALLED OUT IN THESE DRAWINGS THEY ARE TO BE DESIGNED AND SUPPLIED BY USP OR SIMPSON STRONG-TIE FOR THE REACTION SHOWN ON THESE DRAWINGS. WHEN USING STEEL LUMBER CONNECTORS FILL ALL NAIL HOLES TO ACHIEVE PUBLISHED VALUE. WHERE MORE STRINGENT, THESE DRAWINGS SUPERSEDE DIRECTIONS IN PRODUCT CATALOG BUT REFER TO PRODUCT CATALOG FOR TYPICAL INSTALLATION INSTRUCTIONS.

10 WOOD TRUSSES:
10.1 DESIGN, FABRICATION AND CONSTRUCTION OF PRE-ENGINEERED WOOD TRUSSES SHALL CONFORM TO THE LATEST ADOPTION OF THE NATIONAL DDESIGN SPECIFICATION (NDS) FOR WOOD CONSTRUCTION (ANSI/AWS) AND THE NATIONAL DESIGN STANDARD FOR METAL PLATE CONNECTED WOOD TRUSS CONSTRUCTION (ANSI/TPI 1, LATEST EDITION) OF THE TPI.
10.2 TRUSS DEPTHS AND PROFILES ARE SHOWN IN THE PLANS. MATERIALS AND DESIGN ARE PER MANUFACTURER FOR LOADS INDICATED. LIVE LOAD DEFLECTION OF OVERALL MEMBER SHALL BE LIMITED TO A MAXIMUM OF L/480. LIVE LOAD DEFLECTION OF TOP CHORD SHALL BE LIMITED TO A MAXIMUM OF L/480 BETWEEN PANEL POINTS. INSTALLATION SHALL BE IN ACCORDANCE WITH MANUFACTURER'S STANDARD SPECIFICATIONS, COMPLETE WITH BRACING CONNECTIONS INCLUDING TRUSS HANGERS AND UPLIFT ANCHORS, AND ALL OTHER NECESSARY ACCESSORIES FOR COMPLETE INSTALLATION.
10.3 CONNECTOR PLATES SHALL BE NOT LESS THAN 0.036 INCHES (20 GAUGE) IN UNCOATED THICKNESS, SHALL MEET OR EXCEED ASTM GRADE A OR HIGHER AND SHALL BE HOT DIPPED GALVANIZED ACCORDING TO ASTM A653 (COATING G60). MINIMUM STEEL YIELD STRESS SHALL BE 33,000 PSI.
10.4 TRUSSES SHALL BE FABRICATED IN A PROPERLY EQUIPPED MANUFACTURING FACILITY. TRUSSES SHALL BE MANUFACTURED BY EXPERIENCED WORKERS, USING PRECISION CUTTING, JIGGING AND PRESSING EQUIPMENT UNDER THE REQUIREMENTS IN THE ANSI/TPI 1.
10.5 WOOD TRUSSES SHALL BE ERECTED IN ACCORDANCE WITH THE TRUSS MANUFACTURER'S REQUIREMENTS. THIS WORK SHALL BE DONE BY A QUALIFIED AND EXPERIENCED CONTRACTOR.
10.6 THE CONTRACTOR SHALL PROVIDE ALL TEMPORARY AND PERMANENT BRACING AS REQUIRED FOR SAFE ERECTION AND PERFORMANCE OF THE TRUSSES. THE GUIDELINES SET FORTH BY THE TPI PUBLICATION "BUILDING COMPONENT SAFETY INFORMATION, BCSI 2006: GUIDE TO GOOD PRACTICE FOR HANDLING, INSTALLING, RESTRAINING & BRACING OF METAL PLATE CONNECTED WOOD TRUSSES" SHALL BE A MINIMUM REQUIREMENT.
10.7 TRUSS MEMBERS AND COMPONENTS SHALL NOT BE CUT, NOTCHED, DRILLED NOR OTHERWISE ALTERED IN ANY WAY WITHOUT THE WRITTEN APPROVAL OF THE TRUSS SUPPLIER'S STRUCTURAL ENGINEER.
10.8 TRUSSES SHALL BE PERMANENTLY BRACED PER WTCA COMMENTARY FOR PERMANENT BRACING OF METAL PLATE CONNECTED WOOD TRUSSES. TEMPORARY BRACING (IF REQUIRED) IS THE RESPONSIBILITY OF THE CONTRACTOR AND SHALL BE PER DSB-89 AND HIB-91 AS A MINIMUM.
10.9 COORDINATE MECHANICAL EQUIPMENT LOADS AND LOCATIONS WITH MECHANICAL/ARCHITECTURAL DRAWINGS AND MECHANICAL CONTRACTOR.

11 SUBMITTALS:
11.1 GENERAL SUBMITTAL REQUIREMENTS
11.1.1 CONTRACTOR SHALL REVIEW, STAMP, SIGN AND DATE ALL SUBMITTALS PRIOR TO FORWARDING TO ARCHITECT/ENGINEER. THE ENGINEER'S REVIEW IS FOR CONFORMANCE WITH THE DESIGN CONCEPT AND GENERAL COMPLIANCE WITH THE RELEVANT CONTRACT DOCUMENTS. THE ENGINEER'S REVIEW DOES NOT RELIEVE THE CONTRACTOR OF THE SOLE RESPONSIBILITY TO REVIEW, CHECK AND COORDINATE THE SUBMITTALS THE CONTRACTOR REMAINS SOLELY RESPONSIBLE FOR ERRORS AND OMISSIONS IN THE SUBMITTALS.
11.1.2 SHOP DRAWINGS SHALL BE IN THE FORM OF BLACK-LINE PRINTS OR PORTABLE DOCUMENT FORMAT (PDF) FOR REVIEW. DRAWINGS LISTED BELOW AS "CERTIFIED" SHALL BEAR THE SIGNED AND DATED SEAL OF A PROFESSIONAL ENGINEER REGISTERED IN THE STATE WHERE THE PROJECT IS LOCATED. IN NO CASE SHALL REPRODUCTIONS OF THE CONTRACT DRAWINGS BE USED AS SHOP DRAWINGS. DRAWINGS SHALL SHOW ERECTION PLANS, DIMENSIONS, BRACING AND BRIDGING REQUIREMENTS, DETAILS, SUPPORTED MECHANICAL EQUIPMENT AND PIPING. SUBMITTALS ARE REQUIRED.
11.1.3 SHOP DRAWINGS AND CALCULATIONS SHALL BE SUBMITTED PRIOR TO FABRICATION
11.2 CONCRETE:
11.2.1 CONCRETE MIX DESIGN(S) SHALL BE SUBMITTED TO ENGINEER FOR REVIEW.
11.2.2 REINFORCING STEEL SHOP DRAWINGS.
11.3 STRUCTURAL STEEL:
11.3.1 SHOP DRAWINGS
11.4 WOOD:.
11.4.1 CERTIFIED PRE-MANUFACTURED WOOD TRUSS SHOP DRAWINGS AND CALCULATIONS. SHOP DRAWINGS SHOULD BE SEALED BY ENGINEER IN CHARGE OF DESIGN IN THE STATE OF NORTH CAROLINA.
11.4.1.1 CALCULATIONS SHALL INCLUDE MEMBER SIZES, SPECIES, GRADE AND MOISTURE CONTENT.
11.5 MASONRY:
11.5.1 MASONRY PRODUCT DATA
11.5.1.1 FABRICATED WIRE REINFORCEMENT, CONTROL JOINT INSERTS, STRAP ANCHORS, WALL TIES, FLEXIBLE ANCHORS, REBAR POSITIONERS
11.5.1.2 GROUT AND MORTAR MATERIALS
11.5.2 REINFORCING STEEL SHOP DRAWINGS.

12 SPECIAL INSPECTION:
12.1 SPECIAL INSPECTION IS REQUIRED IN ACCORDANCE WITH IBC SECTION 1701 THE FOLLOWING PORTIONS OF CONSTRUCTION:
12.1.1 SOILS:
12.1.2 BACKFILL AND COMPACTION
12.1.3 CONCRETE:
12.1.3.1 DURING TAKING OF TEST SPECIMENS.
12.1.3.2 REINFORCEMENT – PRIOR TO PLACING CONCRETE.
12.1.3.3 BOLTS INSTALLED IN CONCRETE.
12.1.4 STRUCTURAL STEEL:
12.1.4.1 ONLY APPROVED FABRICATORS IN ACCORDANCE WITH IBC 1704.2.2 SHALL BE USED.
12.1.4.2 FULL TIME INSPECTION IN ACCORDANCE WITH AISC 341 SHALL BE REQUIRED EXCEPT FOR THE FOLLOWING ITEMS WHICH REQUIRE PERIODIC INSPECTION, INCLUDING 100% VISUAL INSPECTION:
12.1.4.3 SINGLE-PASS FIELD-PERFORMED FILLET WELDS NOT EXCEEDING 5/16".
12.1.4.4 WELDING OF REINFORCING STEEL.
12.1.4.5 VERIFICATION OF WELDER QUALIFICATIONS, WELDING PROCEDURES AND MATERIALS.
12.1.4.6 VERIFICATION OF MATERIALS.
12.1.4.7 VERIFICATION OF TIGHTENING METHOD.
12.1.4.8 PERIODIC INSPECTION, INCLUDING RANDOM VERIFICATION OF PROPER TIGHTENING.
12.1.5 EXPANSION AND ADHESIVE ANCHORS.
12.1.5.1 PERIODIC INSPECTION DURING ANCHORAGE.
12.2 WOOD FRAMING:
12.2.1 WIND RESISTANCE SYSTEM (SHEAR WALL SHEATHING ATTACHMENT)
12.3 REPORTS FOR THE ABOVE SHALL BE SUBMITTED TO THE ENGINEER. ALL REPORTS SHALL CLEARLY INDICATE COMPLIANCE OR NON-COMPLIANCE.
12.4 THE CONTRACTOR SHALL NOTIFY THE SPECIAL INSPECTOR AT LEAST 48 HOURS IN ADVANCE FOR WORK THAT WILL REQUIRE INSPECTION OR TESTING.
12.5 UPON COMPLETION OF EACH PHASE OF THE WORK, THE SPECIAL INSPECTOR SHALL SUBMIT A LETTER STATING COMPLIANCE WITH AND VARIANCES FROM THE PROJECT REQUIREMENTS (IF ANY).
12.6 UPON COMPLETION OF THE PROJECT, THE SPECIAL INSPECTOR SHALL SUBMIT A LETTER STATING COMPLIANCE WITH THE PROJECT REQUIREMENTS INCLUDING MEASURES TAKEN TO CORRECT PREVIOUSLY IDENTIFIED NON-COMPLYING ITEMS.

ABBREVIATIONS

ACI	AMERICAN CONCRETE INSTITUTE	AWPA	AMERICAN WOOD PROTECTION ASSOCIATION
AF&PA	AMERICAN FOREST & PAPER ASSOCIATION	AWS	AMERICAN WELDING SOCIETY
AISC	AMERICAN INSTITUTE OF STEEL CONSTRUCTION	CRSI	CONCRETE REINFORCING STEEL INSTITUTE
AISI	AMERICAN IRON AND STEEL INSTITUTE	OSHA	OCCUPATIONAL SAFETY AND HEALTH ADMINISTRATION
APA	ENGINEERED WOOD ASSOCIATION	TPI	TRUSS PLATE INSTITUTE
ASTM	AMERICAN SOCIETY FOR TESTING AND MATERIALS	WTCA	WOOD TRUSS COUNCIL OF AMERICA

CONSULTANT

VAA
VAA, LLC
2300 Berkshire Lane N, Suite 200
Plymouth, MN 55441
763.559.9100
www.vaaeng.com
Project # 252795

CLIENT

Alliance DEVELOPMENT

FRED JACQUES
ALLIANCE DEVELOPMENT
230 OHIO ST, SUITE 200
OSHKOSH, WI 54902
(612) 313-0126

PROJECT INFORMATION

SOUTH LA CROSSE SHELL
MORMON COULEE RD & LOSEY BLVD S
LA CROSSE, WI 54601

SEAL

NOT FOR CONSTRUCTION

PROJECT NO. 252795
DRAWN BY BES/MRP
CHECKED BY MSN/TJM

ISSUE	DATE
PERMIT SET	01.09.2026

REVISION	DATE

TITLE: GENERAL STRUCTURAL NOTES

SHEET NUMBER: **S001**

© COPYRIGHT WILKUS ARCHITECTS

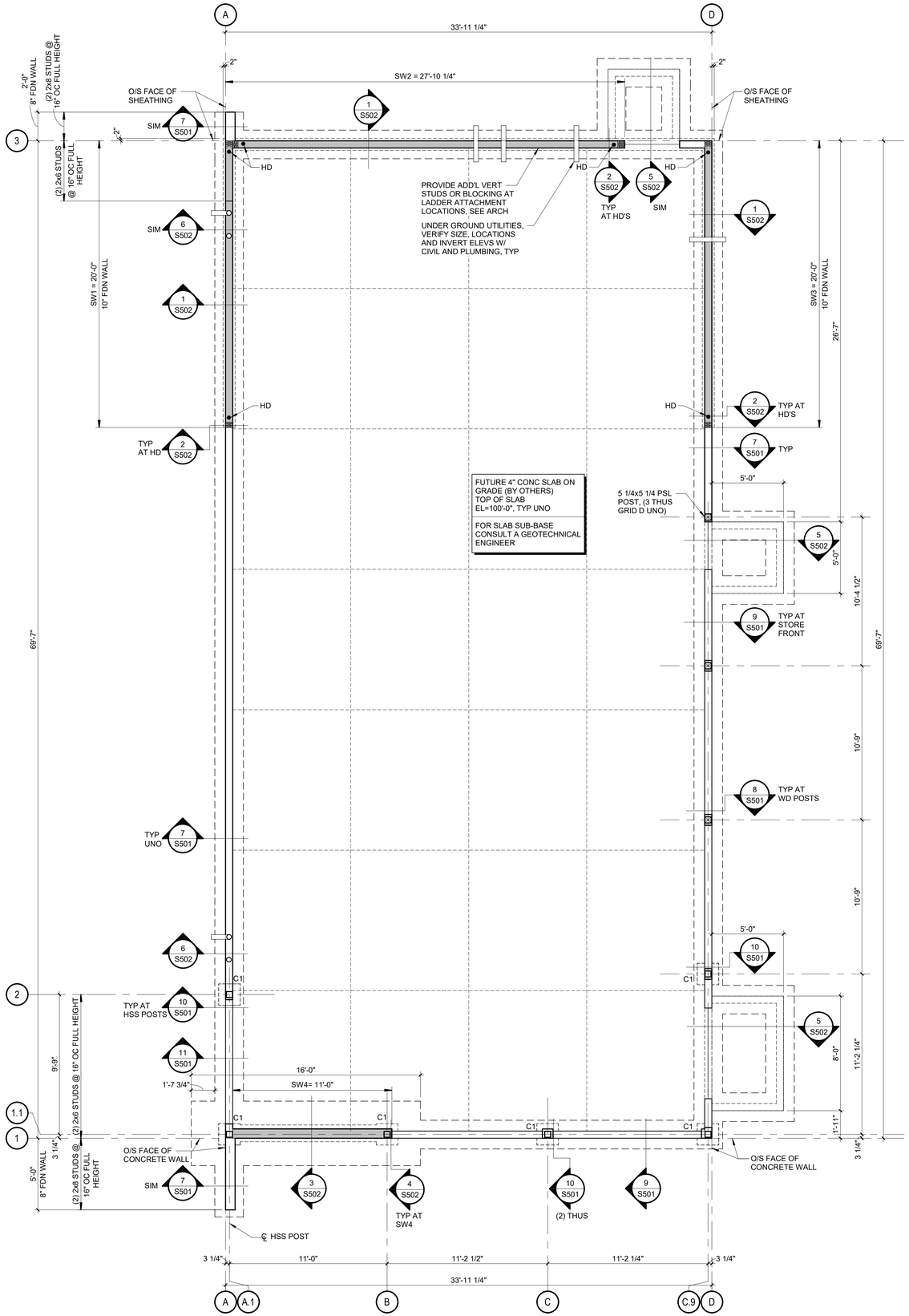

SHEAR WALL SCHEDULE				
MARK	HOLDOWN (HD)	SILL ANCHORS	EDGE NAILS	FIELD NAILS
SW1	HDUE3-SDS3 W/ 5/8" DIA AB	1/2" DIA x 6" @ 16" OC	10d @ 6" OC	10d @ 12" OC
SW2	HDUE3-SDS3 W/ 5/8" DIA AB	1/2" DIA x 6" @ 16" OC	10d @ 6" OC	10d @ 12" OC
SW3	HDUE3-SDS3 W/ 5/8" DIA AB	1/2" DIA x 6" @ 16" OC	10d @ 6" OC	10d @ 12" OC
SW4	COLUMN	1/2" DIA x 6" @ 16" OC	10d @ 6" OC (SHEATHING BOTH SIDES)	10d @ 12" OC

NOTES:
1. FOR TYPICAL SHEAR WALL LAYOUT INFORMATION SEE 2/S101.
2. ALL HOLDOWNS INDICATED ARE MANUFACTURED BY SIMPSON. INSTALL PER MANUFACTURER'S INSTALLATION INSTRUCTIONS.
3. FOR TYPICAL HOLDOWN DETAIL SEE 2/S502. AT SHEAR WALL SW4, SEE 4/S502.
4. PROVIDE BOUNDARY STUDS AT EACH END OF THE SHEAR WALL AT HOLDOWN LOCATIONS OF THE SAME MATERIAL OF THE TYPICAL WALL FRAMING. REFER TO MANUFACTURER'S INSTALLATION INSTRUCTIONS FOR THE SIZE OF STUDS REQUIRED.
5. ALL SHEAR WALL SILL ANCHOR BOLTS TO BE SIMPSON TITEN HD ANCHORS.
6. PROVIDE 1/2" NOMINAL APA EXTERIOR OSB WALL SHEATHING ON THE OUTSIDE FACE AT ALL SHEAR WALL LOCATIONS, UNO.
7. ALL PANEL EDGES SHALL BE LOCATED ON STUDS, HORIZONTAL BLOCKING, OR TOP/BOTTOM PLATES.
8. FASTENER SUBSTITUTIONS ARE NOT PERMITTED, UNLESS APPROVED ENGINEER REVIEW IS COMPLETED AT CONTRACTOR'S EXPENSE.
9. FOR TRIPLE TOP PLATE SPLICE, SEE 4/S504.

COLUMN - MARK/SIZE/BASE PL/COMMENTS				
		BASE PLATE		
MARK	SIZE	SIZE	TYPE	COMMENTS
C1	HSS5x5x1/4	1"x11"x0'-11"	A	

NOTES:
1. FOR BASE PLATE AND ANCHOR BOLT LAYOUT SEE 7/S502.

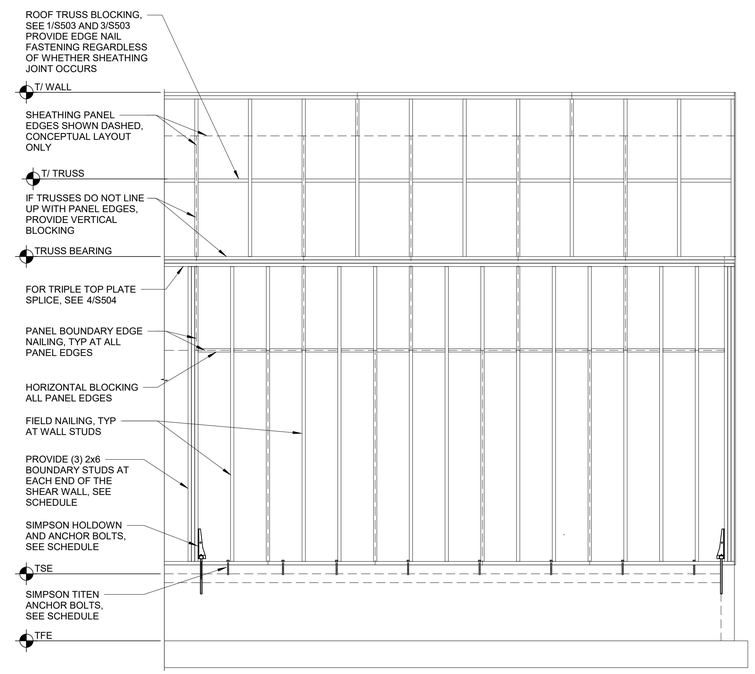

2 S101 SHEAR WALL ELEVATION
3/8" = 1'-0"

NORTH

1 S101 FOUNDATION PLAN
1/4" = 1'-0"

PLAN NOTES:

1. FOR GENERAL STRUCTURAL NOTES SEE SHEET S001.
2. TOP OF FOOTING ELEVATION (TFE) = 96'-6" TYP AT EXTERIOR UNO.
3. S— —S DENOTES STEPPED FOOTING, SEE TYPICAL STEPPED FOOTING DETAIL 3/S501. VERIFY FOOTING LOCATIONS W/ FINAL CIVIL TO ENSURE PROPER FROST PROTECTION.
4. SEE ARCHITECTURAL, MECHANICAL AND ELECTRICAL DRAWINGS FOR SLAB SLOPES, DRAINS, CURBS, HOUSEKEEPING PADS, ETC.
5. FOR TYPICAL BAR BENDING IN REINFORCED CONCRETE SEE 1/S501.
6. FOR TYPICAL CORNER REINFORCING IN FOOTINGS SEE 2/S501.
7. FOR UTILITIES RUNNING PARALLEL TO FOUNDATIONS SEE 4/S501.
8. FOR UTILITIES RUNNING PERPENDICULAR TO FOUNDATIONS SEE 5/S501.
9. 'SWx' ON PLAN DENOTES SHEAR WALL TYPE, SEE SCHEDULE ON THIS SHEET.
10. INDICATES EXTENTS OF PLYWOOD SHEAR WALL.
11. "HD' ON PLAN DENOTES SHEAR WALL HOLDOWN ANCHOR, SEE SCHEDULE ON THIS SHEET.
12. FOR ELECTRICAL GROUNDING, SEE 12/S501. VERIFY LOCATION WITH ELECTRICAL CONTRACTOR.
13. FOR TRASH ENCLOSURE STRUCTURAL PLAN AND DETAILS, SEE SHEET S102. FOR PLAN LOCATION AND ORIENTATION, SEE ARCH AND CIVIL.
14. FOR SITE LIGHT POLE BASE DETAIL, SEE 4/S102.
15. 'Cx' ON PLAN DENOTES COLUMN TYPE, SEE SCHEDULE ON THIS SHEET.

© COPYRIGHT WILKAS ARCHITECTS

CONSULTANT

VAA, LLC
2300 Berkshire Lane N, Suite 200
Plymouth, MN 55441
783.559.9100
www.vaaeng.com
Project # 252795

CLIENT

Alliance DEVELOPMENT

FRED JACQUES
ALLIANCE DEVELOPMENT
230 OHIO ST, SUITE 200
OSHKOSH, WI 54902
(612) 313-0126

PROJECT INFORMATION

SOUTH LA CROSSE SHELL

MORMON COULEE RD & LOSEY BLVD S
LA CROSSE, WI 54601

SEAL

NOT FOR CONSTRUCTION

PROJECT NO.	252795
DRAWN BY	BES/MRP
CHECKED BY	MSN/TJM

ISSUE	DATE
PERMIT SET	01.09.2026

REVISION	DATE

TITLE:

FOUNDATION PLAN

SHEET NUMBER:

S101

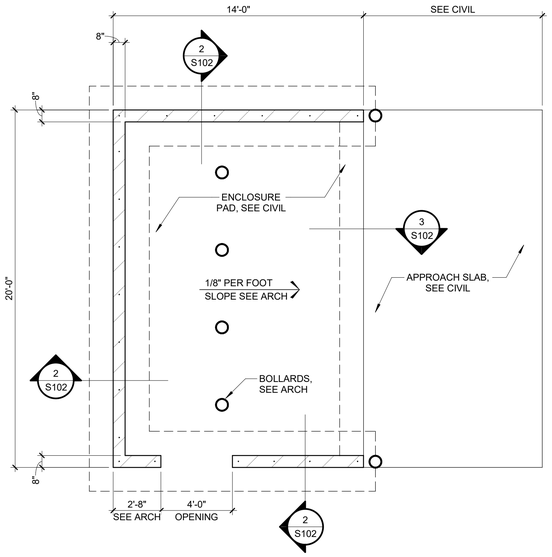

1 S102 TRASH ENCLOSURE FOUNDATION PLAN
1/4" = 1'-0"

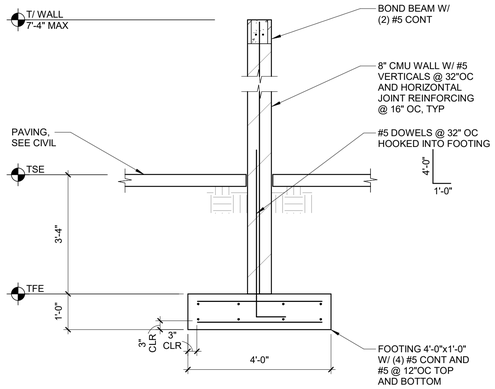

2 S102 TRASH ENCLOSURE WALL DETAIL
1/2" = 1'-0"

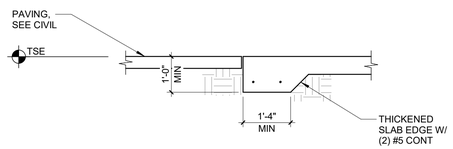

3 S102 TRASH ENCLOSURE DETAIL
1/2" = 1'-0"

NOTES:
1. REFER TO ELECTRICAL FOR EMBEDDED CONDUIT, ETC
2. COORDINATE POLE LOCATIONS W/ SITE LIGHTING AND CIVIL PLANS
3. CONTRACTOR TO NOTIFY ENGINEER IF SPECIFICATIONS VARY FROM THOSE SHOWN
4. FOUNDATION SHALL HAVE 200PSF MINIMUM ALLOWABLE END BEARING.
5. SOIL SHALL HAVE 100PSF LATERAL BEARING PRESSURE.

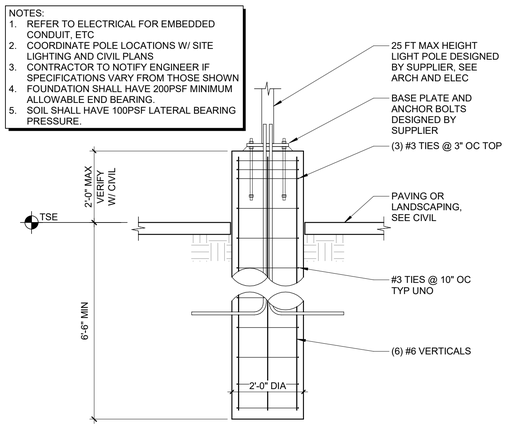

4 S102 SITE LIGHT POLE BASE
1/2" = 1'-0"

© COPYRIGHT WILKUS ARCHITECTS

CONSULTANT

VAA, LLC
2300 Berkshire Lane N, Suite 200
Plymouth, MN 55441
763.559.9100
www.vaaeng.com
Project # 252795

CLIENT

Alliance DEVELOPMENT

FRED JACQUES
ALLIANCE DEVELOPMENT
230 OHIO ST, SUITE 200
OSHKOSH, WI 54902
(612) 313-0126

PROJECT INFORMATION

SOUTH LA CROSSE SHELL

MORMON COULEE RD & LOSEY BLVD S
LA CROSSE, WI 54601

SEAL

NOT FOR CONSTRUCTION

PROJECT NO.	252795
DRAWN BY	BES/MRP
CHECKED BY	MSN/TJM

ISSUE	DATE
PERMIT SET	01.09.2026

REVISION	DATE

TITLE:
STRUCTURAL SITE DETAILS

SHEET NUMBER:
S102

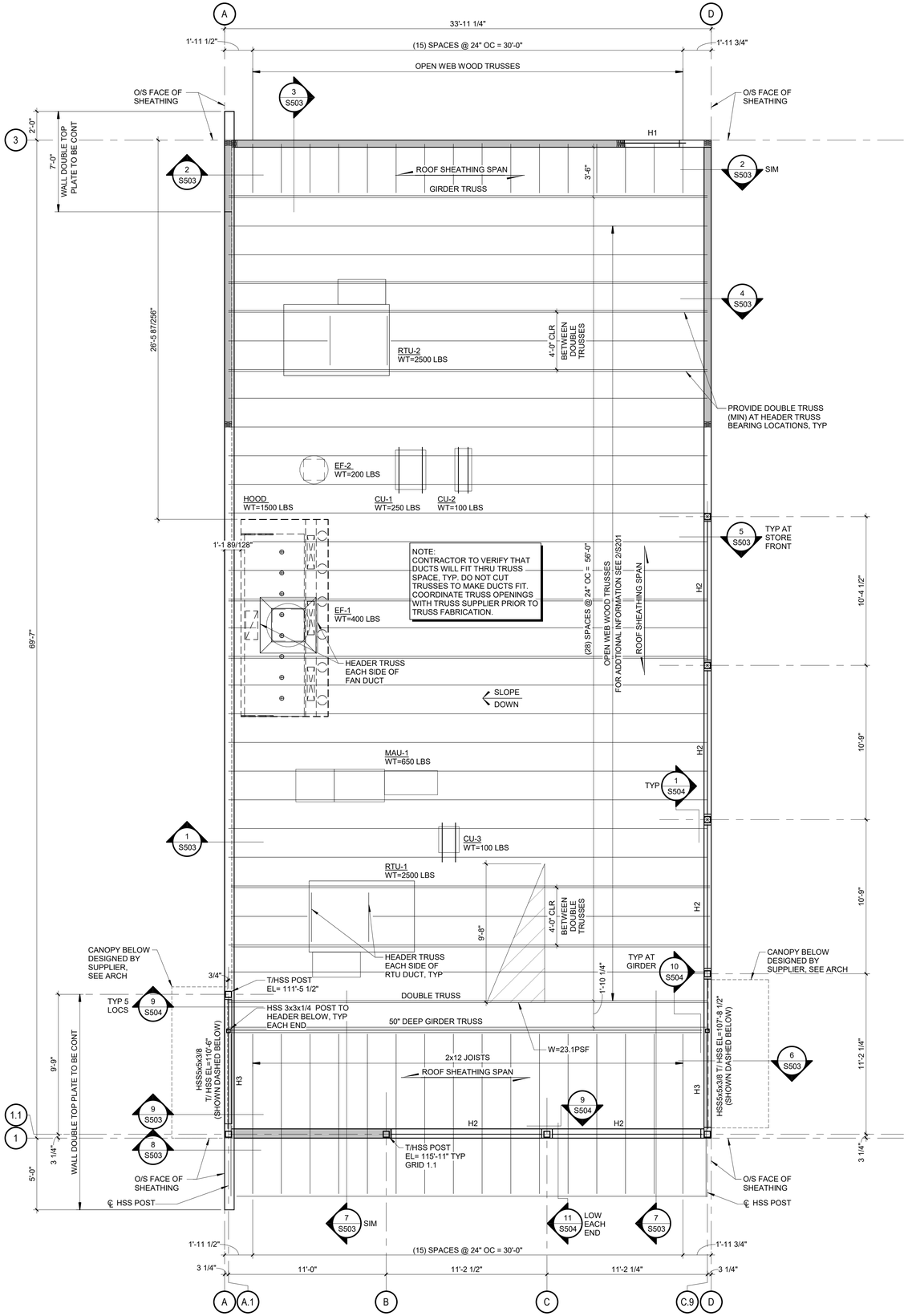

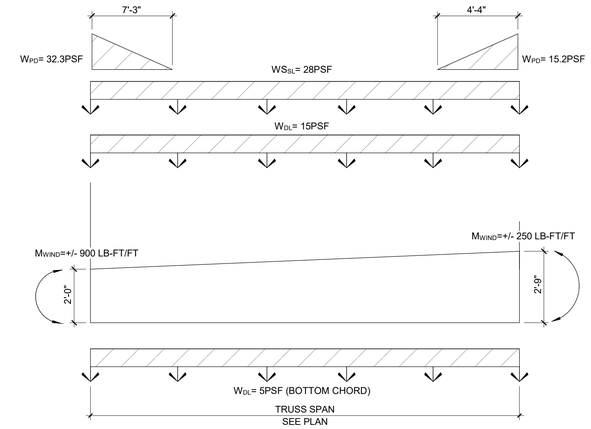

NOTE:
1. FOR ROOF TOP MECHANICAL UNITS (RTU) LOADS, SEE PLAN.
2. TRUSS DESIGN TO INCLUDE PIPING LARGER THAN 4" DIAMETER AND EQUIPMENT HEAVIER THAN 200 LBS. COORDINATE WITH ALL DISCIPLINES.
3. BOTTOM CHORD TO BE DESIGNED FOR A 250 LB LL AT ANY POINT ON THE TRUSS.
4. FOR ADDITIONAL SNOW DRIFT LOADS, SEE 1/S201.
5. WIND UPLIFT NOT SHOWN ON DIAGRAM. REFER TO UPLIFT TABLE IN GENERAL STRUCTURAL NOTES ON SHEET S001.
6. DESIGN TRUSSES FOR MINIMUM AXIAL LOAD OF 350 LBS. AT POSTS PROVIDE ADD'L 1500 LBS PER 1/S504.
7. END MOMENTS ARE DUE TO COMPONENT AND CLADDING WIND (1.0W) ON PARAPETS. PARAPET FRAMING SHALL BE INTEGRAL TO TRUSS. SEE ROOF DETAILS FOR ADDITIONAL INFORMATION.

2/S201 ROOF TRUSS LOAD DIAGRAM

HEADER SCHEDULE

MARK	HEADER SIZE	BEARING STUDS	FULL HEIGHT STUDS	COMMENTS
H1	(3) 2x8	(1) 2X6	(2) 2X6	
H2	(3) 1 3/4x9 1/4 LVL	N/A	N/A	SEE NOTE 1
H3	(3) 1 3/4x11 1/4 LVL	N/A	N/A	SEE NOTE 1

NOTES:
1. PROVIDE SIMPSON HUCQ612-SDS EACH END. ATTACH TO WOOD POST PER MANUFACTURER'S INSTRUCTIONS. ATTACH TO HSS POST WHERE OCCURS PER 9/S504.
2. SHIM SIMPSON HANGER TO HEADER AS REQUIRED.
3. FOR ADDITIONAL INFORMATION, SEE 2/S504.

NORTH

1/S201 ROOF FRAMING PLAN

1/4" = 1'-0"

PLAN NOTES:

1. FOR GENERAL STRUCTURAL NOTES SEE SHEET S001.
2. TRUSS BEARING ELEVATION AND TOP OF WALL EL=111'-10", TYP UNO.
3. INDICATES PLYWOOD SHEAR WALL EXTENTS.
4. "Hx" ON PLAN DENOTES WOOD HEADER, SEE SCHEDULE THIS SHEET.
5. FOR TYPICAL DROP HEADER DETAIL SEE 2/S504.
6. WHERE PIPE PENETRATES TOP OR BOTTOM WALL PLATES, SEE 3/S504.
7. FOR MECHANICAL EQUIPMENT CURB SUPPORT AND ROOF OPENINGS LARGER THAN 8" SQUARE, SEE 5/S504.
8. FOR ALL LOADS GREATER THAN 250LBS SUSPENDED FROM TRUSS TOP OR BOTTOM CHORD, SEE 7/S504.

© COPYRIGHT WILKUS ARCHITECTS

CONSULTANT

VAA, LLC
2300 Berkshire Lane N, Suite 200
Plymouth, MN 55441
783.559.9100
www.vaaeng.com
Project # 252795

CLIENT

FRED JACQUES
ALLIANCE DEVELOPMENT
230 OHIO ST, SUITE 200
OSHKOSH, WI 54902
(612) 313-0126

PROJECT INFORMATION

SOUTH LA CROSSE SHELL

MORMON COULEE RD & LOSEY BLVD S
LA CROSSE, WI 54601

SEAL

NOT FOR CONSTRUCTION

PROJECT NO.	252795
DRAWN BY	BES/MRP
CHECKED BY	MSN/TJM

ISSUE	DATE
PERMIT SET	01.09.2026

REVISION	DATE

TITLE:
ROOF FRAMING PLAN

SHEET NUMBER:
S201

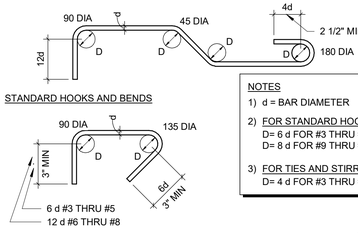

NOTES
1) d = BAR DIAMETER
2) FOR STANDARD HOOK AND BENDS
D= 6 d FOR #3 THRU #8
D= 8 d FOR #9 THRU #11
3) FOR TIES AND STIRRUPS
D= 4 d FOR #3 THRU #5

CLASS "B" LAP	
BAR SIZE	x
#3	22"
#4	30"
#5	36"
#6	44"
#7	66"
#8	74"
#9	84"

1 S501 TYPICAL BAR BENDING DETAIL
1/2" = 1'-0"

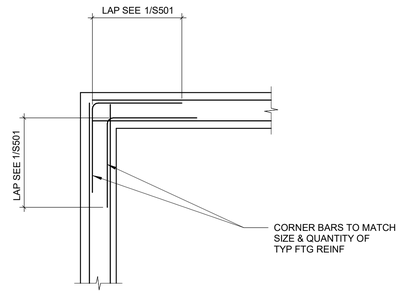

2 S501 TYP CORNER REINF DETAIL
1/2" = 1'-0"

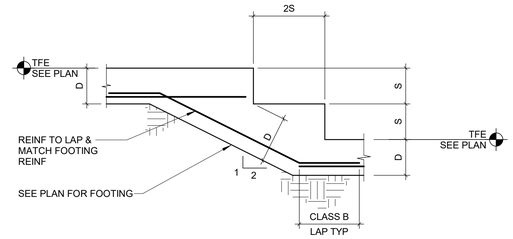

3 S501 TYP STEPPED FOOTING DETAIL
1/2" = 1'-0"

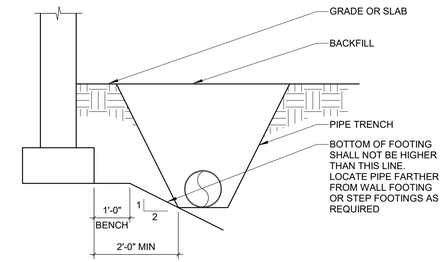

NOTE: CONTRACTOR SHALL BE RESPONSIBLE FOR SHORING, SHEATHING OR OTHERWISE MAINTAINING THE SIDES OF THE EXCAVATION FROM CAVE-IN UNTIL ALL BACKFILL IS COMPLETED

4 S501 TYP FTG PARALLEL TO PIPE
1/2" = 1'-0"

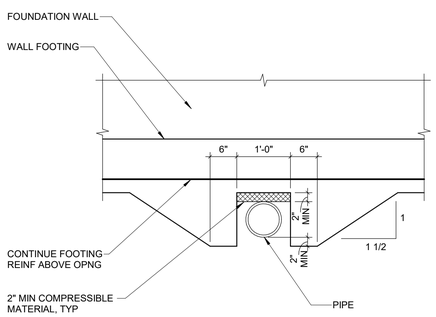

NOTES:
1. DETAIL APPLIES TO PIPES LESS THAN 3'-0" BELOW FOOTING. FOR PIPES MORE THAN 3'-0" BELOW FOOTING BUT LESS THAN 8'-0" PROVIDE LEAN CONCRETE FILL BELOW FOOTING DOWN TO PIPE INVERT ELEVATION.
2. PIPES DEEPER THAN 8'-0" BELOW FOOTING DO NOT REQUIRE LEAN CONCRETE FILL, PROVIDE TRENCH COMPACTED PER SPEC REQUIREMENTS.

5 S501 TYP FTG PERPENDICULAR TO PIPE
3/4" = 1'-0"

6 S501 NOT USED

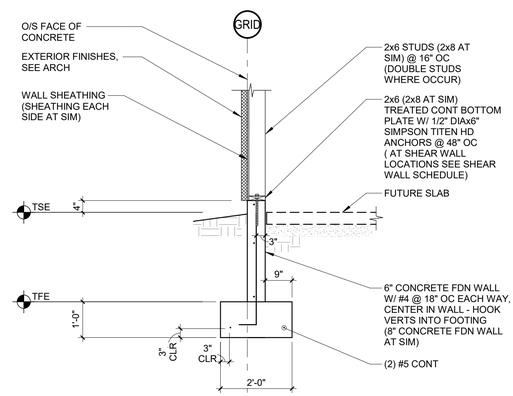

7 S501 FOUNDATION WALL DETAIL
1/2" = 1'-0"

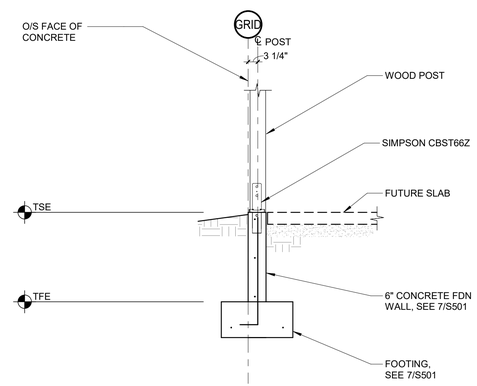

8 S501 FOUNDATION WALL DETAIL
1/2" = 1'-0"

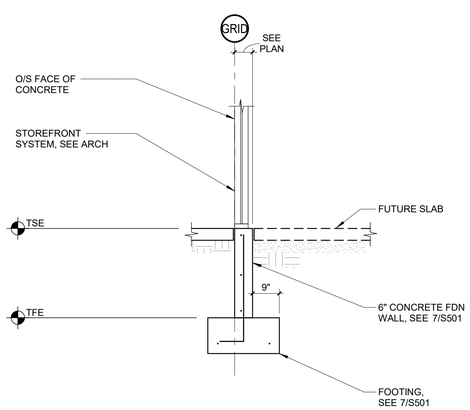

9 S501 FOUNDATION WALL DETAIL
1/2" = 1'-0"

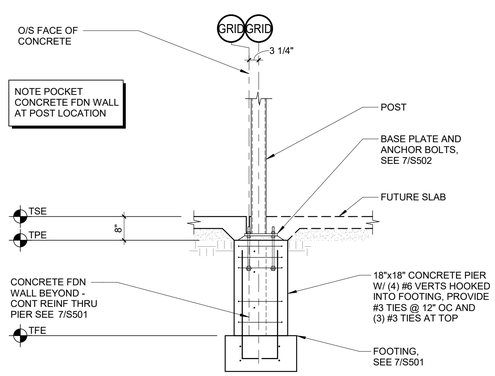

10 S501 EXTERIOR POST DETAIL
1/2" = 1'-0"

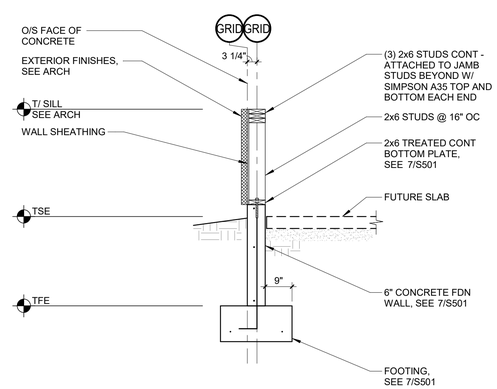

11 S501 FOUNDATION WALL DETAIL
1/2" = 1'-0"

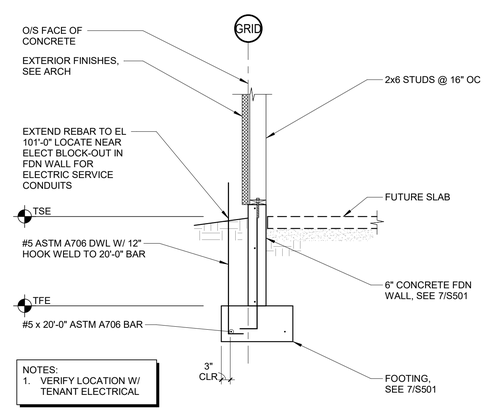

NOTES:
1. VERIFY LOCATION W/ TENANT ELECTRICAL

12 S501 ELECTRICAL GROUND DETAIL
1/2" = 1'-0"

© COPYRIGHT WILKAS ARCHITECTS

CONSULTANT

VAA, LLC
2300 Berkshire Lane N, Suite 200
Plymouth, MN 55441
783.559.9100
www.vaaeng.com
Project # 252795

CLIENT

Alliance DEVELOPMENT

FRED JACQUES
ALLIANCE DEVELOPMENT
230 OHIO ST, SUITE 200
OSHKOSH, WI 54902
(612) 313-0126

PROJECT INFORMATION

SOUTH LA CROSSE SHELL

MORMON COULEE RD & LOSEY BLVD S
LA CROSSE, WI 54601

SEAL

NOT FOR CONSTRUCTION

PROJECT NO.	252795
DRAWN BY	BES/MRP
CHECKED BY	MSN/TJM

ISSUE	DATE
PERMIT SET	01.09.2026

REVISION	DATE

TITLE:
FOUNDATION DETAILS

SHEET NUMBER:
S501

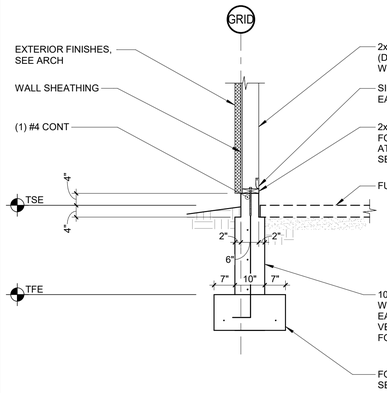

1 S502 SHEAR WALL FOUNDATION
1/2" = 1'-0"

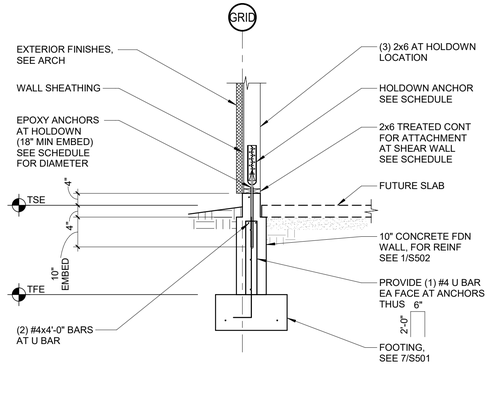

2 S502 HOLDOWN ANCHOR DETAIL
1/2" = 1'-0"

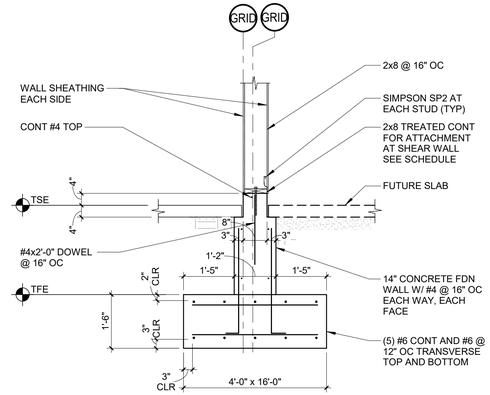

3 S502 SHEAR WALL FOUNDATION
1/2" = 1'-0"

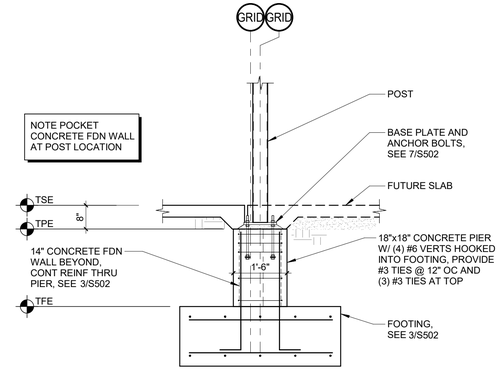

4 S502 HOLDOWN ANCHOR DETAIL
1/2" = 1'-0"

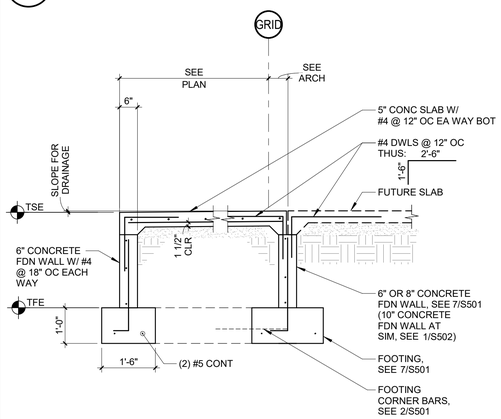

5 S502 STOOP FOUNDATION DETAIL
1/2" = 1'-0"

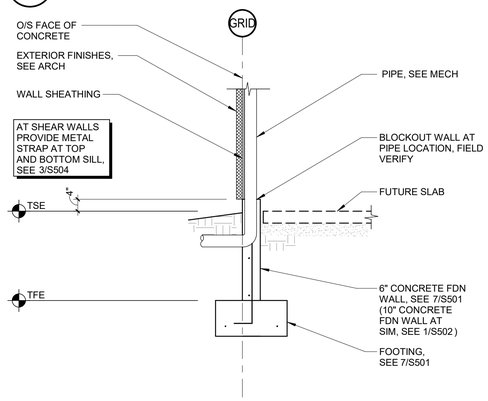

6 S502 FOUNDATION WALL DETAIL
1/2" = 1'-0"

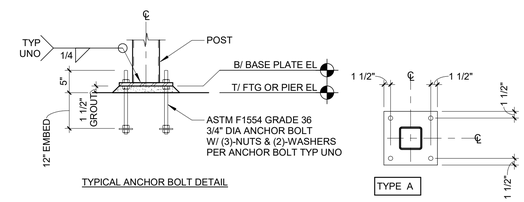

7 S502 BASE PLATE LAYOUT DETAIL
3/4" = 1'-0"

© COPYRIGHT WILKIS ARCHITECTS

CONSULTANT

VAA

VAA, LLC
2300 Berkshire Lane N, Suite 200
Plymouth, MN 55441
783.559.9100
www.vaaeng.com
Project # 252795

CLIENT

Alliance DEVELOPMENT

FRED JACQUES
ALLIANCE DEVELOPMENT
230 OHIO ST, SUITE 200
OSHKOSH, WI 54902
(612) 313-0126

PROJECT INFORMATION

SOUTH LA CROSSE SHELL

MORMON COULEE RD & LOSEY BLVD S
LA CROSSE, WI 54601

SEAL

NOT FOR CONSTRUCTION

PROJECT NO.	252795
DRAWN BY	BES/MRP
CHECKED BY	MSN/TJM

ISSUE	DATE
PERMIT SET	01.09.2026

REVISION	DATE

TITLE:
FOUNDATION DETAILS

SHEET NUMBER:
S502

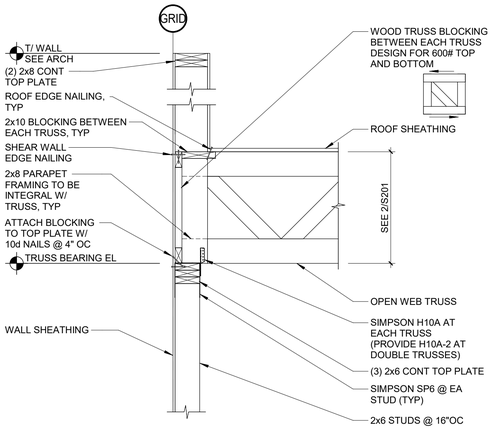

1 S503 TRUSS BEARING DETAIL
3/4" = 1'-0"

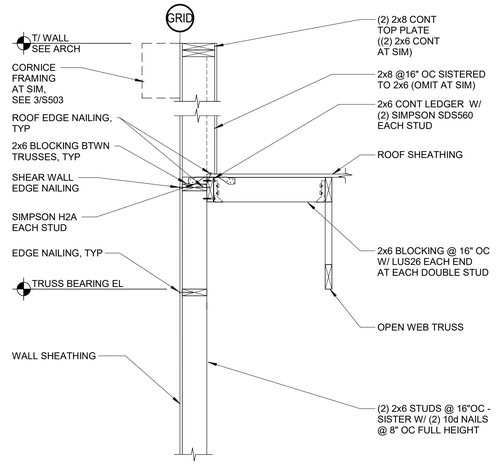

2 S503 TRUSS BEARING DETAIL
3/4" = 1'-0"

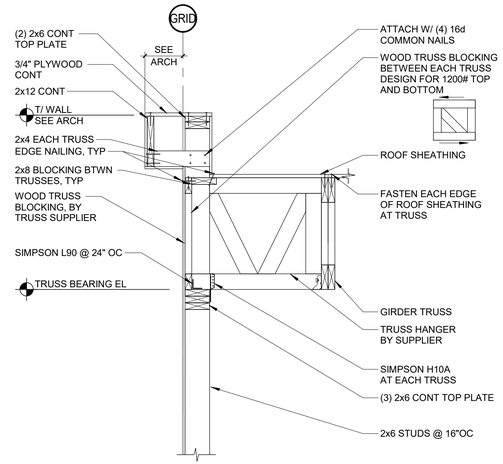

3 S503 TRUSS BEARING DETAIL
3/4" = 1'-0"

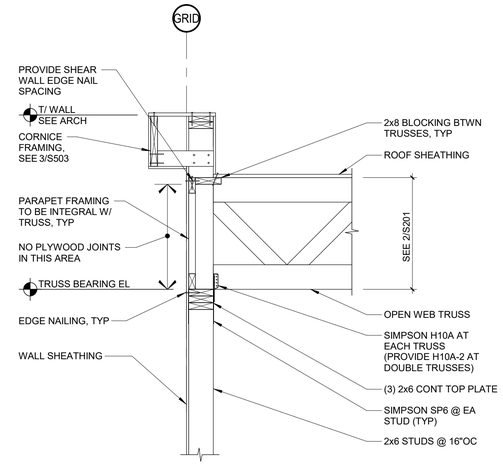

4 S503 TRUSS BEARING DETAIL
3/4" = 1'-0"

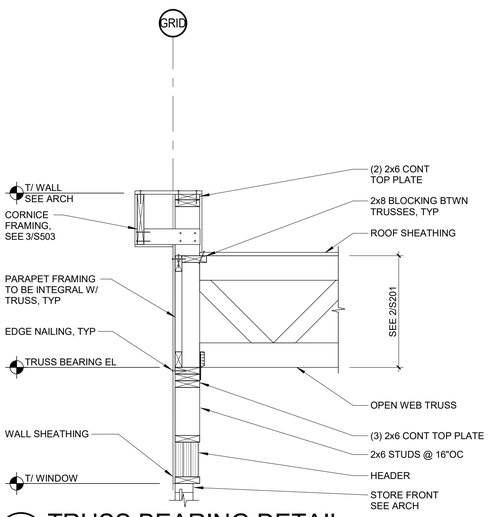

5 S503 TRUSS BEARING DETAIL
3/4" = 1'-0"

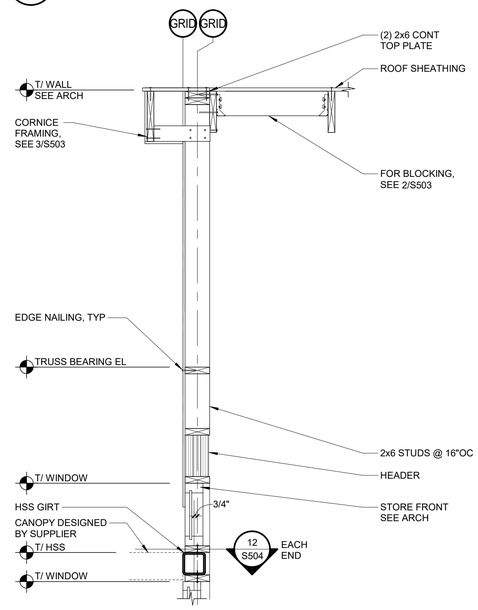

6 S503 JOIST BEARING DETAIL
3/4" = 1'-0"

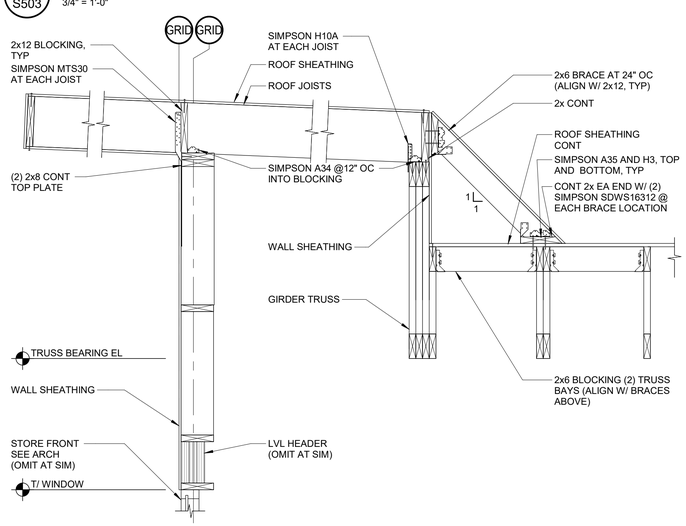

7 S503 TRUSS BEARING DETAIL
3/4" = 1'-0"

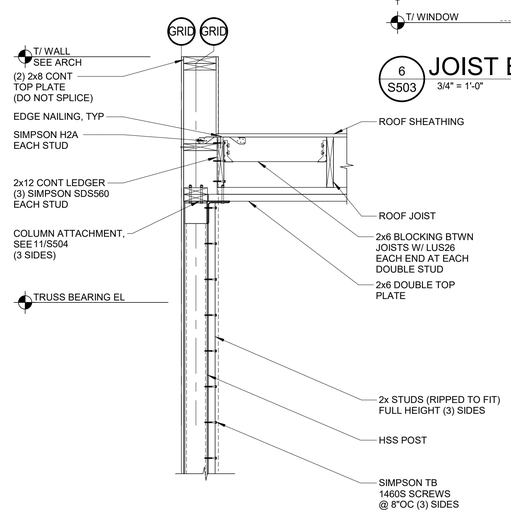

8 S503 JOIST BEARING DETAIL
3/4" = 1'-0"

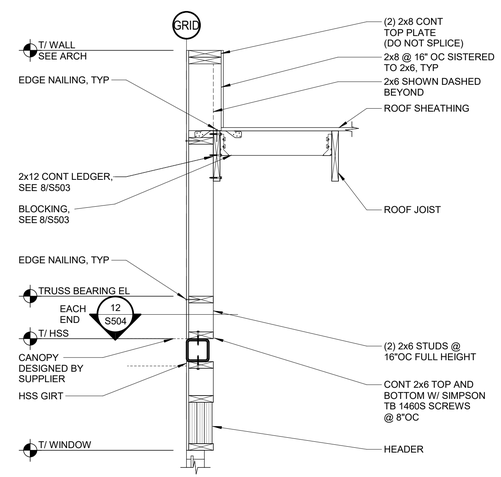

9 S503 JOIST BEARING DETAIL
3/4" = 1'-0"

© COPYRIGHT WILMUS ARCHITECTS

CONSULTANT

VAA, LLC
2300 Berkshire Lane N, Suite 200
Plymouth, MN 55441
783.559.9100
www.vaaeng.com
Project # 252795

CLIENT

Alliance DEVELOPMENT

FRED JACQUES
ALLIANCE DEVELOPMENT
230 OHIO ST, SUITE 200
OSHKOSH, WI 54902
(612) 313-0126

PROJECT INFORMATION

SOUTH LA CROSSE SHELL

MORMON COULEE RD & LOSEY BLVD S
LA CROSSE, WI 54601

SEAL

NOT FOR CONSTRUCTION

PROJECT NO.	252795
DRAWN BY	BES/MRP
CHECKED BY	MSN/TJM

ISSUE	DATE
PERMIT SET	01.09.2026

REVISION	DATE

TITLE:
ROOF FRAMING DETAILS

SHEET NUMBER
S503

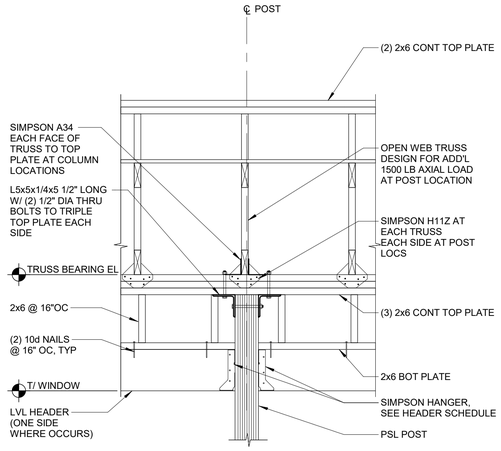

1 S504 **BEAM BEARING DETAIL**
3/4" = 1'-0"

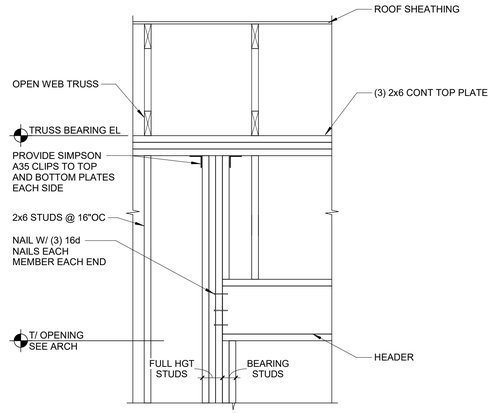

2 S504 **TYPICAL DROPPED HEADER**
3/4" = 1'-0"

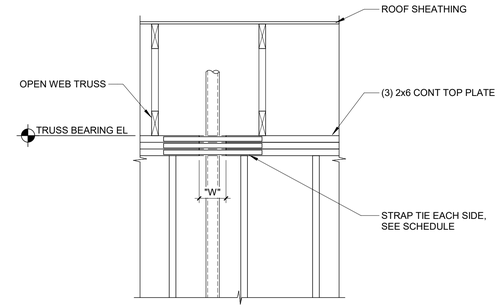

STRAP TIE SCHEDULE		
"W"	STRAP TIE	FASTENERS
≤ 5 1/2"	SIMPSON RPS22	(16) 16d
≤ 12"	SIMPSON RPS28	(16) 16d

3 S504 **STRAP TIE DETAIL AT NOTCHED PLATES**
NO SCALE

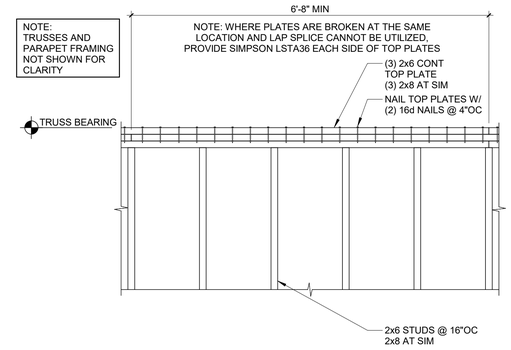

4 S504 **SHEAR WALL TOP PLATE SPLICE**
NO SCALE

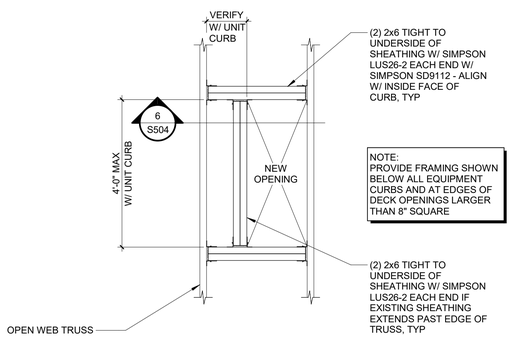

5 S504 **ROOF FRAME DETAIL**
3/4" = 1'-0"

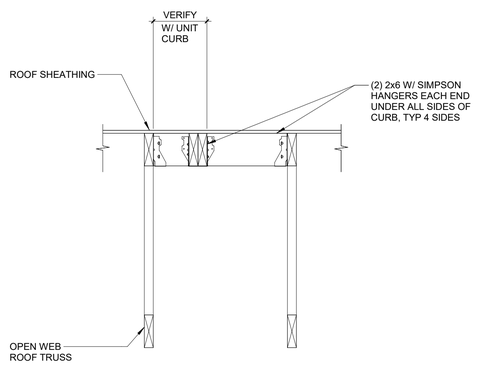

6 S504 **ROOF FRAME DETAIL**
1" = 1'-0"

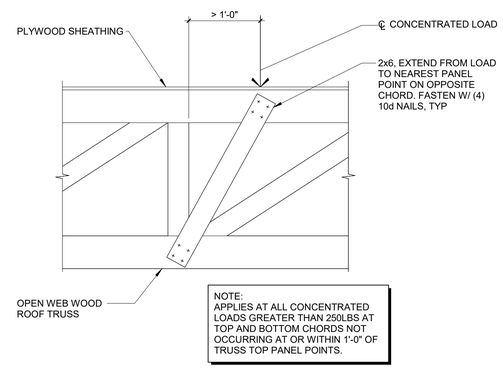

7 S504 **TRUSS CHORD REINFORCING DETAIL**
1" = 1'-0"

8 S504 **NOT USED**

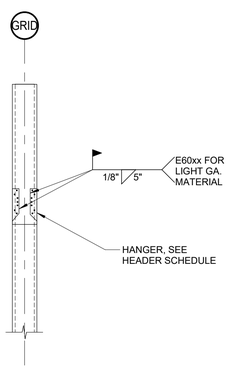

9 S504 **COLUMN CONNECTION DETAIL**
3/4" = 1'-0"

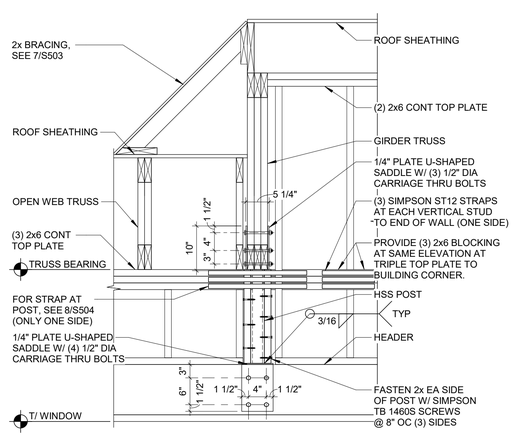

10 S504 **GIRDER BEARING DETAIL**
3/4" = 1'-0"

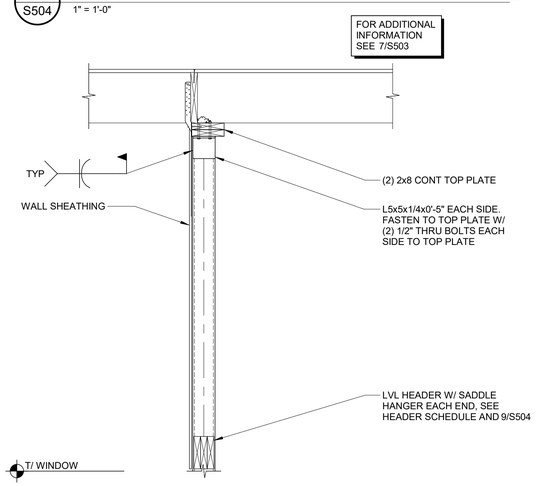

11 S504 **ROOF FRAMING DETAIL**
3/4" = 1'-0"

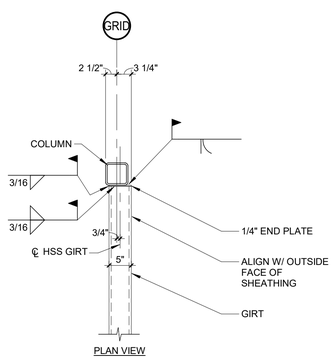

12 S504 **COLUMN CONNECTION DETAIL**
3/4" = 1'-0"

© COPYRIGHT WILKIS ARCHITECTS

CONSULTANT

VAA, LLC
2300 Berkshire Lane N, Suite 200
Plymouth, MN 55441
783.559.9100
www.vaaeng.com
Project # 252795

CLIENT

Alliance DEVELOPMENT

FRED JACQUES
ALLIANCE DEVELOPMENT
230 OHIO ST, SUITE 200
OSHKOSH, WI 54902
(612) 313-0126

PROJECT INFORMATION

SOUTH LA CROSSE SHELL
MORMON COULEE RD & LOSEY BLVD S
LA CROSSE, WI 54601

SEAL

NOT FOR CONSTRUCTION

PROJECT NO.	252795
DRAWN BY	BES/MRP
CHECKED BY	MSN/TJM

ISSUE	DATE
PERMIT SET	01.09.2026

REVISION	DATE

TITLE:
STRUCTURAL DETAILS

SHEET NUMBER:
S504

KEY NOTES:

1. ONE (1) LINE-VOLTAGE IN-GRADE JUNCTION BOX IN LANDSCAPING AREA AT REAR OF BUILDING (TO BE MINIMUM 12"X12"X8" WET-LISTED JUNCTION BOX) WITH TOP SET AT 1" ABOVE FINISHED GRADE AND LOCATED IN LANDSCAPE AREA.
2. REFER TO DETAIL 2 THIS SHEET FOR CONDUITS TO ANNOUNCE SIGN LOCATION AS SHOWN ON TENANT'S SITE PLAN. CONDUIT SHALL BE STUBBED 24" ABOVE GRADE AND CAPPED. SEE CIVIL DRAWINGS FOR EXACT LOCATION.
3. REFER TO DETAIL 2 THIS SHEET FOR CONDUITS TO CLEARANCE BAR LOCATION AS SHOWN ON TENANT'S SITE PLAN. CONDUIT SHALL BE STUBBED 24" ABOVE GRADE AND CAPPED. SEE CIVIL DRAWINGS FOR EXACT LOCATION.
4. REFER TO DETAIL 2 THIS SHEET FOR CONDUITS TO EACH SITE DIRECTIONAL SIGN AND/OR MONUMENT SIGN LOCATION AS SHOWN ON TENANT'S SITE PLAN. CONDUIT(S) SHALL BE STUBBED 24" ABOVE GRADE AND CAPPED. SEE CIVIL DRAWINGS FOR EXACT LOCATION.
5. ONE (1) LOW-VOLTAGE IN-GRADE JUNCTION BOX IN LANDSCAPING AREA AT REAR OF BUILDING (TO BE MINIMUM 12"X12"X8" WET-LISTED JUNCTION BOX) WITH TOP SET AT 1" ABOVE FINISHED GRADE AND LOCATED IN LANDSCAPE AREA.
6. REFER TO DETAIL 2 THIS SHEET FOR CONDUITS TO THE VEHICLE DETECTOR LOOP LOCATIONS AS SHOWN ON THE TENANT'S SITE PLAN.
7. SITE LIGHTING LOCATIONS, MAKE AND MODEL NUMBER TO BE COORDINATED WITH CIVIL PROVIDED PHOTOMETRIC PLAN. INCLUDE A COST IN BID FOR SITE LIGHTING.
8. APPROXIMATE LOCATION OF ELECTRICAL PANELS.
9. APPROXIMATE LOCATION OF NEW PATIO LIGHTING POLES.

GENERAL NOTES

A. WORK AND MATERIALS SHALL BE COMPLIANT WITH THE NEC AND REQUIREMENTS OF THE AHJ.
B. CONDUCTORS AND CONNECTIONS BELOW GRADE, EVEN WHERE WITHIN CONDUITS OR ENCLOSURES, SHALL BE SUITABLE FOR WET LOCATIONS.
C. PROVIDE PULL STRING IN EMPTY CONDUITS.
D. SEAL ENDS OF CONDUITS STUBBED UP ABOVE GRADE TO PROTECT FROM THE ELEMENTS.

TAG	DESCRIPTION	RESPONSIBILITY: DEVICE OR CONDUIT	RESPONSIBILITY: CONNECTION OR CONDUCTORS
1	VEHICLE DETECTOR LOOP - 6'x4' WITH 4 TURNS (EMX PR-46-XX). VERIFY LENGTH OF LEAD-IN WIRE PRIOR TO ORDERING TO ALLOW WIRE TO REACH VEHICLE DETECTOR WITHOUT SPLICING. SEE SITE PLAN FOR LOCATION(S).	GC	GC
2	1" CONDUIT FROM VEHICLE DETECTOR LOOP LOCATION TO LOW VOLTAGE J-BOX.	GC	GC
3	1" CONDUIT FROM ANNOUNCE SIGN LOCATION TO LINE VOLTAGE J-BOX. SEE SITE PLAN FOR LOCATION.	GC	GC
4	1" CONDUIT FROM CLEARANCE BAR LOCATION TO LINE VOLTAGE J-BOX. SEE SITE PLAN FOR LOCATION.	GC	N/A
5	1" CONDUIT FROM SITE DIRECTIONAL SIGNAGE AND/OR MONUMENT SIGN LOCATION(S) TO LINE VOLTAGE J-BOX. SEE SITE PLAN FOR LOCATIONS AND NUMBER OF ROUGH-IN LOCATIONS.	GC	GC
6	1" CONDUIT FROM SITE LIGHTING FIXTURE(S) TO LINE VOLTAGE J-BOX. SITE LIGHTING FIXTURES CAN BE DAISY-CHAINED.	GC	GC
7	LINE VOLTAGE J-BOX - MINIMUM 6"X6"X4" J-BOX ON INTERIOR WALL OF BUILDING AT 11'-0" AFF.	GC	GC
8	LOW VOLTAGE J-BOX - MINIMUM 6"X6"X4" J-BOX ON INTERIOR WALL OF BUILDING AT 11'-0" AFF.	GC	GC
9	1" SPARE CONDUIT FROM LOW VOLTAGE J-BOX TO LANDSCAPING AREA. SEAL CONDUIT FOR FUTURE USE.	GC	GC
10	1" SPARE CONDUIT FROM LINE VOLTAGE J-BOX TO LANDSCAPING AREA. SEAL CONDUIT FOR FUTURE USE.	GC	GC

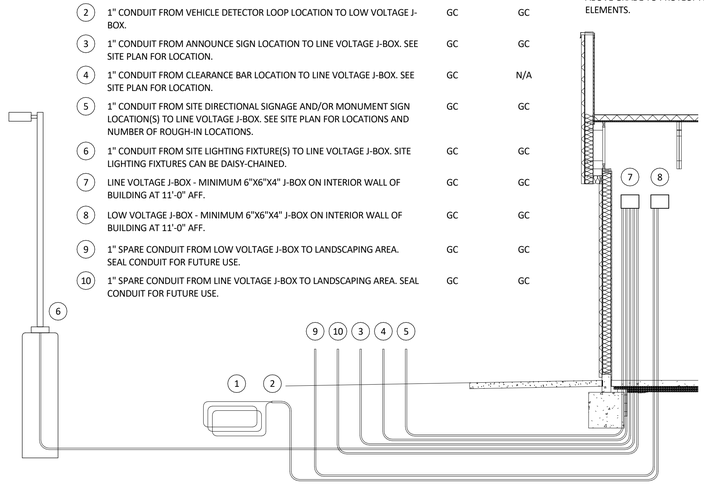

3 SITE CONDUIT DETAIL
1/4" = 1'-0"

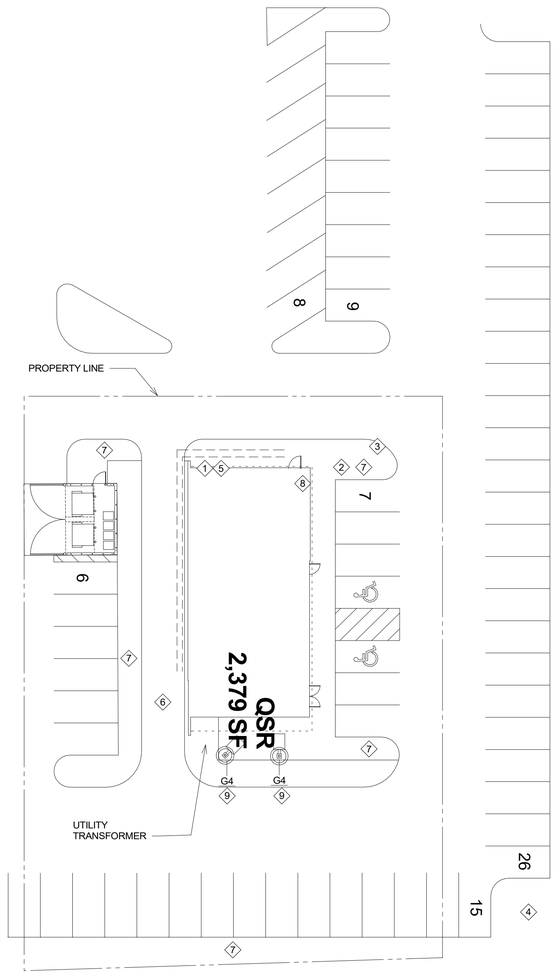

1 Electrical Site Plan
1" = 20'-0"

CONSULTANT:

DUNHAM

DUNHAM
50 South Sixth Street / Suite 1100
Minneapolis, Minnesota 55402-1540
PHONE 612.465.7550
FAX 612.465.7551
WEB dunhameng.com
mechanical + electrical
consulting engineering
Dunham Project No.: 0426995-132

CLIENT:

Alliance DEVELOPMENT

FRED JACQUES
ALLIANCE DEVELOPMENT
230 OHIO ST, SUITE 200
OSHKOSH, WI 54902
(612) 313-0126

PROJECT INFORMATION:

SOUTH LA CROSSE SHELL

MORMON COULEE RD & LOSEY BLVD S
LA CROSSE, WI 54601

NOT FOR CONSTRUCTION

01/09/2026

PROJECT NO.: 0425995-132
DRAWN BY: AZ
CHECKED BY: CM/RM

ISSUE:	DATE:
PERMIT SET	01/09/2026

REVISION:	DATE:

TITLE:
ELECTRICAL SITE PLAN

SHEET NUMBER:
E0

© COPYRIGHT WILKUS ARCHITECTS

LIGHT FIXTURE SCHEDULE

ELECTRICAL

FIXTURE LETTER	FIXTURE STYLE	VOLTAGE	MOUNTING	LAMPS TYPE	LAMPS COLOR	BALLAST/ DRIVER	FIXTURE MAX VA	CONTROL MEDIA (LENS, LOUVER, ETC.)	MANUFACTURER'S SERIES NUMBER	FIXTURE DESCRIPTION	NOTES
E2	EMERGENCY LIGHT REMOTE HEAD	120	RECESSED WALL/CEILING	LED	NA	NA	1 VA	GLARE FREE LENS	EXITRONIX MLED1-B-WP	BLACK FINISH, THERMOPLASTIC CONSTRUCTION, FULLY ADJUSTABLE SQUARE HEADS, MOUNTING PER FLOOR PLAN.	
E4	WHITE EXIT SIGN WITH EMERGENCY LIGHT - STANDARD RED LETTERS	120	VARIOUS	INTEGRAL LED	RED	N/A	2 VA	RED LETTERS	EXITRONIX CLED-U-WH	90 MINUTE BATTERY BACKUP WITH INTEGRAL EMERGENCY LIGHT, REMOTE HEAD CAPABLE	
G4	POLE MOUNTED AREA LIGHT - 1 HEAD	120	POLE	VERIFY	5000K	N/A	10 VA	TYPE II DISTRIBUTION	NLS LIGHTING - NV-1-T2-32L-7-50K-UNV	20' POLE ON 3' BASE	
X3	EXTERIOR WALL SCONCE	120	WALL	INTEGRAL LED	3000K	DIMMING 0-10V	2 VA	TBD	PERFORMANCE IN LIGHTING - ALU ROUND SIDE 4 (077305)	FOUR-WAY WALL SCONCE WITH ANODISED BLACK MATTE FINISH	
X6.1E-10	EXTERIOR BRONZE WALL PACK W/ 90 MINUTE BATTERY BACKUP	120	WALL	INTEGRAL LED	3000K	DIMMING 0-10V	10 VA	CLEAR TEMPERED GLASS, TYPE III DISTRIBUTION	RAB WPLEDS/E MOD1	SURFACE MOUNT TO RECESSED JUNCTION BOX. BRONZE FINISH. FIELD VERIFY FIXTURE IS FACTORY SET TO 10W, 3000K, AND PHOTOCELL OFF.	
X9	EXTERIOR LED CHANNEL LIGHT	120	SURFACE	FLEXSR-45-30-67-2 4	-	DIMMING 0-10V (10%)	45 VA	FLUSH, SNAP-IN SATIN LENS	PARADIGM LED AMC-2410-S W/ OPAL LENS AND END CAPS	FURNISHED W/ REMOTE-MOUNTED NEMA 3R LED DRIVER. SEE PLAN FOR LENGTHS.	

GENERAL ELECTRICAL NOTES:

A. REFER TO SPECIFICATION SECTIONS 265100 AND 265600 FOR LIGHT FIXTURE REQUIREMENTS.
B. BRING CONFLICTS BETWEEN THE MANUFACTURER'S CATALOG NUMBER AND DESCRIPTIONS TO THE ATTENTION OF THE ENGINEER.
C. LIGHT SOURCE SHALL HAVE COLOR TEMPERATURE 3500K WITH MINIMUM CRI OF 80 UNLESS OTHERWISE NOTED.
D. UNLESS A SPECIFIC CATALOG NUMBER OR SERIES IS NAMED, THE MANUFACTURER'S NAMED ALTERNATES MUST SUBMIT CATALOG CUT SHEETS AND IES FORMATTED PHOTOMETRIC REPORT TO THE ENGINEER FOR APPROVAL AT LEAST 10 DAYS PRIOR TO BID DATE. THE ENGINEER MAY REQUEST SAMPLE OF LUMINAIRE TO BE SUPPLIED.
E. MINIMUM LUMENS LISTED FOR LIGHT FIXTURES ARE DELIVERED LUMENS BASED ON PHOTOMETRIC TESTING COMPLETED IN ACCORDANCE WITH IES LM-79 STANDARDS.
F. SUBSTITUTE LIGHT FIXTURE IS SUBJECT TO ARCHITECT/ENGINEER APPROVAL.

NOTES:

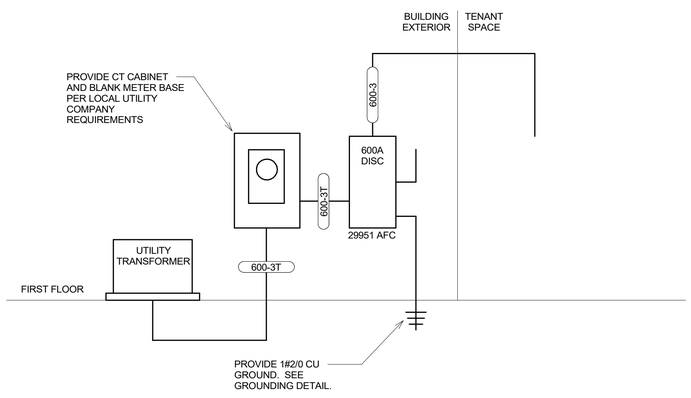

2 Riser
1/8" = 1'-0"

GENERAL NOTES:

A. ALL BASE BUILDING WIRING RUNNING THROUGH TENANT'S EXPOSED CEILING SHALL BE ENCASED IN EMT OR IMC CONDUIT, RUN TIGHT TO THE DEK AND EITHER BE PARALLEL OR PERPENDICULAR TO THE MAIN ENTRY STOREFRONT. THERE SHALL BE NO DIAGONAL RUNS OR AND ALL CONDUIT SHALL BE IN STRAIGHT LINES. THERE SHALL BE NO SURFACE MOUNTED CONDUIT ON WALLS.

KEY NOTES:

1. PROVIDE AND INSTALL A 600A, 120/208V, 3-PHASE, 4-WIRE METERED SERVICE. SERVICE SHALL HAVE A MAXIMUM VOLTAGE DROP FROM THE TRANSFORMER SECONDARY OF 2% TO THE MAIN DISCONNECT IN TENANT'S PANEL BOARD LOCATION.
2. PROVIDE A 2" CONDUIT WITH PULL STRING ROUTED FROM THE PROPERTY'S JOINT TELEPHONE POINT OF DEMARCATION TO A LOCATION WITH-IN THE LEASED PREMISES IN ACCORDANCE WITH THE TENANT'S PLANS.
3. PROVIDE A 2" CONDUIT WITH PULL STRING ROUTED FROM THE PROPERTY'S JOINT ISP POINT OF DEMARCATION TO A LOCATION WITH THE LEASED PREMISES IN ACCORDANCE WITH THE TENANT'S PLANS.
4. PROVIDE ONE 120V DUPLEX OUTLET TO BE LOCATED WITHIN 6 FEET OF THE DEMARC BLOCK LOCATION. IF DMARC IS INSTALLED ON THE EXTERIOR OF THE BUILDING, A WEATHERPROOF OUTLET AND COVER SHALL BE PROVIDED.
5. PROVIDE ELECTRICAL GROUNDING COMPONENTS FOR THE PHONE SYSTEM PER LOCAL CODES AND THE LOCAL EXCHANGE CARRIER'S REQUIREMENTS.
6. PROVIDE DUPLEX RECEPTACLE DEDICATED FOR IRRIGATION SYSTEM. PROVIDE CONTROL FOR IRRIGATION CONTROL THROUGH A TIME-CLOCK BASED CONTROLLER.
7. PROVIDE AND INSTALL TENANT SPECIFIED PICK UP SERVICE WINDOW WITH ALL CONNECTIONS, FULLY OPERATIONAL PER MANUFACTURER'S SPECIFICATIONS AND PER ALL NOTATIONS ON TENANT'S DESIGN/CONSTRUCTION DOCUMENTS, INCLUDEING BUT NOT LIMITED TO: ELECTRICAL CONNECTION, TRANSOMS AND SIDELIGHTS, BUMP OUT AND EXTERIOR SHELF, AIR CURTAIN/FLY FAN PER APPLICABLE LOCAL CODES AND TENANT'S DESIGN.
8. PROVIDE AND INSTALL ALL UNDERGROUND ELECTRICAL CONDUITS, LABELED WITH PULL STRINGS FROM ABOVE THE ELECTRICAL PANELS TO THE FOLLOWING EXTERIOR PICK-UP LANE EQUIPMENT AS NOTED ON THE TENANT'S DESIGN/CONSTRUCTION DOCUMENTS. SEE SITE PLAN FOR MORE INFORMATION.
9. FUTURE PANELS A AND B TO BE INSTALLED BY CHIPOTLE .

FEEDER SCHEDULE

XXXX

FEEDER	FEEDER DESCRIPTION
600-3	(2) 3"C, 4#350KCMIL + #1 G
600-3T	(2) 3"C, 4#350KCMIL

-2 SINGLE PHASE
-3 THREE PHASE

S SERVICE SECONDARY

GENERAL NOTES:

A. NOMENCLATURE DEFAULTS WITH A SINGLE NEUTRAL AND A GROUND.

NOTES:

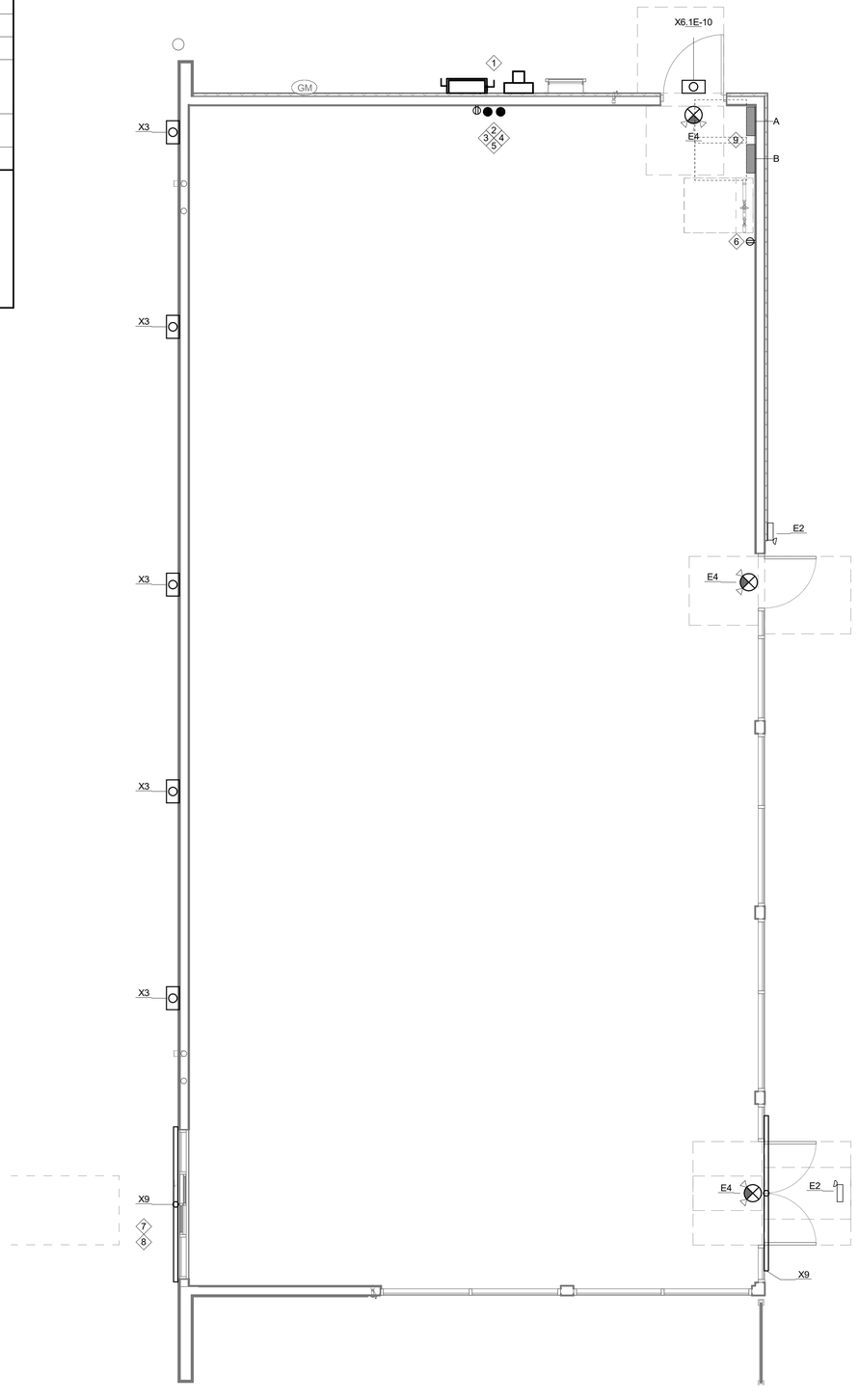

1 LIGHTING & POWER PLAN
1/4" = 1'-0"

© COPYRIGHT WILKES ARCHITECTS

CONSULTANT:

DUNHAM

DUNHAM
50 South Sixth Street / Suite 1100
Minneapolis, Minnesota 55402-1540
PHONE 612.465.7550
FAX 612.465.7551
WEB dunhameng.com
mechanical + electrical consulting engineering
Dunham Project No.: 0426995-132

CLIENT:

Alliance DEVELOPMENT

FRED JACQUES
ALLIANCE DEVELOPMENT
230 OHIO ST, SUITE 200
OSHKOSH, WI 54902
(612) 313-0126

PROJECT INFORMATION:

SOUTH LA CROSSE SHELL

MORMON COULEE RD & LOSEY BLVD S
LA CROSSE, WI 54601

NOT FOR CONSTRUCTION

01/09/2026

PROJECT NO.: 0425995-132
DRAWN BY: AZ
CHECKED BY: CM/RM

ISSUE:	DATE:
PERMIT SET	01/09/2026

REVISION:	DATE:

TITLE:
LIGHTING & POWER PLAN

SHEET NUMBER:
E1

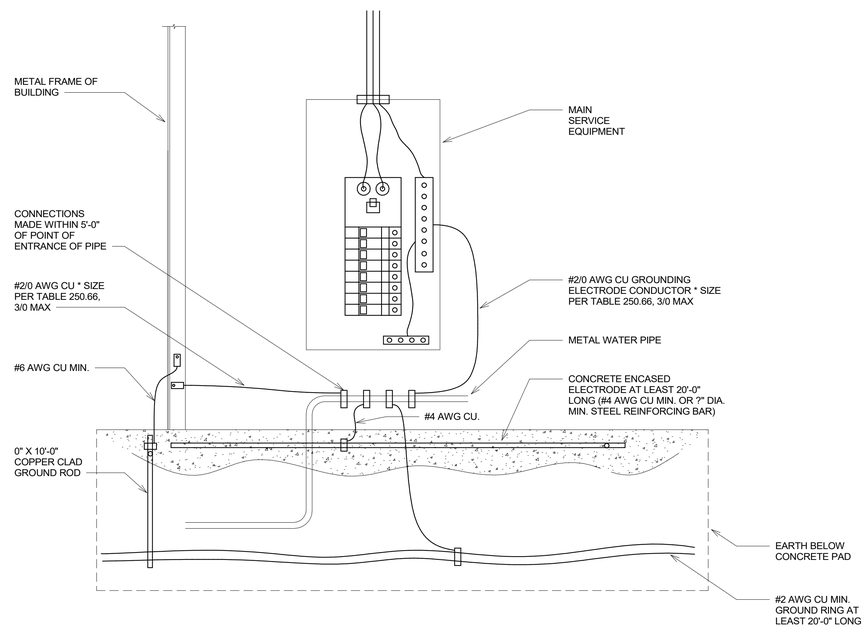

1 GROUNDING DETAIL
12" = 1'-0"

© COPYRIGHT WILKUS ARCHITECTS

CONSULTANT:

DUNHAM

DUNHAM
50 South Sixth Street / Suite 1100
Minneapolis, Minnesota 55402-1540
PHONE 612.465.7550
FAX 612.465.7551
WEB dunhameng.com
mechanical + electrical
consulting engineering
Dunham Project No.: 0426995-132

CLIENT:

Alliance DEVELOPMENT

FRED JACQUES
ALLIANCE DEVELOPMENT
230 OHIO ST, SUITE 200
OSHKOSH, WI 54902
(612) 313-0126

PROJECT INFORMATION:

SOUTH LA CROSSE SHELL

MORMON COULEE RD & LOSEY BLVD S
LA CROSSE, WI 54601

NOT FOR CONSTRUCTION

01/09/2026

PROJECT NO.: 0425995-132
DRAWN BY: AZ
CHECKED BY: CM/RM

ISSUE:	DATE:
PERMIT SET	01/09/2026

REVISION:	DATE:

TITLE:
PANEL SCHEDULE AND DETAIL

SHEET NUMBER:
E2

DIVISION 16

ELECTRICAL SPECIFICATIONS

PART 1 - GENERAL

1.01 GENERAL CONDITIONS

A. THE GENERAL, SPECIAL, AND OTHER CONDITIONS OF THE ARCHITECTURAL DOCUMENTS SHALL BE CONSIDERED AN INTEGRAL PART OF THESE ELECTRICAL SPECIFICATIONS.

B. REFERENCE TO "CONTRACTOR" IN THIS SPECIFICATION SHALL MEAN "ELECTRICAL CONTRACTOR", UNLESS OTHERWISE NOTED.

1.02 DRAWINGS AND DOCUMENTS

A. THE ELECTRICAL DRAWINGS AND SPECIFICATIONS SHALL FORM A SET OF PLANS FOR THE ELECTRICAL WORK. NEITHER THE DRAWINGS NOR THE SPECIFICATIONS SHALL BE COMPLETE WITHOUT THE OTHER. ANY ITEM SHOWN ON THE DRAWINGS OR SPECIFIED IN THE SPECIFICATIONS SHALL BE CONSIDERED AS SHOWN AND SPECIFIED ON BOTH.

B. ANY QUESTIONS REGARDING THE INTENT OF THE DRAWINGS OR SPECIFICATIONS SHALL BE BROUGHT TO THE ENGINEER'S ATTENTION AS SOON AS POSSIBLE. IF DIRECTION FROM THE ENGINEER CANNOT BE OBTAINED DUE TO TIME OR COMMUNICATION LIMITATIONS, THE GREATER QUANTITY, HIGHER QUALITY OR CONDITION MOST FAVORABLE TO THE OWNER SHALL BE ASSUMED. CONTRACTOR SHALL PROVIDE ALL LABOR, MATERIALS, EQUIPMENT, AND MISCELLANEOUS ITEMS NECESSARY FOR A COMPLETE AND OPERATIONAL ELECTRICAL INSTALLATION, AS SHOWN ON THE DRAWINGS AND CALLED FOR IN THESE SPECIFICATIONS.

C. CONTRACTOR SHALL FAMILIARIZE THEMSELVES WITH ARCHITECTURAL, STRUCTURAL AND MECHANICAL DRAWINGS AND SPECIFICATIONS. COORDINATE ALL SHAFTS, CHASES, FURRED SPACES, SUSPENDED CEILINGS, LOCATIONS OF EQUIPMENT, ETC.

D. ELECTRICAL CONTRACTOR SHALL COORDINATE ROUTING OF ALL CONDUIT AND WIRE WITHIN SOFFITS PROVIDED BY THE GENERAL CONTRACTOR. THE ELECTRICAL CONTRACTOR SHALL PROVIDE ALL SOFFITING REQUIRED TO COVER INSTALLATIONS NOT COORDINATED OR SPECIFICALLY APPROVED BY THE ARCHITECT AND ENGINEER.

E. ELECTRICAL DRAWINGS ARE DIAGRAMMATIC AND ARE INTENDED TO SHOW APPROXIMATE LOCATION ONLY. PLACEMENT OF ELECTRICAL EQUIPMENT AND DEVICES SHALL NOT INTERFERE WITH LOCATIONS OR CLEARANCES OF OTHER TRADES' MATERIALS OR EQUIPMENT.

F. DIMENSIONS GIVEN ON THE DRAWINGS SHALL TAKE PRECEDENCE OVER SCALED DIMENSIONS. DIMENSIONS, WHETHER GIVEN IN FIGURES OR SCALED, SHALL BE VERIFIED IN THE FIELD.

G. CONTRACTOR SHALL VERIFY THAT THE EQUIPMENT TO BE FURNISHED UNDER CONTRACT WILL FIT WITHIN THE AVAILABLE SPACE.

H. NOTIFY THE ARCHITECT AND ENGINEER OF ANY DISCREPANCIES BETWEEN ELECTRICAL, ARCHITECTURAL AND MECHANICAL DRAWINGS.

I. VERIFY ITEMS SUCH AS DOOR SWINGS, WINDOW LOCATIONS, CASEWORK, ETC., BEFORE INSTALLING ANY ELECTRICAL EQUIPMENT OR DEVICES. ALL DEVICES CONFLICTING WITH AND OTHER TRADES WORK DUE TO LACK OF COORDINATION SHALL BE RELOCATED AT NO ADDITIONAL COST TO THE OWNER.

1.03 SCOPE OF WORK

A. THE CONTRACTOR SHALL FURNISH ALL LABOR, MATERIALS, EQUIPMENT, TOOLS, AND OTHER ITEMS NECESSARY FOR OR INCIDENTAL TO INSTALLATION OF A COMPLETE ELECTRICAL SYSTEM AS REQUIRED FOR THIS PROJECT.

1.04 CODES, INSPECTIONS, AND FEES

A. THE COMPLETED ELECTRICAL INSTALLATION SHALL COMPLY WITH THE LATEST EDITION OF THE NATIONAL ELECTRICAL CODE AS WELL AS ALL APPLICABLE FEDERAL, STATE, AND LOCAL CODES, REGULATIONS, AND STANDARDS, INCLUDING INTERPRETATIONS OF THESE BY APPROPRIATE AUTHORITIES HAVING JURISDICTION. WHERE THE DRAWINGS AND SPECIFICATIONS CALL FOR WORKMANSHIP OR MATERIALS IN EXCESS OF CODE OR REGULATORY REQUIREMENTS, THE DRAWINGS AND SPECIFICATIONS SHALL GOVERN.

B. THE WORK SPECIFIED HEREIN SHALL BE SUBJECT TO INSPECTION AND APPROVAL BY AUTHORIZED REPRESENTATIVES OF THE NATIONAL BOARD OF FIRE UNDERWRITERS, STATE AND LOCAL AUTHORITIES HAVING JURISDICTION, AND THE ENGINEER. THE CONTRACTOR SHALL MAKE THE NECESSARY ARRANGEMENTS TO HAVE THE ELECTRICAL WORK INSPECTED BY APPROPRIATE INSPECTOR(S) AND SHALL PROVIDE TWO (2) COPIES OF EVERY FINAL SIGNED "CERTIFICATE OF INSPECTION" TO THE OWNER.

C. THE CONTRACTOR SHALL OBTAIN AND PAY FOR ALL LICENSES AND PERMITS, PAY ALL FEES AND CHARGES FOR ALL WORK INSTALLED BY THE CONTRACTOR. AND PAY ALL FEES AND CHARGES LEVIED BY THE ELECTRIC UTILITY COMPANY FOR CONNECTION TO ELECTRIC SERVICES.

1.05 INSPECTION OF SITE

A. DIVISION 16 CONTRACTOR SHALL VISIT SITE PRIOR TO BID AND FAMILIARIZE HIMSELF WITH ALL EXISTING CONDITIONS IN REGARDS TO THE REQUIREMENTS OF THIS CONTRACT. ANY VISIBLE OR EASILY ATTAINABLE INFORMATION AVAILABLE AT THE SITE, EVEN IF DIFFERING FROM THESE DOCUMENTS, WILL NOT RESULT IN EXTRA COMPENSATION AFTER TIME OF BID. ANY DISCREPENCIES FROM THESE DOCUMENTS, SHOULD BE REPORTED TO THE ARCHITECT/ENGINEER AS SOON AS POSSIBLE.

1.06 TEMPORARY ELECTRICAL SERVICE

A. THE CONTRACTOR SHALL PROVIDE AND MAINTAIN A TEMPORARY LIGHTING AND POWER SYSTEM AT A LOCATION SPECIFIED BY THE GENERAL CONTRACTOR. THE SERVICE SHALL BE 200-AMP, 120/240-VOLT, SINGLE-PHASE, 3-WIRE, WITH APPROPRIATE METERING AND PROTECTIVE EQUIPMENT. COMPONENTS OF THE TEMPORARY SYSTEM SHALL BE AS REQUIRED BY THE GENERAL CONTRACTOR. THE SYSTEM SHALL COMPLY WITH ALL APPLICABLE CODES AND REGULATIONS. THE CONTRACTOR SHALL REMOVE THE TEMPORARY SYSTEM WHEN IT IS NO LONGER NEEDED.

1.07 MATERIALS AND EQUIPMENT

A. UNLESS OTHERWISE SPECIFIED, ALL MATERIAL AND EQUIPMENT SHALL BE NEW AND MANUFACTURED BY RECOGNIZED MANUFACTURERS. ALL MATERIALS AND EQUIPMENT SHALL MEET THE REQUIREMENTS OF GOVERNING CODES.

B. ALL MATERIAL AND EQUIPMENT SHALL BE LISTED AND LABELED BY UNDERWRITERS LABORATORIES, INC. (UL), AS CONFORMING TO ITS STANDARDS IN EVERY CASE WHERE SUCH A STANDARD HAS BEEN ESTABLISHED FOR THAT TYPE OF MATERIAL OR EQUIPMENT.

C. THE CONTRACTOR SHALL OBTAIN WRITTEN APPROVAL TO USE ANY PROPOSED SUBSTITUTE MATERIAL OR EQUIPMENT BEFORE CONTRACTING TO PURCHASE SUCH SUBSTITUTES. THE OWNER RESERVES THE RIGHT TO REQUIRE THE REMOVAL OF ANY MATERIAL OR EQUIPMENT WHICH DOES NOT HAVE THIS WRITTEN APPROVAL AND WHICH DOES NOT COMPLY WITH THE SPECIFICATIONS, REGARDLESS OF THE STATE OF INSTALLATION OF SUCH EQUIPMENT.

D. WHERE EQUIPMENT SUPPLIED BY THE CONTRACTOR HAS CHARACTERISTICS OTHER THAN AS SPECIFIED HEREIN, THE CONTRACTOR SHALL, AT NO ADDITIONAL COST TO THE OWNER, MAKE ALL CHANGES IN THE ELECTRICAL WORK NECESSITATED BY THE SUBSTITUTION.

1.08 WORKMANSHIP

A. THE INSTALLATION SPECIFIED HEREIN SHALL BE PERFORMED IN A NEAT AND WORKMANLIKE MANNER BY PERSONS EXPERIENCED AND SKILLED IN THE TRADE. ONLY THE BEST QUALITY WORKMANSHIP WILL BE ACCEPTED. ALL EXPOSED COMPONENTS OF THE ELECTRICAL SYSTEMS SHALL BE SQUARE AND TRUE WITH BUILDING LINES AND SURFACES.

1.09 CORRELATION OF WORK

A. THE CONTRACTOR SHALL GIVE CAREFUL CONSIDERATION TO THE WORK OF THE GENERAL, MECHANICAL, AND ALL OTHER CONTRACTORS AND SUBCONTRACTORS ON THE PROJECT AND SHALL ORGANIZE THE ELECTRICAL WORK SO THAT IT WILL NOT INTERFERE WITH THE WORK OF OTHER TRADES.

B. DRAWINGS AND SPECIFICATIONS FOR OTHER TRADES AND GENERAL CONSTRUCTION DRAWINGS SHALL BE CONSULTED FOR CORRELATION INFORMATION, DETAILS, DIMENSIONS, ETC.

C. THE LOCATION OF ALL OUTLETS, WIRING, AND EQUIPMENT SHALL BE VERIFIED.

D. NO ADDITIONAL COMPENSATION WILL BE ALLOWED FOR MOVING MISPLACED ELECTRICAL SYSTEM COMPONENTS.

1.10 SHOP DRAWINGS

A. THE CONTRACTOR SHALL SUBMIT SHOP DRAWINGS TO THE ENGINEER FOR ALL MAJOR ITEMS OF ELECTRICAL EQUIPMENT. SIX (6) SETS OF SHOP DRAWINGS SHALL BE SUBMITTED FOR REVIEW. THE DRAWINGS SHALL BE REVIEWED AND APPROVED, CONDITIONALLY APPROVED, OR DISAPPROVED BY THE ENGINEER. TWO (2) SETS OF THE REVIEWED DRAWINGS WILL BE RETAINED BY THE ENGINEER. THE REMAINDER WILL BE RETURNED TO THE CONTRACTOR. IN THE CASE OF DISAPPROVAL, THE CONTRACTOR SHALL SUBMIT NEW DRAWINGS, CORRECTED AS REQUIRED BY THE ENGINEER. ALL SHOP DRAWING SUBMITTALS SHALL ALLOW FOR A MINIMUM OF 7 WORKING DAYS FOR ENGINEER REVIEW.

B. SHOP DRAWINGS SHALL BE DETAILED DIMENSIONED MANUFACTURERS' DRAWINGS, INCLUDING SCHEMATIC DRAWINGS WHERE APPLICABLE. DRAWINGS SHALL BE LEGIBLE, USE STANDARD ELECTRICAL NOTATIONS, AND BE PREPARED IN A PROFESSIONAL MANNER. HANDWRITTEN SCHEDULES SHALL NOT BE SUBMITTED. EACH SET OF DOCUMENTS SHALL BE BOUND IN A BINDER WITH A TITLE PAGE AND AN INDEX PAGE. THE TITLE PAGE SHALL LIST THE PROJECT NAME AND ADDRESS, AND CONTRACTOR'S NAME, ADDRESS, AND TELEPHONE NUMBER. THE INDEX PAGE SHALL LIST THE ITEMS IN THE BINDER WITH, WHERE APPLICABLE, REFERENCES TO TYPE DESIGNATIONS OR OTHER IDENTIFIERS NOTED ON DRAWINGS OR DRAWING SCHEDULES. A 3"X3" CLEAR SPACE SHALL BE PROVIDED ON THE TITLE OR INDEX PAGE FOR THE ENGINEER'S STAMP. WHERE SPACE PERMITS, TITLE AND INDEX PAGES MAY BE COMBINED.

D. THE CONTRACTOR SHALL ASSURE THAT SHOP DRAWINGS ARE COMPLETE BEFORE SUBMITTAL. SUBMITTAL TO THE ENGINEER SHALL BE VIA THE GENERAL CONTRACTOR AND, WHERE REQUIRED, THE ARCHITECT. SHOP DRAWINGS NOT SIGNED BY BOTH THE CONTRACTOR AND THE GENERAL CONTRACTOR SHALL BE RETURNED.

E. THE CONTRACTOR SHALL PROVIDE A LIST FOR ANY ITEM SUBMITTED IN THE SHOP DRAWINGS WHICH IS BEING SUBSTITUTED FOR, ADDED TO, OR DELETED FROM MATERIAL SPECIFIED IN THE SPECIFICATIONS. THE LIST SHALL IDENTIFY THE PROPOSED ITEM, THE SPECIFIED ITEM, DIFFERENCES BETWEEN THE TWO, WHETHER THE ITEM IS NEEDED TO COMPLETE A SYSTEM, AND OTHER RELEVANT COMMENTS TO JUSTIFY AN ADDITION, DELETION, OR SUBSTITUTION. THE LIST SHALL BE BEHIND THE TITLE PAGE OF THE SHOP DRAWING SUBMITTAL. IF THE CONTRACTOR USES MATERIALS OTHER THAN THOSE SPECIFIED AND FAILS TO CALL ATTENTION TO THE DIFFERENCES BETWEEN THESE MATERIALS AND THOSE SPECIFIED, THE CONTRACTOR SHALL BE RESPONSIBLE FOR REPLACEMENT, AT NO ADDITIONAL COST TO THE OWNER, OF ANY SUCH MATERIALS DETERMINED BY THE ENGINEER TO BE UNACCEPTABLE.

F. GENERAL DESIGN AND LAYOUT IS THE ONLY APPROVAL IMPLIED BY THE ENGINEER'S SHOP DRAWING APPROVAL STAMP. CONTRACT DOCUMENT REQUIREMENTS NOT NOTED IN THE SHOP DRAWINGS REMAIN REQUIREMENTS OF THE CONTRACT. THE APPROVAL STAMP ON THE SHOP DRAWINGS DOES NOT RELIEVE THE CONTRACTOR OR THE SUPPLIER OF RESPONSIBILITY FOR FULL CONTRACT COMPLIANCE.

1.11 MAINTENANCE MANUAL

A. THE CONTRACTOR SHALL FURNISH THE OWNER WITH TWO (2) COPIES OF A MANUAL COVERING THE OPERATION AND MAINTENANCE OF ALL EQUIPMENT PROVIDED UNDER THIS CONTRACT. THE MANUALS SHALL BE 3-RING, LOOSE LEAF, HEAVY DUTY, STEEL PIANO HINGED NOTEBOOKS, HYTONE #8711 OR EQUAL, AND SUBMITTED TO THE ARCHITECT/ENGINEER FOR APPROVAL. EACH MANUAL SHALL CONTAIN THE FOLLOWING:

1. COMPLETE MANUFACTURER CATALOG DATA, MANUFACTURER'S LITERATURE, WIRING DIAGRAMS, DETAILED OPERATING INSTRUCTIONS, AND A COMPLETE LISTING OF SUPPLIERS AND DISTRIBUTORS WHERE REPLACEMENT PARTS AND MAINTENANCE SERVICES ARE AVAILABLE FOR ALL EQUIPMENT.
2. INSPECTION CERTIFICATES, SIGNED BY THE APPROPRIATE INSPECTOR, SHALL BE FURNISHED IN THE MAINTENANCE MANUAL.
3. AS WORK PROGRESSES, THE CONTRACTOR SHALL MARK A SET OF CONSTRUCTION DOCUMENTS TO SHOW ACTUAL CIRCUIT ROUTING AND MAKEUP, EQUIPMENT LOCATION CHANGES, AND ANY OTHER CHANGES OR DEVIATIONS BETWEEN PROJECT WORK, AS BUILT, AND THE CONTRACT DOCUMENTS. MARKINGS SHALL BE NEAT, LEGIBLE, AND PERMANENT. UPON COMPLETION OF THE WORK, THE CONTRACTOR SHALL SIMILARLY MARK A SECOND SET OF DOCUMENTS AND PROVIDE BOTH SETS OF AS-BUILT DOCUMENTS TO THE OWNER WITH THE MAINTENANCE MANUALS.

1.12 GUARANTEE

A. THE CONTRACTOR SHALL FURNISH THE OWNER WITH A WRITTEN GUARANTEE FOR THE PERIOD OF ONE (1) YEAR AGAINST THE FAILURE OF ANY PART OF THE ELECTRICAL SYSTEMS INSTALLED UNDER THE SPECIFICATIONS DUE TO FAULTY MATERIAL OR WORKMANSHIP. GUARANTEE PERIOD SHALL START UPON SUBSTANTIAL COMPLETION OR AS SPECIFIED UNDER GENERAL AND SPECIAL CONDITIONS. LAMP BULBS SHALL BE OPERABLE ON THE START DATE OF, BUT EXCLUDED FROM, THE GUARANTEE.

B. THE CONTRACTOR SHALL ASSURE THAT ANY EXTENDED WARRANTIES TO WHICH THE OWNER IS ELIGIBLE ARE PASSED ON TO THE OWNER.

1.13 CUTTING AND PATCHING

A. THE CONTRACTOR SHALL PERFORM ALL CUTTING AND PATCHING NECESSARY FOR THE COMPLETION OF THE ELECTRICAL WORK FOR THIS PROJECT. NO STRUCTURAL MEMBERS SHALL BE DISTURBED WITHOUT OBTAINING WRITTEN PERMISSION OF THE ENGINEER.

B. ANY SURFACE WHICH IS DISTURBED IN ANY WAY BY THE CONTRACTOR SHALL BE REPAIRED AND REFINISHED TO PROVIDE A SURFACE EQUAL IN STRENGTH, DURABILITY, AND APPEARANCE TO THE ORIGINAL SURFACE.

C. WHERE IT IS NECESSARY TO DRILL OR CUT CONCRETE SURFACES, THE EDGES SHALL BE SHARPLY DEFINED. HOLES SHALL BE MADE WITH A ROTARY DRILL. CUTS SHALL BE MADE WITH A CONCRETE SAW UNLESS SOME OTHER METHOD OF MAKING SPECIFIC CUTS IS APPROVED BY THE ENGINEER.

D. PENETRATIONS THROUGH SMOKE, FIRE, HAZARDOUS AREA, OR OTHER RATED SEPARATIONS SHALL BE SEALED TO PRESERVE THE RATINGS OF THE SEPARATIONS.

E. ALL CUTTING, DRILLING, PATCHING, REPAIRING, AND REFINISHING SHALL BE DONE BY PERSONS SKILLED IN APPROPRIATE TRADES.

F. THE CONTRACTOR SHALL CLEAN AWAY ALL RUBBISH AND LITTER GENERATED DURING ELECTRICAL INSTALLATION.

1.14 DEMOLITION

A. WHERE ELECTRICAL WORK TO REMAIN IS DAMAGED OR DISTURBED IN THE COURSE OF THE WORK, REMOVE DAMAGED PORTIONS AND INSTALL NEW PRODUCTS OF EQUAL CAPACITY, QUALITY, AND FUNCTIONALITY.

B. ACCESSIBLE WORK INDICATED TO BE DEMOLISHED: REMOVE EXPOSED ELECTRICAL INSTALLATION IN ITS ENTIRETY.

C. ABANDONED WORK: CUT AND REMOVE BURIED RACEWAY AND WIRING INDICATED TO BE ABANDONED IN PLACE, 2 INCHES BELOW THE SURFACE OF ADJACENT CONSTRUCTION. CAP AND PATCH SURFACE TO MATCH EXISTING FINISH.

D. REMOVAL: REMOVE DEMOLISHED MATERIAL FROM THE PROJECT SITE.

E. TEMPORARY DISCONNECTION: REMOVE, STORE, CLEAN, REINSTALL, RECONNECT, AND MAKE OPERATIONAL COMPONENTS INDICATED FOR RELOCATION.

1.15 GENERAL RACEWAY REQUIREMENTS

A. PROHIBITED ITEMS:

1. ALUMINUM FLEXIBLE CONDUIT AND NONMETALLIC RACEWAYS ARE PROHIBITED FOR USE INSIDE OF BUILDING UNLESS SPECIFICALLY PERMITTED ELSEWHERE IN THIS STANDARD.
2. EB PVC CONDUIT OR SIMILAR NON-METALLIC CONDUITS WITH WALLS THINNER THAN SCHEDULE 40.
3. THINWALL INDENTER, SET SCREW DIE-CAST OR SLIP-ON METALLIC FITTINGS.
4. DO NOT INSTALL CONDUIT LATERALLY WITHIN SLABS ON GRADE OR UPPER FLOOR SLABS, EXCEPT SAW CUTTING EXISTING SLABS OR AS APPROVED BY MAC ELECTRICAL STAFF.
5. METAL CLAD (MC) CABLE IS NOT ALLOWED EXCEPT FOR LIGHT FIXTURE WHIPS. IF MC CABLE IS USED, IT SHALL HAVE A FULL SIZE INSULATED EQUIPMENT GROUND.
6. BX CABLE IS NOT ALLOWED ANYWHERE.

B. GENERAL

1. STEEL FLEXIBLE CONDUIT: LIMIT THE USE OF FLEXIBLE CONDUIT TO BE STEEL AND FOR RECESSED LIGHT FIXTURES, MOTORS AND EQUIPMENT. MINIMIZE FLEXIBLE CONDUIT LENGTHS TO A MAXIMUM OF 72" LENGTHS EXCEPT WHERE REQUIRED TO BE FISHED IN EXISTING WALLS, CABINETRY, TICKET COUNTERS OR WHERE EMT IS NOT WORKABLE. PROVIDE INTERNAL COPPER GROUNDING CONDUCTOR WITHIN FLEXIBLE CONDUITS.
   A. MAXIMUM FLEXIBLE CONDUIT LENGTH ALLOWABLE IS 72". EXCESS CONDUIT SHALL NOT BE COILED UP OR HANGING LOOSE.
2. RIGID METALLIC CONDUIT
   A. COLORED CONDUIT SHALL HAVE DYE-INFUSED COLORING (NOT PAINTED OR POWDER COATED) AND SHALL BE UTILIZED FOR THE SYSTEMS BELOW WITH THE COLOR INDICATED. COLORED CONDUIT SHALL ONLY BE USED FOR THE SYSTEM INDICATED. IN AREAS WHERE COLORED CONDUIT IS EMPTIED DUE TO DEMOLITION/REMODEL, IT SHALL ONLY BE REUSED FOR THE SYSTEM INDICATED. FIRE ALARM - RED, TEMPERATURE CONTROL - BLUE.
   B. STEEL ELBOWS ARE TO BE USED WITH NONMETALLIC CONDUITS SIZES 1" AND LARGER INSTALLED BELOW GRADE. ELBOWS IN BURIED PVC CONDUIT RUNS SHALL BE PVC COATED STEEL.
   C. USE NON-METALLIC CONDUIT BENDING EQUIPMENT AS RECOMMENDED BY THE MANUFACTURER, DO NOT USE BLOW TORCHES.
3. EMPTY CONDUIT: PROVIDE NYLON PULL CORDS IN EMPTY CONDUITS INTENDED FOR FUTURE.
4. METAL CONDUIT FITTINGS: PROVIDE FITTINGS MADE OF GALVANIZED STEEL OR MALLEABLE IRON. ALUMINUM FITTINGS AND CONNECTORS SHALL NOT BE USED.
5. SURFACE RACEWAY SYSTEM: PROVIDE A SEPARATE GROUNDING CONDUCTOR, INTEGRALLY CONNECTED TO ALL DEVICES, THE RACEWAY AND THE BUILDING GROUND SYSTEM IN SURFACE RACEWAY SYSTEMS.

A. ELECTRICAL CONDUCTORS INSTALLED UNDER THESE SPECIFICATIONS SHALL BE IN ELECTRICAL RACEWAY. ALL RACEWAYS SHALL BE INSTALLED IN ACCORDANCE WITH THESE GENERAL REQUIREMENTS.

B. RACEWAY SHALL BE COMPLETE WITH NECESSARY COUPLINGS, CONNECTORS, BOXES, SUPPORTS, FITTINGS, AND ALL OTHER COMPONENTS NEEDED FOR A COMPLETE AND INTEGRAL RACEWAY SYSTEM. SYSTEM COMPONENTS SHALL BE DESIGNED FOR INTERCONNECTION AND SHALL BE INSTALLED TO PROVIDE A NEAT APPEARING, MECHANICALLY FIRM ASSEMBLY ADHERING TO CODES AND PRINCIPLES OF GOOD ELECTRICAL PRACTICE, AND CONFORMING WITH RECOMMENDATIONS OF THE RACEWAY AND CONDUCTOR MANUFACTURERS.

C. RACEWAY RUNS SHALL ORIGINATE AND TERMINATE AT LOCATIONS APPROXIMATELY AS SHOWN ON THE DRAWINGS. RUNS SHALL BE STRAIGHT AND TRUE WITH ELBOWS, OFFSETS AND BENDS, UNIFORM AND SYMMETRICAL. IN GENERAL, EXPOSED RUNS OF RACEWAY SHALL BE PARALLEL OR PERPENDICULAR TO SURROUNDING BUILDING LINES AND SURFACES. RUNS SHALL BE INSTALLED SO THAT THEY DO NOT INTERFERE WITH AISLES, PASSAGEWAYS, DOORWAYS, HATCHWAYS, WORKING AREAS, AND FLOORS.

D. SUFFICIENT PULL AND JUNCTION BOXES OF ADEQUATE SIZE SHALL BE LOCATED AS NECESSARY TO ENSURE EASY INSTALLATION AND SPLICING OF CONDUCTORS. BOXES SHALL BE SIZED TO PROVIDE ADEQUATE FREE SPACE FOR ALL ENCLOSED CONDUCTORS. BOX SIZES SHALL NOT BE DETERMINED BY SCALING THE DRAWINGS.

1.16 METAL CONDUIT RACEWAY

A. RIGID METAL CONDUIT SHALL BE INSTALLED WHERE EXPOSED TO WEATHER, OR WHERE IMBEDDED OR PASSING THROUGH CONCRETE. NONMETALLIC CONDUIT MAY BE USED BELOW GRADE, INCLUDING BENEATH SLABS. FLEXIBLE METALLIC CONDUIT SHALL BE USED FOR FINAL CONNECTION TO ELECTRICAL EQUIPMENT SUBJECT TO MOVEMENT. EMT SHALL BE USED ELSEWHERE UNLESS OTHERWISE NOTED.

B. ALL COMPONENTS OF CONDUIT RACEWAY SYSTEMS SUCH AS CONDUIT, SEAL TIGHT CONDUIT, BOXES, SUPPORTS AND FITTINGS SHALL MEET THE LATEST APPLICABLE STANDARD OF UNDERWRITERS LABORATORIES, INC. ALL STEEL COMPONENTS OF CONDUIT RACEWAY SYSTEMS SHALL BE HOT-DIPPED GALVANIZED, METALLIZED, SHERADIZED, OR ZINC-COATED BY SOME OTHER APPROVED MEANS. SEAL TIGHT CONDUIT AND PVC CONDUIT SHALL HAVE SEPARATE GROUND CONDUCTOR.

C. USE MINIMUM SCHEDULE 40 PVC WHERE CONCRETE ENCASED AND SCHEDULE 80 WHERE NOT CONCRETE ENCASED.

D. PVC CONDUIT IS NOT ALLOWED EXCEPT FOR UNDERGROUND AND DUCT BANK INSTALLATIONS.

E. E.C. TO PROVIDE LINK SEALS AT ALL CONDUIT FLOOR PENETRATIONS. LINK SEALS ARE TO BE TESTED WIHT A 24-HOUR STANDING WATER TEST. COORDINATE TEST WITH MAC.

1.17 PULLBOXES

A. PULLBOXES SHALL BE INSTALLED AS REQUIRED IN LONG RUNS OR WHEN MORE THAN FOUR QUARTER BENDS OCCUR IN ANY CONDUIT RUN. ALL PULLBOXES SHALL BE SIZED TO CONFORM TO THE REQUIREMENTS OF ARTICLE 370 OF THE NATIONAL ELECTRIC CODE. PULLBOXES SHALL BE RECESSED IN ALL FINISHED PORTIONS OF THE BUILDING.

1.18 OPERATING INSTRUCTIONS & TESTING

A. THE CONTRACTOR SHALL FURNISH INSTRUCTION IN THE CARE, ADJUSTMENT, OPERATION, AND MAINTENANCE OF ALL PARTS OF THE ELECTRICAL EQUIPMENT. INSTRUCTION SHALL BE GIVEN TO EMPLOYEES DESIGNATED BY THE OWNER, AT NO ADDITIONAL COST TO THE OWNER, AND AT A TIME ACCEPTABLE TO THE OWNER, JUST PRIOR TO ACCEPTANCE OF THE EQUIPMENT BY THE OWNER.

B. THE CONTRACTOR SHALL TEST THE EQUIPMENT INSTALLED UNDER THIS SPECIFICATION AND SHALL DEMONSTRATE ITS PROPER OPERATION TO THE ENGINEER. NO EQUIPMENT SHALL BE TESTED OR OPERATED FOR ANY PURPOSE UNTIL IT HAS BEEN FULLY PREPARED, CONNECTED, AND READIED FOR NORMAL OPERATION. ANY EQUIPMENT DAMAGED BY IMPROPER OR ILL-TIMED OPERATION OR TESTING SHALL BE REPAIRED OR REPLACED, AT THE CONTRACTOR'S EXPENSE, BEFORE FINAL INSPECTION AND ACCEPTANCE.

C. THE CONTRACTOR SHALL FURNISH A COPY OF CERTIFICATION AND TEST REPORTS TO THE ENGINEER AND INCLUDE THE REPORTS IN THE O&M MANUALS.

D. TESTS ON ELECTRICAL EQUIPMENT SHALL BE COMPLETED. TESTS SHALL BE SUBMITTED FOR REVIEW WITHIN ONE WEEK OF TEST BEING PERFORMED.

E. THERMO GRAPHIC SURVEYS SHALL BE DONE BY A NETA LEVEL III OR AN ANST LEVEL II THERMOGRAPHER AND WRITTEN DOCUMENTATION OF THE PERSON(S) QUALIFICATIONS SHALL BE SUBMITTED.

1.19 OTHER

A. ALL CIRCUITS SPECIFIED ARE DESIGNED ON THE BASIS OF LOAD REQUIREMENTS AND CONTROL PROCEDURES AS INDICATED. THE CONTRACTOR SHALL MAKE THE NECESSARY CHANGES TO THE CIRCUITS AND CONTROL EQUIPMENT WHERE MOTORS, APPLIANCES, AND DEVICES FURNISHED BY THE CONTRACTOR HAVE OTHER RATINGS THAN THOSE INDICATED.

PART 2 - PRODUCTS

2.01 DISCONNECT SWITCHES

A. THE CONTRACTOR SHALL FURNISH AND INSTALL DISCONNECT SWITCHES HAVING THE NUMBER OF POLES AND AMPERE RATINGS AS SHOWN ON THE DRAWINGS AND AS SPECIFIED IN THE EQUIPMENT SCHEDULE.

B. DISCONNECT SWITCHES SHALL BE HEAVY DUTY, AC, SINGLE THROW SAFETY SWITCHES, BUILT IN ACCORDANCE WITH NEMA REQUIREMENTS WITH A VOIDABLE FULL COVER INTERLOCK AND QUICK-MAKE, QUICK-BREAK MECHANISM. EACH SWITCH SHALL BE FUSIBLE UNLESS NONFUSIBLE (NF) IS SPECIFICALLY INDICATED. SWITCHES SHALL BE IN NEMA 1 ENCLOSURES IN DRY LOCATIONS AND NEMA 3 WHERE EXPOSED TO THE WEATHER. DISCONNECT SWITCHES SHALL BE "HEAVY-DUTY" AS MANUFACTURED BY WESTINGHOUSE, OR SQUARE-D.

C. DISCONNECT SWITCHES RATED AT 20A SHALL BE GENERAL USE, 20A, AC, SNAP SWITCH WIRING DEVICES.

2.02 FUSES

A. THE CONTRACTOR SHALL FURNISH AND INSTALL FUSES OF THE TYPES AND RATINGS DESIGNATED IN THE DRAWINGS AND SPECIFICATIONS IN EACH FUSIBLE DEVICE INSTALLED BY THE CONTRACTOR. IN ADDITION, THE CONTRACTOR SHALL FURNISH AND STORE, AT A LOCATION DIRECTED BY THE OWNER, THREE (3) SPARE FUSES OF EACH SIZE AND TYPE INSTALLED DURING THIS PROJECT. THE CONTRACTOR SHALL PROVIDE TWO (2) COPIES OF THE A SPARE FUSE LIST TO THE OWNER FOR OWNER'S RECORDS. THE SPARE FUSE LIST SHALL BE TYPED ON THE CONTRACTOR'S LETTERHEAD.

B. FUSES SHALL BE ONE-TIME CARTRIDGE FUSES MANUFACTURED BY BUSSMAN, GOULD SHAWMUT, OR LITTLE FUSE.

2.03 WIRE AND CABLE

A. ELECTRICAL CONDUCTORS SHALL BE BUILDING WIRE, EXCEPT WHERE SOME OTHER TYPE OF WIRE OR CABLE IS SPECIFICALLY INDICATED.

B. BUILDING WIRE CONDUCTORS SHALL BE SOFT-DRAWN ANNEALED COPPER, HAVING A CONDUCTIVITY OF NOT LESS THAN 98% PURE COPPER. CONDUCTOR SIZES ARE AMERICAN WIRE GAUGE (AWG) OR CIRCULAR MILS (MCM). MINIMUM CONDUCTOR SIZE SHALL BE #12 UNLESS OTHERWISE SPECIFIED. CONDUCTORS LARGER THAN #10 SHALL BE STRANDED. CONDUCTORS #10 AND #12 MAY BE STRANDED OR SOLID WIRE. ALUMINUM WIRE IS PROHIBITED.

C. BUILDING WIRE INSULATION SHALL BE RATED 600-VOLT, 90 DEGREE C MINIMUM TEMPERATURE RATING. CONDUCTORS SHALL HAVE TW, THW, THWN, OR THHN INSULATION UNLESS SPECIFICALLY NOTED OTHERWISE OR REQUIRED BY CODE OR APPLICATION TO BE OTHERWISE.

D. BASIC MINIMUM REQUIREMENTS: FOR LONG-TERM CABLE MANAGEMENT, INSTALL WIRING FOR FIRE ALARM, SECURITY AND POWER IN RACEWAYS. INSTALL SYSTEM WIRING AS FOLLOWS:

FIRE ALARM:	IN RACEWAY
CARD ACCESS:	IN RACEWAY
FIBER FOR SECURITY SYSTEMS:	IN RACEWAY
SOUND SYSTEM:	IN RACEWAY
DATA:	IN RACEWAY OR CABLE TRAY
FIBEROPTIC CABLE FOR NON-SECURITY SYSTEMS:	IN RACEWAY OR CABLE TRAY
POINT OF SALE (CASH REGISTERS)	IN RACEYWAY OR CABLE TRAY
TELEPHONE	IN RACEWAY OR CABLE TRAY

E. FIRESTOPPING

1. IDENTIFY AND PROVIDE INSTALLATION DETAILS FOR FIRESTOP METHODS AND PARTICULAR CONSTRUCTION MATERIALS THAT WILL BE ENCOUNTERED. INCLUDE DETAILS OF FIRESTOP SYSTEMS IN PLANS AND LIST SPECIFIC UL OR OTHER APPROVED TEST ASSEMBLY NUMBERS.
2. USE REMOVABLE FIRESTOP PILLOWS FOR CABLE TRAY PENETRATING FIRE-RATED WALLS.
3. PROVIDE WATERPROOF MECHANICAL COMPRESSION TYPE FLOOR FIRESTOPS IN AREAS LIKELY TO BECOME WET.

F. CONDUCTORS INSTALLED IN FLEXIBLE CONDUIT AT TERMINAL CONNECTIONS OF ROTATING, VIBRATING OR MOVEABLE EQUIPMENT SHALL BE STRANDED WIRE.

G. CONDUITS SHALL NOT CONTAIN SPLICES EVEN IF THEY HAVE THE CUBIC INCH CAPACITY.

H. WHERE OVERSIZED CONDUCTORS ARE INSTALLED, THE CONTRACTOR SHALL PROVIDE REDUCING CONNECTORS TO TERMINATE THE CONDUCTORS INTO LUGS AND CONNECTORS. DO NOT TRIM OFF STRANDS OF THE CONDUCTORS.

i. ALL WIRING (LINE VOLTAGE, LOW VOLTAGE, FIRE ALARM, ETC.) SHALL BE INSTALLED IN CONDUIT.

2.04 WIRING DEVICES

A. WIRING DEVICES SHALL BE INSTALLED IN METAL CONDUIT DEVICE BOXES.

B. SWITCHES AND RECEPTACLES SHALL BE HUBBELL, BRYANT LEVITON, PASS & SEYMOUR, OR APPROVED EQUAL SUBJECT TO APPROVAL BY THE ARCHITECT, COLOR SHALL BE GRAY FOR NORMAL, RED FOR EMERGENCY.

C. SWITCHES SHALL BE SPECIFICATION GRADE, AC QUIET TYPE, 20-AMP, 120/277-VOLT, WITH SILVER ALLOY CONTACTS, EQUAL TO HUBBELL #1221.

D. GENERAL PURPOSE DUPLEX RECEPTACLES SHALL BE SPECIFICATION GRADE NEMA 5-20R, 20-AMP, 125-VOLT, 3-WIRE GROUNDING TYPE DEVICES, EQUAL TO HUBBELL #5362, WITH THE THIRD POLE GROUNDED TO THE OUTLET BOX. EACH RECEPTACLE SHALL BE RIGIDLY POSITIONED WITHIN THE BOX SO THAT THE EXPOSED FACE OF THE RECEPTACLE PROTRUDES BEYOND THE FACE OF THE COVER PLATE.

E. GROUND FAULT CIRCUIT INTERRUPTER (GFI) DUPLEX RECEPTACLES SHALL BE SPECIFICATION GRADE, 20-AMP DEVICES, EQUAL TO HUBBELL #GF5362, WIRED SO THAT EACH UNIT IS SELF CONTAINED. GFI RECEPTACLES SHALL NOT BE CONNECTED TO FEED THROUGH UNLESS SPECIFICALLY SO NOTED ON THE DRAWINGS.

F. WEATHERPROOF DUPLEX RECEPTACLES SHALL BE GFCI PROTECTED WITH "WHILE-IN-USE" WEATHERPROOF COVERPLATES.

2.05 WALL AND COVER PLATES

A. THE CONTRACTOR SHALL FURNISH AND INSTALL WALL PLATES FOR ALL FLUSH MOUNTED WIRING DEVICES AND ALL FLUSH MOUNTED SPECIAL SYSTEM OUTLETS. SECTIONAL WALL PLATES SHALL NOT BE USED. BLANK PLATES SHALL BE INSTALLED OVER ALL OUTLETS PROVIDED FOR FUTURE USE. WALL PLATES SHALL BE NYLON AS MANUFACTURED BY EAGLE, BRYANT, GENERAL ELECTRIC, HUBBELL OR LEVITON. WALL PLATES SHALL BE SECURED WITH MATCHING SCREWS. ENGRAVED WALL PLATES SHALL HAVE BACK FILL. PROVIDE SATIN FINISH NO. 302 NON-MAGNETIC TYPE STAINLESS STEEL WALL PLATES.

B. COVER PLATES FOR TELEPHONE, SHALL BE AS SPECIFIED ABOVE.

2.06 MANUAL MOTOR STARTERS

A. MANUAL STARTERS SHALL BE TOGGLE SWITCH TYPE STARTERS. WHERE A RED PILOT LIGHT IS INDICATED, THE LIGHT SHALL BE A NEON BULB INTEGRAL WITH THE STARTER. FLUSH MOUNTING UNITS SHALL HAVE ENGRAVED WALL PLATES. SURFACE MOUNTING UNITS SHALL BE IN NEMA 1 ENCLOSURES, UNLESS SOME OTHER TYPE OF ENCLOSURE IS INDICATED. MANUAL STARTERS SHALL BE CUTLER HAMMER BULLETIN 9101 OR SQUARE-D CLASS 2510.

2.07 DRY-TYPE TRANSFORMERS

A. AT A MINIMUM, TRANSFORMERS SHALL MEET THE ENERGY EFFICIENCY REQUIREMENTS OF DOE 10 CFR 431 SECTION 196.

B. GENERAL REQUIREMENTS:

1. COMPLY WITH ANSI C57 REQUIREMENTS.
2. TESTED PER ANSI C57.
3. UL LISTED AND LABELED.
4. 220 DEGREE C VACUUM-PRESSURE-IMPREGNATED (VPI) INSULATION SYSTEM.
5. MAXIMUM 115 DEGREE C DESIGN TEMPERATURE RISE WITH CLASS H INSULATION.
6. 95 KV PRIMARY BIL FOR 13.8 KV AND 60 KV PRIMARY BIL FOR 4160V WITHOUT THE USE OF SURGEARRESTORS.
7. DELTA-CONNECTED PRIMARY WINDINGS.
8. WYE-CONNECTED SECONDARY WINDINGS.
9. PIANO-HINGED DOORS FRONT AND BACK ON DRY-TYPE TRANFORMERS FOR THERMAL SCANNING.
10. PROVIDE VIBRATION ISOLATION BETWEEN CORE AND MOUNTING STRUCTURE AND FLEXIBLE BUS CONNECTIONS TO PRIMARY AND SECONDARY TERMINALS TO MINIMIZE NOISE TRANSMISSION.
11. PROVIDE KNOCKDOWN ENCLOSURE PERMITTING REMOVAL OF CORE AND COIL ASSEMBLY WITHOUT DISTURBING ADJACENT EQUIPMENT SECTIONS.
12. PROVIDE INTERNAL GROUND BUS, CONTINUOUS THROUGH UNIT SUBSTATION LINEUP.
13. PROVIDE TWO 2-1/2 PERCENT TAPS FCAN AND FOUR 2-1/2 PERCENT TAPS FCBN.
14. PROVIDE PROVISIONS FOR FUTURE FORCED AIR COOLING (AA/FFA RATING) WITH HEAT SENSORS WIRED TO TERMINAL BLOCK AS A MINIMUM. IF FORCED AIR COOLING IS PROVIDED (AA/FA RATING), FANS SHALL UTILIZE A SOLID-STATE CONTROLLER WITH A TEMPERATURE SENSOR IN EACH WINDING. FAN CONTROLLER SHALL HAVE HIGH TEMPERATURE ALARM AND CIRCUIT BREAKER TRIPPING CONTACTS FOR FUTURE USE. SPECIFICATIONS SHALL REQUIRE THE CONTRACTOR TO PROVIDE ON SPARE TEMPERATURE SENSOR AND TWO SPARE COOLING FAN/MOTOR ASSEMBLIES FOR EACH TRANSFORMER.
15. PROVIDE TRANSFORMERS WITH MINIMUM SPACING OF 36" FROM WALLS OR OTHER EQUIPMENT TO THE REAR TO PERMIT ACCESS TO COOLING FANS. TRANSFORMERS WITH ALL COOLING FANS ACCESSIBLE FROM THE FRONT SHALL BE INSTALLED WITH A MINIMUM OF 12 INCHES CLEARANCE TO THE REAR FOR VENTILATION.
16. PROVIDE PRIMARY BUS AND TAP CONNECTIONS ON THE FRONT SIDE OF THE TRANSFORMER INSTALLATION. NEC AND NESC ENERGIZED WORK CLEARANCE SHALL BE PROVIDED ON THE FRONT SIDE OF THE INSTALLATION.
17. PROVIDE IR WINDOWS IN TRANSFORMER ENCLOSURE TO ALLOW FOR IR SCANNING OF CABLE/BUS TERMINATIONS AND CONNECTIONS. IR WINDOWS SHALL BE BARIUM OR CALCIUM FLUORIDE CRYSTAL INFRARED WINDOWS FOR BOTH LONG AND SHORT WAVE THERMOGRAPHY AND VISUAL INSPECTIONS.

C. TRANSFORMERS SHALL BE PROVIDED WITH SURGE ARRESTORS, LOCATED AS CLOSE TO THE PRIMARY TERMINALS AS PRACTICAL WITH A DIRECT CONNECTION TO THE EQUIPMENT GROUND BUS. ARRESTORS SHALL BE DISTRIBUTION CLASS, MOV-TYPE WITHIN A POLYMER HOUSING. KV DUTY CYCLE SHALL BE BASED ON VOLTAGE AND POWER SYSTEM CONFIGURATION.

D. TRANSFORMER SIZES AND TYPES FOR WHICH ANSI STANDARDS DO NOT ESTABLISH A STANDARD IMPEDANCE VALUE SHALL BE SPECIFIED TO HAVE A MINIMUM IMPEDANCE OF 5.75% UNLESS SPECIFIC DESIGN CONSIDERATIONS DICTATE OTHERWISE.

E. SPECIFICATIONS SHALL REQUIRE THAT THE CERTIFIED DESIGN TESTS PER ANSI C57 BE PERFORMED AT THE FACTORY AND ON-STIE AFTER INSTALLATION. CERTIFIED FACTORY REPORTS OF TESTS ARE TO BE SUBMITTED, REVIEWED AND APPROVED BY THE A/E PRIOR TO SHIPMENT OF THE TRANSFORMER AND INCLUDED IN THE O&M MANUALS.

F. ADJUST TRANSFORMER TAPS TO PROVIDE OPTIMUM VOLTAGE CONDITIONS AT UTILIZATION EQUIPMENT THROUGHOUT THE NORMAL OPERATING CYCLE OF THE FACILITY. VOLTAGES AND TAP SETTINGS SHALL BE INCLUDED IN THE O&M MANUAL.

2.08 PANELBOARDS

A. PANELBOARDS SHALL BE SQUARE D, GE, SIEMENS OR CUTLER-HAMMER.

B. PANELBOARDS SHALL BE DEAD FRONT SAFETY TYPE WITH ENCLOSURES OF CODE GRADE STEEL. OVERSIZE GUTTERS SHALL BE PROVIDED FOR FEED THROUGH WHERE INDICATED OR REQUIRED. WHERE DOUBLE LUGS ARE NOT PERMITTED BY LOCAL CODE, A SUITABLE PULL BOX OR GUTTER ADJACENT TO PANELS SHALL BE PROVIDED FOR CONNECTIONS. TOP OF PANELBOARD TUBS SHALL BE 6'-6" ABOVE FINISHED FLOOR.

C. PANELBOARDS SHALL HAVE TRIM AND FLAT LOCKING DOORS WITH BOTH HINGES AND TRIM CLAMPS COMPLETELY CONCEALED. DOOR LOCKS SHALL BE FLUSH WITH THE COVER. ALL DOOR LOCKS SHALL BE COMMON KEYED. PROVIDE HINGED COVERS FOR PANELBOARDS. COVERS SHALL BE HINGED WITH FULL LENGTH PIANO-TYPE HINGES (TRUE DOOR-IN-DOOR CONSTRUCTION IS NOT ACCEPTABLE). TWO (2) KEYS SHALL BE PROVIDED FOR EACH PANELBOARD. A CLEAR PLASTIC-COVERED TYPEWRITTEN CIRCUIT DIRECTORY SHALL BE MOUNTED IN A METAL CARD HOLDER ATTACHED TO THE INNER SIDE OF THE DOOR. PANELBOARDS SHALL HAVE BLACK MICARTA PLATES WITH 1/2-INCH HIGH WHITE CUT LETTERS STATING PANELBOARD NUMBER AND VOLTAGE. WHERE PANELBOARDS ARE IN PUBLIC AREAS, IDENTIFICATION PLATES SHALL BE INSIDE DOOR. PANELBOARDS TO BE A MINIMUM WIDTH OF 20 INCHES AND MINIMUM DEPTH OF 5-3/4 INCHES.

D. BUSES SHALL BE MADE FROM 98 PERCENT ELECTROLYTIC COPPER OR 55 PERCENT CONDUCTIVITY ALUMINUM AND SHALL BE INDEPENDENTLY SUPPORTED (WITHOUT DEPENDENCE UPON THE CIRCUIT BREAKERS). SOLDERLESS LUGS ONLY SHALL BE PROVIDED IN ALL MAINS UNLESS NOTED OTHERWISE IN THE PANELBOARD SCHEDULE. ALL MAIN LUGS SHALL BE CRIMP COMPRESSION TYPE. WHERE BREAKERS AND/OR SWITCHES ARE LISTED IN THE SCHEDULES AS "SPACE ONLY", THIS SHALL INCLUDE EXTENDED BUS AND MOUNTING PROVISIONS.

E. CIRCUIT BREAKERS SHALL BE BOLT-ON AND SHALL HAVE BOLTED LINE AND LOAD TERMINALS. ALL BRANCH CIRCUIT BREAKERS SHALL BE QUICK-MAKE, QUICK-BREAK, THERMAL MAGNETIC, COMMON TRIP ON ALL MULTIPOLE BREAKERS AND HAVE A MINIMUM UL SHORT CIRCUIT RATING OF 10,000 SYMMETRICAL R.M.S. AMPS. EACH BREAKER SHALL HAVE IT'S CURRENT RATING ENGRAVED, IN EASY TO READ NUMBERS, ON THE TOGGLE HANDLE. ALL BREAKERS USED FOR FLUORESCENT LIGHTING SWITCHING CONTROL SHALL BE UL LISTED "SWD" SWITCHING DUTY. BREAKERS SHALL BE EATON, SQUARE D, GE OR SIEMENS.

F. CIRCUIT NUMBERS APPEARING ON DRAWINGS SHALL BE USED FOR REFERENCE ONLY. ACTUAL CONNECTIONS SHALL BE IN ACCORDANCE WITH PHASING OF THE CABINET, LOAD BALANCE, AND COMMON NEUTRAL REQUIREMENTS. ROOM NUMBERS OR NAMES USED FOR CIRCUIT IDENTIFICATION SHALL CORRESPOND TO NAME PLATES INSTALLED ON ROOM DOORS BY THE GENERAL CONTRACTOR OR AS SELECTED BY THE OWNER AND SHALL BE VERIFIED AS THESE MAY NOT BE THE SAME AS ROOM TITLES ON THE DRAWINGS.

2.09 LOW VOLTAGE TRANSFORMERS

A. TEMPERATURE RISE: PROVIDE DRY-TYPE TRANSFORMERS 25-KVA AND LARGER WITH MAXIMUM OF 150 DEGREES C TEMPERATURE RISE ABOVE A 40 DEGREE C AMBIENT TEMPERATURE WITH A 220 DEGREES C RATED INSULATION SYSTEM.

B. PROVIDE NEOPRENE PADS TO SUPPORT THE TRANSFORMER COILS AND UNDER TRANSFORMER CASING.

C. PROVIDE MINIMUM 2-2.5% TAPS ABOVE AND BELOW NORMAL.

D. PROVIDE FULL HEIGHT HINGED DOORS ON THE TERMINAL SIDE OF THE TRANSFORMER. INSTALL TRANSFORMER SO THE DOOR AND TERMINALS ARE ACESSIBLE.

E. TRANSFORMERS 75-KVA AND SMALLER SHALL BE SUSPENDED FROM THE STRUCTURAL CEILING.

F. TRANSFORMERS SHALL COMPLY WITH THE REQUIREMENTS OF THE DOE CSL-3 EFFIICENCY CLASSIFICATION.

2.10 TRANSIENT VOLTAGE SURGE SUPPRESSION

NOT USED.

© COPYRIGHT WILKUS ARCHITECTS

CONSULTANT:

DUNHAM
50 South Sixth Street / Suite 1100
Minneapolis, Minnesota 55402-1540
PHONE 612.465.7550
FAX 612.465.7551
WEB dunhameng.com
mechanical + electrical consulting engineering
Dunham Project No.: 0426995-132

CLIENT:

FRED JACQUES
ALLIANCE DEVELOPMENT
230 OHIO ST, SUITE 200
OSHKOSH, WI 54902
(612) 313-0126

PROJECT INFORMATION:

SOUTH LA CROSSE SHELL
MORMON COULEE RD & LOSEY BLVD S
LA CROSSE, WI 54601

NOT FOR CONSTRUCTION

01/09/2026

PROJECT NO.: 0425995-132
DRAWN BY: AZ
CHECKED BY: CM/RM

ISSUE:	DATE:
PERMIT SET	01/09/2026

REVISION:	DATE:

TITLE:

ELECTRICAL SPECIFICATIONS

SHEET NUMBER:

E3

2.11 LIGHTING FIXTURES

A. LIGHTING FIXTURES: SET LEVEL, PLUMB, AND SQUARE WITH CEILINGS AND WALLS COMPLYING WITH NFPA 70 FOR FIXTURE SUPPORTS. INSTALL NEW LAMPS IN EACH FIXTURE.

B. SUSPENDED LIGHTING FIXTURE SUPPORT:

1. PENDANTS AND RODS: WHERE LONGER THAN 48 INCHES, BRACE TO LIMIT SWINGING.

2. STEM-MOUNTED, SINGLE-UNIT FIXTURES: SUSPEND WITH TWIN-STEM HANGERS.

3. CONTINUOUS ROWS: USE TUBING OR STEM FOR WIRING AT ONE POINT AND TUBING OR ROD FOR SUSPENSION FOR EACH UNIT LENGTH OF FIXTURE CHASSIS, INCLUDING ONE AT EACH END. ALTERNATE: FLEXIBLE CORD CONNECTION FOR SINGLE CIRCUIT.

C. ADJUST AND AIM LIGHTING FIXTURES TO PROVIDE REQUIRED LIGHT INTENSITIES ON VERTICAL SURFACES OR AT DIRECTIONS NOTED ON DRAWINGS. PROVIDE ADDITIONAL ADJUSTMENTS FOR OWNER PRIOR TO FINAL TURNOVER OR AT SUBSTANTIAL COMPLETION.

D. LIGHTING FIXTURES MOUNTED IN CONTINUOUS ROWS MAY BE END FED WITH ONLY THE CIRCUITS FEEDING THE ROW (PASSING THROUGH OF OTHER CIRCUITS NOT ALLOWED) WITH EACH ROW FED FROM INDIVIDUAL JUNCTION BOXES AT THE END FEED POINT.

E. LIGHTING FIXTURES MUST HAVE INDIVIDUAL FEEDS TO EACH FIXTURE EXCEPT FOR TANDEM FIXTURES. "DAISY-CHAINING " OF FIXTURES NOT ALLOWED. THE LIGHTING FIXTURE WHIPS MUST BE 6-FEET LONG OR LESS.

2.13 LIGHTING CONTROLS

A. PROVIDE END-OF-LIFE BALLASTS OR LAMP CIRCUITRY FOR COMPACT FLUORESCENT LAMPS.

2.14 GROUNDING SYSTEMS

A. CIRCUITS, METAL RACEWAY SYSTEMS, AND ALL OTHER PERMANENTLY INSTALLED ELECTRICAL EQUIPMENT SHALL BE SOLIDLY GROUNDED IN ACCORDANCE WITH THE NATIONAL ELECTRICAL CODE TO FORM A CONTINUOUS, PERMANENT AND EFFECTIVE GROUNDING SYSTEM.

B. GROUNDING CONDUCTOR CONNECTIONS SHALL BE MADE WITH SOLDERLESS PRESSURE TYPE FITTINGS. WHERE WELDED CONNECTIONS ARE PRACTICAL, CONNECTIONS MAY BE MADE BY THE USE OF A SUITABLE WELDING PROCESS. ALL CONNECTIONS SHALL BE MADE IN STRICT CONFORMANCE WITH THE MANUFACTURER'S RECOMMENDATIONS.

C. TO MAINTAIN UNINTERRUPTED ELECTRICAL CONTINUITY, FLEXIBLE RACEWAY SECTIONS MUST HAVE CONDUCTANCE EQUAL TO THAT OF THE SYSTEM'S INFLEXIBLE RACEWAY. RACEWAY FITTINGS USED MUST BE SUCH AS TO ENSURE EXISTENCE OF A PERMANENT BOND. GROUNDING BUSHINGS SHALL BE PROVIDED TO GROUND CONDUITS TO CONTROL CENTER GROUND. ALL NEW EQUIPMENT SHALL BE GROUNDED TO THE EXISTING GROUNDING SYSTEM.

D. PROVIDE SERVICE GROUNDING AS INDICATED ON ONE-LINE DIAGRAM.

E. INCLUDE A SEPARATE BARE GROUND CONDUCTOR IN ALL TYPE NM CABLE OF THE SAME SIZE AS PHASE CONDUCTOR.

F. INCLUDE A SEPARATE GROUND CONDUCTOR IN ALL PVC RACEWAY.

G. INSTALL COPPER GROUNDING CONDUCTOR IN BRANCH AND FEEDER CIRCUITS. PROVIDE TWO COPPER CONDUCTORS FOR ISOLATED GROUND CIRCUITS.

H. ALL CONDUITS 1" AND LARGER, ENTERING AND EXITING ALL ELECTRICAL EQUIPMENT ENCLOSURES SHALL BE GROUNDED WITH GROUNDING BUSHINGS.

I. FOR UNIFORMITY AND TO AVOID CONFUSION FOR SEPARATELY DERIVED SYSTEMS THE GROUNDING ELECTRODE AND BONDING CONNECTIONS ARE TO BE MADE AT THE TRANFORMER.

2.15 IDENTIFICATION AND LABELING OF ELECTRICAL EQUIPMENT

A. SWITCHING DEVICES, CIRCUIT BREAKERS AND METERING ON MAIN SWITCHBOARDS AND DISTRIBUTION PANELBOARDS SHALL BE IDENTIFIED WITH BLACK-WHITE-BLACK LAMINATED 1/8 INCH THICK PLASTIC PLATES. PLASTIC PLATES SHALL BE ATTACHED TO THE EQUIPMENT WITH SCREWS AND RIVETS.

B. PROVIDE IDENTIFICATION PLATES FOR ALL DISTRIBUTION EQUIPMENT FROM THE SERVICE THROUGH BRANCH CIRCUIT PANELBOARDS AND MOTOR CONTROL CENTERS. LABELS SHALL IDENTIFY BOTH THE EQUIPMENT DESIGNATION AND THE SOURCE SUPPLYING THE EQUIPMENT.

C. MOTOR AND ASSOCIATED STARTER OR EQUIPMENT DESIGNATIONS SHALL BE THE SAME.

D. SHOP DRAWINGS: A COMPLETE LIST OF IDENTIFICATION LABELS. THE LIST SHALL BE UPDATED AND VERIFIED WITH THE ENGINEER PRIOR TO THE MANUFACTURE OF THESE LABELS TO REFLECT CHANGES MADE DURING THE CONSTRUCTION OF THE PROJECT.

E. IDENTIFICATION LABELS FOR EQUIPMENT OR DEVICES SHALL BE BLACK-WHITE-BLACK LAMINATED PLASTIC PLATES. CHARACTERS SHALL BE CUT THROUGH THE BLACK TO SHOW THE WHITE OF THE PLATE. INSCRIPTIONS SHALL BE SYMMETRICAL TO THE CENTERLINE OF PLATES.

F. LABELS SHALL BE SIMILAR AND EQUAL TO TROPHY HOUSE, MINNEAPOLIS, MINNESOTA OR SETON NAME PLATE CORPORATION, NEW HAVEN, CT.

G. LAMINATED PLASTIC NAMEPLATES SHALL BE ATTACHED TO THE EQUIPMENT OR DEVICES SURFACES WITH TWO SELF-TAPPING CHROME-HEADED SCREWS OR RIVETS. SELF-STICKING ADHESIVE BACKED NAMEPLATES WILL NOT BE ACCEPTED.

H. STAINLESS STEEL PLATES SHALL BE TYPE 302 SATIN FINISH. INSCRIPTIONS SHALL BE ENGRAVED 1/4-INCH HIGH AND FILLED WITH BLACK.

I. WIRE MARKERS SHALL BE ADHESIVE WRITE-ON TAPE WITH CLEAR ADHESIVE OVER-WRAP, AS MANUFACTURED BY BRADY MANUFACTURING, T & B, PANDUIT OR IDEAL.

J. EMBOSSED TAPE SHALL NOT BE USED.

K. ANSI SIZED, VINYL, SELF ADHESIVE, CONDUIT MARKERS COLOR CODED PER CONTROL SYSTEMS WITH A MINIMUM OF 1/2-INCH HIGH PRE-PRINTED LETTERS. FOR LARGER CONDUITS, LABELS AND TEXT SHALL BE SIZED ACCORDING TO ANSI PIPE LABELING STANDARDS.

L. MOTOR OR HEATER CONTROL DEVICES - MANUAL MOTORS, SWITCHES, MOTOR TOGGLE SWITCHES, PUSHBUTTONS, THERMOSTATS, ETC. SHALL BE IDENTIFIED WITH A LAMINATED PLASTIC NAMEPLATE. ALL NAMEPLATE INSCRIPTIONS SHALL INDICATE THE EQUIPMENT BEING CONTROLLED, I.E., "TOILET EXH", "RANGE HOOD", ETC. AS DESCRIBED IN THE EQUIPMENT SCHEDULE AND THE BRANCH CIRCUIT SOURCE, E.G. 'PANEL L-2'.

M. MOTOR OR HEATER DISCONNECTS AND STARTERS - EACH SAFETY SWITCH, TOGGLE SWITCH OR STARTER SHALL BE IDENTIFIED WITH A LAMINATED PLASTIC NAMEPLATE. NAMEPLATE INSCRIPTIONS SHALL INDICATE THE EQUIPMENT BEING CONTROLLED, ITS MOTOR NUMBER AND ITS MOTOR NUMBER AS LISTED IN THE EQUIPMENT SCHEDULE AND THE APPROPRIATE SCHEDULE ON THE MECHANICAL DRAWINGS, E.G. "TOILET EXH (MOT #4, PRV-1)", ETC. AND TO INCLUDE THE BRANCH CIRCUIT SOURCE, E.G. "PANEL L-2".

N. SWITCHBOARDS, MOTOR CONTROL CENTERS AND PANELBOARDS: A LAMINATED PLASTIC NAMEPLATE SHALL BE PROVIDED ON THE OUTSIDE OF EACH PANELBOARD IN MECHANICAL AND ELECTRICAL EQUIPMENT ROOMS AND ON THE INSIDE OF THE DOOR OF EACH PANELBOARD LOCATED IN OTHER FINISHED AREAS. INSCRIPTIONS SHALL INDICATE THE PANEL NAME, VOLTAGE, PHASE, WIRES, FEEDER SIZES AND FEEDER SOURCE, E.G.: "PANEL L1, 120/208-3PH-4W, 2-INCHES-3 #2 & 1 #8 GRD THHN, FED FROM PANEL H1".

O. DRY-TYPE TRANSFORMERS: A LAMINATED PLASTIC NAMEPLATE SHALL BE PROVIDED WHICH SHALL INDICATE THE NAME OF THE TRANSFORMER AND PRIMARY FEEDER SIZE AND SOURCE, E.G. "TF-1, 1-1/4 INCHES - 3#1 & 1 #8 GRD, FED FROM PANEL H1".

P. EACH DISCONNECT SWITCH OR CIRCUIT BREAKER IN SWITCHBOARDS OR MOTOR CONTROL CENTERS OR INDIVIDUALLY MOUNTED SHALL BE IDENTIFIED WITHA LAMINATED PLASTIC NAMEPLATE. INSCRIPTIONS SHALL INDICATE THE DEVICE SERVED, E.G. "PANEL L1, HVAC UNIT #1, CAPACITORS, " ETC.

Q. TIME SWITCHES, CONTRACTOR CABINETS, AUTOMATIC LIGHTING CONTROLS, SHALL BE IDENTIFIED WITH LAMINATED PLASTIC NAMEPLATES. INSCRIPTIONS SHALL INDICATE THE EQUIPMENT CONTROLLED, E.G. "PARKING LOT LIGHTS", ETC.

R. EMERGENCY EQUIPMENT: ELECTRICAL EQUIPMENT THAT IS CONNECTED TO THE BUILDING EMERGENCY SYSTEM SHALL ALSO BE LABELED.

S. JUNCTION BOXES SHALL HAVE PANEL AND CIRCUITS IDENTIFIED ON JUNCTION BOX COVER.

T. CONDUCTORS

1. BRANCH CIRCUIT CONDUCTORS SHALL BE IDENTIFIED AS FOLLOWS: IN OUTLET BOXES, BRANCH CIRCUIT CONDUCTORS SHALL BE IDENTIFIED BY ONE OF THE FOLLOWING OPTIONS:

A. OPTION A - WITH FULL WRAP SELF-ADHESIVE WIRE MARKERS TO INDICATE PANELBOARD CIRCUIT NUMBER (E.G. "L-2").

B. OPTION B - THE INSIDE OF THE BOX SHALL BE MARKED EITHER ON THE SIDE OR BACK OF THE BOX, WITH A BLACK INDELIBLE 'MAGIC MARKER' TO INDICATE THE PANELBOARD AND CIRCUIT NUMBERS OF THE CONDUCTORS CONTAINED IN TEH BOX (E.G. "H4-2, 4, 6").

C. OPTION C - IN UNFINISHED AREAS, MARK THE OUTSIDE OF THE BOX OR THE CONDUIT TO THE BOX WITH A BLACK INDELIBLE 'MAGIC MARKER' TO INDICATED THE PANELBOARD AND CIRCUIT NUMBERS OF THE CONDUCTORS CONTAINED IN THE BOX (E.G.: "H4-2,4,6").

2. IN JUNCTION BOXES AND PULLBOXES, BRANCH CIRCUIT CONDUCTORS SHALL BE IDENTIFIED BY ONE OF THE FOLLOWING OPTIONS:

A. OPTION A - WITH FULL WRAP SELF-ADHESIVE WIRE MARKERS TO INDICATE PANELBOARD CIRCUIT NUMBER (E.G. "L-2").

B. OPTION B - IN UNPAINTED AREAS OUTSIDE OF THE BOX SHALL BE MARKED WITH A BLACK INDELIBLE 'MAGIC MARKER' TO INDICATE THE CIRCUIT NUMBERS OF THE CONDUCTORS CONTAINED IN THE BOX (E.G. "H4-2, 4, 6"). MARK THE INSIDE OF THE BOX COVER IN PAINTED AREAS.

C. OPTION C - A TAG SHALL BE ATTACHED BY STRING TO EACH GROUP OF CONDUCTORS THAT ENTER THE PULL BOX OR JUNCTION BOX (I.E. ON TAG PER CONDUIT). TAGS SHALL BE MARKED WITH A BLACK INDELIBLE FELT TIP PEN TO INDICATE THE CIRCUIT NUMBERS OF THE CONDUCTORS (E.G.: "H4-2,4,6").

U. PANELBOARD DIRECTORIES: INSTALL TYPEWRITTEN CIRCUIT DIRECTORIES TO INDICATE THE BRANCH LOAD TYPES AND AREAS SERVED IN PANELBOARDS. PROVIDE NEW DIRECTORIES IN EXISTING PANELS WHERE CIRCUITS HAVE BEEN MODIFIED, ADDED OR DELETED. INCLUDE ON THE DIRECTORY THE DATE THE DIRECTORY IS INSTALLED AND THE ELECTRICAL CONTRACTORS COMPANY NAME. CLEAR, PLASTIC-COVERED POCKETS SHALL BE PROVIDED IN PANELBOARDS FOR DIRECTORIES TO BE PLACED IN. LEAVE OLD DIRECTORIES FOR EXISTING PANELBOARDS IN POCKET BEHIND NEW DIRECTORY. PROVIDE TYPED CIRCUIT SCHEDULE MOUNTED IN HOLDER FOR EACH PANEL. THE SCHEDULE SHALL IDENTIFY CIRCUITS BY ROOM NUMBER USING FINAL NUMBERS FURNISHED BY THE MAC. VERIFY ROOM NUMBERS WITH MAC.

V. INSCRIPTIONS: INSCRIPTION CHARACTERS ON THE SWITCHBOARD, PANELBOARDS, METERING, TERMINAL CABINETS AND FUSE STORAGE CABINET SHALL BE A MINIMUM OF 1/4-INCH HIGH. INSCRIPTION CHARACTERS ON OTHER IDENTIFICATION PLATES SHALL BE MINIMUM OF 1/8-INCH HIGH.

W. CONDUITS AND JUNCTION BOXES: ALL CONDUITS FOR SYSTEMS INDICATED SHALL BE INDENTIFIED WITHIN 3-FEET (ENTRANCE TO) OF JUNCTION BOXES, 25-FEET ON CONTINUOUS RUNS OF CONDUIT AND A MINIMUM OF 1 MARKER PER ROOM USING CONDUIT MARKERS. PAINT JUNCTION BOX COVERS WITH ENAMEL SPRAY PAINT FOR ANY SYSTEM NOT HAVING COLORED CONDUIT SPECIFIED. COLORS FOR JUNCTION BOX COVERS AND CONDUIT LABELS TO BE AS FOLLOWS:

MAC SYSTEM	JUNCTION BOX COVER COLOR	CONDUITS/RACEWAY
1. FIRE ALARM	RED	RED/WHITE LETTERS "FIRE ALARM AND RED CONDUIT.
2. 120/208V SYSTEM	GRAY	GRAY/BLACK LETTERS "120/208 VOLT SYSTEM"
3. 277/480V SYSTEM	SAND	SAND/BLACK LETTERS "277/480 VOLT SYSTEM"
4. LOW VOLTAGE		WHITE/BLACK LETTERS INDICATING SPACE NUMBERS (E.G. "E-2283 COMM")

FOR ALL OTHERS, CONSULT 'MAC DESIGN AND CONSTRUCTION STANDARDS'

2.16 SERVICE TO ELECTRICALLY-POWERED EQUIPMENT

A. THE CONTRACTOR SHALL FURNISH AND INSTALL OUTLETS FOR AND MAKE FINAL ELECTRICAL CONNECTIONS TO ALL MOTORS AND ELECTRICALLY POWERED EQUIPMENT INDICATED ON THE EQUIPMENT SCHEDULE.

B. THE CONTRACTOR SHALL OBTAIN EXACT INFORMATION PERTAINING TO LOCATION, ELECTRICAL CHARACTERISTICS, AND WIRING FOR EQUIPMENT FURNISHED BY OTHERS FROM THE CONTRACTOR FURNISHING THE EQUIPMENT. THIS INFORMATION SHALL BE VERIFIED BY EXAMINING NAMEPLATES AND MANUFACTURER'S WIRING DIAGRAMS. ANY DISCREPANCY BETWEEN THE EQUIPMENT REQUIREMENTS AND THE PROVISIONS MADE BY THESE SPECIFICATIONS SHALL BE REPORTED. EQUIPMENT DAMAGED AS A RESULT OF THE CONTRACTOR'S FAILURE TO OBSERVE MANUFACTURER'S REQUIREMENTS SHALL BE REPLACED OR REPAIRED BY THE CONTRACTOR. THE THERMAL PROTECTION ELEMENTS IN MANUAL STARTERS SHALL BE RECHECKED WITH NAME PLATE DATA AT THE SITE BEFORE OPERATION OF THE EQUIPMENT. WHERE NECESSARY, THE THERMAL PROTECTION ELEMENTS SHALL BE CHANGED TO PROPERLY PROTECT THE EQUIPMENT.

2.17 TELEPHONE AND NETWORK SYSTEM.

A. FOR EACH TELEPHONE OUTLET INDICATED ON THE DRAWINGS, PROVIDE TWO GANG BOX WITH SINGLE GANG MUD RING, AND 3/4" CONDUIT STUBBED INTO ACCESSIBLE CEILING SPACE. PROVIDE (1) 2" EMPTY CONDUIT STUBBED 5' BEYOND FOOTINGS FOR SERVICE ENTRANCE FROM THE TELEPHONE TERMINAL BOARD.

B. THE CONTRACTOR SHALL FURNISH AND INSTALL THE WIRE, CABLE, CONNECTING DEVICES, AND PROVIDE TESTING FOR WIRING SYSTEMS TO BE USED AS SIGNAL PATHWAYS FOR VOICE AND HIGH-SPEED DATA TRANSMISSION. PROVIDE A COMPLETE PREMISES DISTRIBUTION AND LOCAL AREA NETWORK CABLING SYSTEM TO SUPPORT THE TELEPHONE SYSTEM AND THE LOCAL AREA NETWORK. iNCLUDE OUTLETS, JACKS, PATCH PANELS AND PUNCH DOWN BLOCKS. COORDINATE INTERFACE OF TELEPHONE SERVICE ENTRANCE. COORDINATE THE FEATURES OF MATERIALS AND EQUIPMENT SO THEY FORM AN INTEGRATED SYSTEM. MATCH COMPONENTS AND INTERCONNECTIONS FOR OPTIMUM FUTURE PERFORMANCE.

C. THE CONTRACTOR SHALL ENGAGE AN EXPERIENCE INSTALLER WHO IS A REGISTERED COMMUNICATIONS DISTRIBUTION DESIGNER, CERTIFIED BY THE BUILDING INDUSTRY CONSULTING SERVICE INTERNATIONAL (BICSI). SUCH AS DELL COM, STERLING TECHNOLOGY SYSTEMS, AND LUCENT.

D. THE CONTRACTOR SHALL SHALL FURNISH AND INSTALL THE DISTRIBUTION RACKS WHICH SHALL BE FREESTANDING AND OR WALL MOUNTED MODULAR STEEL UNITS DESIGNED FOR TELECOMMUNICATIONS TERMINAL SUPPORT AND COORDINATED WITH DIMENSIONS OF THE UNITS TO BE SUPPORTED.

1. APPROXIMATE MODULE DIMENSIONS: 84 INCHES HIGH BY 22 INCHES WIDE OVERALL.
2. FINISH: BAKED-POLYESTER POWDER COAT.

2.18 FIRE ALARM SYSTEM

A. THE FIRE ALARM SYSTEM SHALL BE AN ELECTRICALLY SUPERVISED CLOSED CIRCUIT, ZONED TYPE SYSTEM. IT SHALL OPERATE TO SOUND AN ALARM AFTER ANY DETECTOR IS ACTUATED, UNTIL THE STATION IS RETURNED TO NORMAL. SHOP DRAWINGS SHALL INCLUDE A RISER DIAGRAM SPECIFICALLY DESIGNED FOR THIS PROJECT WHICH INCLUDES ALL DEVICE, WIRING AND CONTROL PANEL DATA PERTINENT TO THIS BUILDING SYSTEM. THE FIRE ALARM SYSTEM SHALL BE AS MANUFACTURED BY HONEYWELL.

B. SYSTEM OPERATION

1. MINIMUM CIRCUIT PERFORMANCE FOR SYSTEM SIGNALING LINE CIRCUITS (SLC) SHALL BE CLASS B, STYLE 4 AS DEFINED IN NFPA 72, THE NATIONAL FIRE ALARM CODE. NOTIFICATION APPLIANCE CIRCUITS (NAC) SHALL BE MINIMUM CLASS B, STYLE W. NETWORK (NODE-TO-NODE) CIRCUITS SHALL BE MINIMUM CLASS A, STYLE 7 WHEN CONNECTING NODES INSIDE THE SAME BUILDING.
2. SYSTEM CIRCUIT FAULT (TROUBLE) CONDITIONS SHALL INITIATE A TROUBLE SIGNAL ON THE SYSTEM CONTROL PANEL (FACP) AND CONTROL TERMINALS, AND SHALL RECORD A TROUBLE SIGNAL ON SYSTEM PRINTERS.

C. AUTOMATIC OPERATION: ALARM ACTUATION OF ANY MANUAL STATION OR OTHER INITIATING DEVICE SHALL CAUSE THE FOLLOWING:

1. FULL ANNUNCIATION OF THE ALARM CONDITION, TYPE AND LOCATION ON THE CONTROL TERMINALS. AN AUDIBLE SIGNAL SHALL SOUND AND THE ALARM CONDITION SHALL FLASH ON THE SCREEN UNTIL ACKNOWLEDGED. EMERGENCY INSTRUCTIONS SHALL BE DISPLAYED. THE DEVICE ADDRESS AND ITS CONDITION SHALL ALSO BE DISPLAYED AT THE FACP.

2. PRINTOUT THE ALARM CONDITIONS, TYPE AND LOCATION PLUS TIME AND DATE (ALL FIRE ALARM INITIATED EVENT COMMANDS SHALL BE RECORDED AUTOMATICALLY).

3. SIGNAL THE CENTRAL STATION SYSTEM.

4. UPON ACTIVATION OF DUCT SMOKE DETECTORS, CONTROL CONTACTS AT THE AIR HANDLING UNIT SHALL SHUT DOWN THE ASSOCIATED FAN UNIT.

5. UPON ACTIVATION OF AT LEAST TWO SMOKE DETECTORS AT A SECURED EXIT DOOR, CONTROL CONTACTS AT THE SECURITY SYSTEM CONTROLLER SHALL INITIATE THE DOOR RELEASE SEQUENCE.

D. CONTROL OF SMOKE DAMPERS SHALL BE BY ASSOCIATED DUCT SMOKE DETECTORS OR AREA SMOKE DETECTORS IN ACCORDANCE WITH CODE REQUIREMENTS.

E. PROVIDE SUPPLY AND RETURN AIR DUCT SMOKE DETECTORS FOR FANS 2000 CFM OR GREATER. DUCT SMOKE DETECTORS ARE NOT REQUIRED ON THE OUTSIDE SIDE OF MAKEUP AIR UNITS.

F. CONTROL RELEASE OF CARD ACCESS DOORS VIA FIRE ALARM CONTROL MODULES. COORDINATE WITH MAC POLICE.

G. MATERIAL

1. FIRE ALARM EQUIPMENT SHALL BE UL LISTED HONEYWELL CONTROL PANELS AND HONEYWELL USER INTERFACE COMPONENTS TO MATCH THE EXISTING SYSTEM.

2. PROVIDE INDIVIDUALLY ADDRESSABLE TYPE FIRE ALARM SYSTEMS AND DEVICES.

3. FIRE ALARM SIGNALS SHALL REPORT DIRECTLY VIA FIRE ALARM NETWORK CONNECTIONS TO THE USER INTERFACE MODULES AT THE MAC COMMUNICATIONS CENTER, THE FIRE STATION AND THE ELECTRICAL SHOP.

4. PROVIDE CONDUIT FOR FIRE ALARM SYSTEM WIRING. CONDUIT SHALL BE RED IN COLOR. PROVIDE MINIMUM 3/4" CONDUIT FOR LOOP WIRING.

5. FIRE ALARM DEVICES SHALL BE SPEAKERS WITH STROBES.

6. SMOKE DETECTORS SHALL BE IONIZATION AND PHOTOELECTRIC TYPE.

7. USER INTERFACE FLOOR PLAN GRAPHICS AND TEXT GRAPHICS ARE REQUIRED.

8. PROVIDE REMOTE INDICATORS FOR DUCT SMOKE DETECTORS.

9. PROVIDE FIRE ALARM MONITOR MODULE INDICATOR BELOW THE DROP CEILING FOR VALVE TAMPER SWITCHES.

10. PROVIDE SCREW-TYPE CONNECTORS, NOT PUSH-IN TYPE CONNECTORS.

H. WIRING

1. PROVIDE SOLID, TWISTED PAIR, UNSHIELDED THHN WIRING FOR THE FIRE ALARM SYSTEM CIRCUITS UNLESS NOTED OTHERWISE. FOR UNDERGROUND FIRE ALARM WIRING, XHHW-2 WIRING SHALL BE USED.

2. PROVIDE FIBER OPTIC CABLING WHERE REQUIRED DUE TO COPPER CABLE DISTANCE LIMITATIONS.

3. FOR SLC CIRCUITS, PROVIDE MINIMUM 16 GAUGE WIRING OR LARGER AS REQUIRED FOR VOLTAGE DROP. USE THE SAME SIZE WIRE FOR THE ENTIRE LOOP. PROVIDE 6-8 TWISTS PER FOOT.

A. USE THE FOLLOWING COLOR SCHEME FOR WIRING THE NETWORK BACKBONE CIRCUITS:

NETWORK: RED/YELLOW
AUDIONET: YELLOW/VIOLET
AUDIO: YELLOW/VIOLET
PAGE - PR 1 BLUE/BLACK
PAGE - PR 2 RED/BLACK
MIC RED (SHIELDED)
SYNC YELLOW/BLUE
24V RED/BLACK

B. USE THE FOLLOWING COLOR SCHEME FOR SLC CIRCUITS:

LOOP CIRCUITS

LOOP 1: RED/BLACK
LOOP 2: ORANGE/BLACK
LOOP 3: BLUE/BLACK
LOOP 4: YELLOW/BLACK
LOOP 5: PURPLE/BLACK

LOOP 6: ORANGE WITH BLUE STRIPE/BLACK
LOOP 7: BROWN/BLACK
LOOP 8: YELLOW WITH RED STRIPE/BLACK
LOOP 9: BROWN WITH RED STRIPE/BLACK
LOOP 10: BLUE WITH YELLOW STRIPE/BLACK

PROVIDE FOR MINIMUM OF 20 VOLTS AT THE DEVICES FOR THE DATA CIRCUITS.

POWER SUPPLY: +24V DC POWER, #14 RED.
POWER SUPPLY: -24V DC COMMON, #14 BLACK.

DOOR-HOLDER POWER: #14 BLUE/BLACK TWISTED PAIR.

4. FOR NAC CIRCUITS, PROVIDE MINIMUM 14-GAUGE UNTWISTED PAIR SOLID FOR HORN/STROBE WIRING AND MINIMUM 14-GAUGE TWISTED PAIR SOLID FOR SPEAKER WIRING. LIMIT CIRCUITS TO 1,000 FEET AND 1.5 AMPS UNLESS STATED OTHERWISE.

A. USE THE FOLLOWING COLOR SCHEME FOR HORN/STROBE CIRCUITS:

CIRCUIT 1: BROWN/BLACK
CIRCUIT 2: ORANGE/BLACK
CIRCUIT 3: YELLOW/BLACK
CIRCUIT 4: PURPLE/BLACK

B. USE THE FOLLOWING COLOR SCHEME FOR SPEAKER/STROBE CIRCUITS:

LOOP 1: RED/WHITE
LOOP 2: ORANGE/WHITE
LOOP 3: BLUE/WHITE
LOOP 4: YELLOW/WHITE
LOOP 5: PURPLE/WHITE
LOOP 6: ORANGE WITH BLUE STRIPE/WHITE
LOOP 7: WHITE/BROWN
LOOP 8: YELLOW WITH RED STRIPE/WHITE
LOOP 9: BROWN WITH RED STRIPE
LOOP 10: BLUE WITH YELLOW STRIPE/WHITE

5. PROVIDE YELLOW/RED WIRE FOR THE ADDRESSABLE MONITOR MODULE WIRE FROM THE MODULE TO THE APPLICABLE FLOW SWITCH OR TAMPER SWITCH. PROVIDE A LASS A LOOP FROM TEH SWITCH BACK TOT HE MODULE.

6. PROVIDE MINIMUM 2-1/8 INCH DEEP BY 4-11/16 INCH ELECTRICAL BOX WITH A TWO-GANG MUD RING FOR CONTROL MODULES AND MONITOR MODULES.

I. EXECUTION

1. THE FOLLOWING ITEMS ARE PROHIBITED:

A. WIRE NUT CONNECTIONS IN CONTROL PANELS

2. FOR NEW OR REMODELING PROJECTS INVOLVING THREE OR MORE CIRCUITS, PROVIDE A MINIMUM OF 24 HOURS NOTICE TO THE MAC COMMUNICATIONS CENTER WHEN THE CIRCUITS TO THE COMMUNICATIONS CENTER ARE TO BE ACTIVATED AND TESTED. DURING THE ACTIVATION, THE CONTRACTOR SHALL PROVIDE SEPARATE AND CONTINUOUS VOICE COMMUNICATION TO THE COMMUNICATIONS CENTER FROM THE WORKER AT THE REMOTE PANEL. THE WORKER SHALL COORDINATE WITH THE MAC PERSONNEL TO DISTINGUISH BONA FIDE ALARMS CAUSED BY TESTING.

3. FOR WORK INVOLVING A FEWER NUMBER OF CIRCUITS, NOTIFY THE COMMUNICATIONS CENTER (612-726-5577) BY TELEPHONE EACH DAY TO REPORT THE AFFECTED PANEL AND AREA OF WORK AND THAT WORK IS COMMENCING. ALSO, NOTIFY THE COMMUNICATIONS CENTER EACH DAY TO INDICATE THAT THE WORK FOR THAT DAY IS ENDING.

4. FOR NEW ALARM POINTS BEING ADDED TO EXISTING SYSTEMS, PROVIDE NOMENCLATURE THAT IS CONSISTENT WITH THE EXISTING. OBTAIN APPROVAL FOR ABBREVIATIONS AND NOMENCLATURE BY A REPRESENTATIVE FROM THE MAC DEPT. OF PUBLIC SAFETY.

5. COMPLETE THE PROGRAMMING OF THE SYSTEM DATABASE PRIOR TO ACTIVATING ANY FIRE ALARM SYSTEM ALARM POINTS.

6. MONITOR MODULES USED FOR MONITORING OF WATER FLOW AND TAMPER SWITCHES SHALL BE SINGLE POINT DEVICES. DUAL MONITOR MODULES WITH TWO DEVICE ADDERESSES PER MODULE ARE NOT ACCEPTABLE.

7. ALL ADDRESSABLE SYSTEM DEVICES SHALL BE LABELED IN A NEAT PERMANENT AND LEGIBLE MANNER. PROVIDE PROFESSIONALLY PRINTED VINYL ADHESIVE LABELS. LETTERING SHALL BE 1/4 INCH TEXT, BLACK ON WHITE.

8. HEIGHT FOR PULL STATIONS TO COMPLY WITH ADA REQUIREMENTS.

9. DO NOT LOAD SIGNALING LINE CIRCUITS GREATER THAN 75 PERCENT OF CAPACTIY. PROVIDE ONE SPARE SIGNALING LINE CIRCUIT OR CAPACITY FOR 50 ADDITIONAL INITIATING DEVICES IN THE FACP.

10. VISUAL NOTIFICATION APPLIANCES SHALL BE ALLOWED TO BE ON THE SAME CIRCUITS AUDIBLE NOTIFICATION APPLIANCES PROVIDED THE AUDIBLE DEVICES CAN BE SILENCED WHILE LEAVING THE VISUAL DEVICES ACTIVATED.

11. USE DOOR HOLD OPEN CIRCUITS FROM FIRE ALARM PANEL OR AUXILIARY FIELD MODULES IN LIEU OF AUXILIARY CONTACTS IN THE DETECTOR BASE.

12. PROVIDE REMOTE ALARM INDICATORS IDENTIFYING THE LOCATION OF CONCEALED INTIATING DEVICES (DUCT SMOKE DETECTORS, TAMPER SWIITCHES, ETC.). LOCATE REMOTE INDICATORS IN PUBLIC SPACES (SUCH AS CORRIDORS). PROVIDE REMOTE INDICATORS FOR DUCT SMOKE DETECTORS. MOUNT DAMPER CONTROL MODULES AND DETECTOR INDICATORS FLUSH IN THE DROP CEILING. PLACE DETECTOR INDICATORS BETWEEN 24" AND 36" HORIZONTAL DISTANCE FORM THE DETECTOR.

13. CONNECT FIRE ALARM DEVICES TO EMERGENCY POWER SOURCE WHERE AVAILABLE.

14. PROVIDE AN ELECTRICAL RECEPTACLE WITHIN THE FIRE ALARM CONTROL PANEL.

15. PAINT FIRE ALARM SYSTEM JUNCTION BOX COVERS RED.

16. DUST CAPS TO BE PLACED ON SMOKE DETECTORS FROM CONSTRUCTION INITIATION UNTIL SYSTEM TESTING.

17. JUNCTION BOXES TO BE PLACED WITHIN 4'-0" OF THE DROPPED CEILING FOR EASE OF ACCESS.

18. MOUNT CONTROL MODULES WITH VISUAL INDICATORS FOR FLOW AND TAMPER SWITCHES FLUSH IN CEILING BETWEEN 24" AND 36" FROM THE SWITCH.

19. CONTRACTOR TO REVIEW WIRING AND PROGRAMMING REQUIREMENTS WITH MR. JEFF JEWETT AT MAC ELECTRIC AND MR. NATHAN KREYE AT THE MAC FIRE DEPT. PRIOR TO PERFORMING ANY WORK.

20. FIRE ALARM DEVICES SERVED FROM THE TRUNK SHALL CONNECT AT THE TRUNK LINE JUNCTION BOXES. DEVICE TO DEVICE (DAISY CHAINING OF DEVICES) CONDUIT SHALL NOT EXCEED 25'-0" RUNNING PARALLEL WITH THE TRUNK LINE.

21. THE CONTRACTOR SHALL BE RESPONSIBLE FOR MAINTAINING THE INTEGRITY OF THE EXISTING FIRE ALARM SYSTEM. WHEN WORK MUST BE PERFORMED ON THE SYSTEM DURING NORMAL OPERATION, THE CONTRACTOR SHALL NOTIFY THE MAC FIRE DEPT. THROUGH THE DISPATCH OFFICE (612-726-5577). REPORT DAILY TO DISPATCH AT THE START AND END OF THE WORKDAY. NOTIFY DISPATCH OF THE LOCATION OF THE WORK AND THE AFFECTED FIRE ALARM ACTIVATION AND NOTIFICATION CIRCUITS. IF WORK IS NOT COMPLETED AT THE END OF TEH DAY, PROVIDE A DETAILED LIST OF AREAS NOT COVERED BY THE FIRE ALARM SYSTEM OUTAGE. NOTIFY DISPATCH WHEN THE WORK IS FULLY COMPLETED WITH A SYSTEM FULLY FUNCTIONING AGAIN.

2.19 SUBSTITUTIONS.

ALL SUBSTITUTIONS SHALL BE SUBMITTED TO THE ENGINEER NO LESS THAN 5 DAYS PRIOR TO BID DATE. TO BE FAIR TO ALL BIDDING CONTRACTORS, SUBSTITUTIONS AFTER THE BID WILL NOT BE ALLOWED UNLESS DIRECTED IN WRITING BY THE SPECIFYING ENGINEER. ACCEPTABLE SUBSTITUTES SHALL BE AVAILABLE TO ALL BIDDING CONTRACTORS PRIOR TO THE BID DATE.

2.20 UNDERFLOOR RACEWAY.

A. COORDINATE LAYOUT AND INSTALLATION OF UNDERFLOOR RACEWAY PRODUCTS. COORDINATE EXPOSED COMPONENTS WITH FLOOR-COVERING MATERIALS TO ENSURE FITTINGS AND TRIM ARE SUITABLE FOR FLOOR-COVERING MATERIAL FURNISHED. REVISE LOCATIONS FROM THOSE INDICATED AS REQUIRED TO SUIT FIELD CONDITIONS AND ENSURE FUNCTIONING LAYOUT, AND AS APPROVED BY ARCHITECT.

B. SYSTEM DESCRIPTION: UNDER FLOOR RACEWAYS, GROUPED IN RUNS OF 2 EACH AND CAST IN CONCRETE FLOOR FOR POWER AND TELEPHONE/DATA. RACEWAYS TO BE PRE PUNCHED AT 24" ON CENTER. PROVIDE CONDUIT FEED END, COUPLING SLEEVES, AND END PLUGS TO PROVIDE A COMPLETE INSTALLATION. PROVIDE ATTACHING RING WITH MUD CAP FOR PRE-PUNCHED HOLES NOT USED. WIREMOLD #4 DUCT OR APPROVED EQUAL.

C. FITTINGS: PROVIDE FLUSH DEVICES AS SHOWN ON THE DRAWINGS. SERVICE FITTINGS TO BE FLUSH BRASS WITH FLIP LIDS FOR OUTLETS, AND TELEPHONE/DATA SLIDES. WIREMOLD SOURCE 1 OR 2 OR APPROVED EQUAL.

END OF ELECTRICAL SPECIFICATION.

CONSULTANT:

DUNHAM

DUNHAM
50 South Sixth Street / Suite 1100
Minneapolis, Minnesota 55402-1540
PHONE 612.465.7550
FAX 612.465.7551
WEB dunhameng.com
mechanical + electrical consulting engineering
Dunham Project No.: 0426995-132

CLIENT:

Alliance DEVELOPMENT

FRED JACQUES
ALLIANCE DEVELOPMENT
230 OHIO ST, SUITE 200
OSHKOSH, WI 54902
(612) 313-0126

PROJECT INFORMATION:

SOUTH LA CROSSE SHELL

MORMON COULEE RD & LOSEY BLVD S
LA CROSSE, WI 54601

NOT FOR CONSTRUCTION

01/09/2026

PROJECT NO.: 0425995-132
DRAWN BY: AZ
CHECKED BY: CM/RM

ISSUE:	DATE:
PERMIT SET	01/09/2026

REVISION:	DATE:

TITLE:

ELECTRICAL SPECIFICATIONS

SHEET NUMBER:

E4

© COPYRIGHT WILKUS ARCHITECTS

MECHANICAL ABBREVIATIONS

AD	AREA DRAIN	ISO	ISOLATION EXHAUST
A.F.F.	ABOVE FINISHED FLOOR	KW	KILOWATT
AFMS	AIR FLOW MEASURING STATION	LAT	LEAVING AIR TEMPERATURE
AHU	AIR HANDLING UNIT	LAV	LAVATORY
ANB	ACID NEUTRALIZING BASIN	LWT	LEAVING WATER TEMPERATURE
AP	ACCESS PANEL	MBH	BTU PER HOUR (THOUSANDS)
ARCH	ARCHITECT	MCF	THOUSAND CUBIC FEET
AS	AIR SEPARATOR	MH	MANHOLE
BD	BUTTERFLY DAMPER	NC	NOISE CRITERIA OR NORMALLY CLOSED
B/G	BELOW GRADE		
BTU	BRITISH THERMAL UNIT	NEG	NEGATIVE
BWV	BACKWATER VALVE	NIC	NOT IN CONTRACT
CCF	HUNDRED CUBIC FEET	NO	NORMALLY OPEN
CFH	CUBIC FEET PER HOUR	NTS	NOT TO SCALE
CFM	CUBIC FEET PER MINUTE	OA	OUTSIDE AIR
CL	CENTER LINE	OBD	OPPOSED BLADE DAMPER
CLG	CEILING	ORD	OVERFLOW ROOF DRAIN
CO	CLEAN OUT	PD	PRESSURE DROP OR DIFFERENCE
CONTR	CONTRACTOR	PE	PNEUMATIC-ELECTRIC
CONV	CONVECTOR	PLBG	PLUMBING
CUH	CABINET UNIT HEATER	PRV	PRESSURE REDUCING VALVE OR POWER ROOF VENTILATOR
CW	COLD WATER		
DB	DECIBEL	PSIA	POUNDS/SQ INCH ABSOLUTE
DF	DRINKING FOUNTAIN	PSIG	POUNDS/SQ INCH GAUGE
DIA	DIAMETER	PVC	POLY VINYL CHLORIDE
DIFF	DIFFUSER	RA	RETURN AIR
DISCH	DISCHARGE	RCP	REINFORCED CONCRETE PIPE
DMPR	DAMPER	RD	ROOF DRAIN
DN	DOWN	RECIRC	RECIRCULATING
DR	DRAIN	REG	REGISTER
DS	DOWNSPOUT	RET	RETURN
DWG	DRAWING	RH	RELATIVE HUMIDITY
EAT	ENTERING AIR TEMPERATURE	RHT	REHEAT
EDR	EQUIVALENT DIRECT RADIATION	RHC	REHEAT COIL
EP	ELECTRIC-PNEUMATIC	RHW	RECIRCULATED HOT WATER
EWC	ELECTRIC WATER COOLER	RLF	RELIEF
EWT	ENTERING WATER TEMPERATURE	RM	ROOM
EXH	EXHAUST	RPM	REVOLUTIONS PER MINUTE
EXP	EXPANSION	RPZ	REDUCED ZONE BACKFLOW PREVENTER
F	FAHRENHEIT		
FC	FAN COIL	SA	SUPPLY AIR
FCO	FLOOR CLEAN OUT	SAN	SANITARY
FD	FLOOR DRAIN	SCFM	CFM, STANDARD CONDITIONS
FHC	FIRE HOSE CABINET	SD	SMOKE DAMPER
FHR	FIRE HOSE RACK	SP	STATIC PRESSURE
FLR	FLOOR	SPECS	SPECIFICATIONS
FLEX	FLEXIBLE	SUP	SUPPLY
FM	FIRE MAIN	SQ	SQUARE
FPM	FEET PER MINUTE	STM	STEAM
FPS	FEET PER SECOND	TD	TEMPERATURE DIFFERENCE
FT	FEET OR FOOT	TEMP	TEMPERATURE
F&T	FLOAT AND THERMOSTATIC	TONS	TONS OF REFRIGERATION
FTG	FOOTING	T-STAT	THERMOSTAT
FTR	FINNED TUBE RADIATION	TYP	TYPICAL
FV	FACE VELOCITY	UB	UP-BLAST
GA	GAUGE	UG	UNDERGROUND
GAL	GALLON	UH	UNIT HEATER
GEXH	GREASE EXHAUST	UR	URINAL
GPH	GALLONS PER HOUR	V	SANITARY VENT
GPM	GALLONS PER MINUTE	VAV	VARIABLE AIR VOLUME
GR	GRILLE	VD	VOLUME DAMPER
HB	HOSE BIBB	VEL	VELOCITY
HD	HEAD	VFD	VARIABLE FREQUENCY DRIVE
HOA	HANDS-OFF-AUTOMATIC	VOL	VOLUME
HTG	HEATING	VTR	VENT THROUGH ROOF
HTR	HEATER	W	SANITARY WASTE
HVAC	HEATING, VENTILATION, AND AIR CONDITIONING	W/	WITH
		W/0	WITHOUT
HYD	HYDRANT	WC	WATER CLOSET
HW	HOT WATER	WCO	WALL CLEANOUT
GCO	GRADE CLEANOUT	WH	WALL HYDRANT
INSUL	INSULATION	WTR	WATER
INV	INVERT		

MECHANICAL SYMBOLS LEGEND

PLUMBING

- AV — ACID VENT BELOW GRADE
- AV — ACID VENT ABOVE GRADE
- AW — ACID WASTE BELOW GRADE
- AW — ACID WASTE ABOVE GRADE
- DI — DEIONIZED WATER
- CW — DOMESTIC COLD WATER
- CWV — CLEAR WATER VENT
- CWW — CLEAR WATER WASTE
- FW — FILTERED WATER
- GW — GREASE WASTE
- HW — DOMESTIC HOT WATER
- 140 — DOMESTIC HOT WATER (TEMP. INDICATED)
- 140 RHW — DOM. RECIRC. HOT WATER (TEMP. INDICATED)
- RHW — DOMESTIC RECIRC. HOT WATER
- HARD — HARD COLD WATER
- NPCW — NON-POTABLE COLD WATER
- NPHW — NON-POTABLE HOT WATER
- OSD — OVERFLOW STORM DRAIN BELOW GRADE
- OSD — OVERFLOW STORM DRAIN ABOVE GRADE
- RO — REVERSE OSMOSIS WATER
- V — SANITARY VENT BELOW GRADE
- V — SANITARY VENT ABOVE GRADE
- W — SANITARY WASTE
- SS — SANITARY SEWER
- SDT — SOIL DRAINAGE TILE
- SOFT — SOFTENED COLD WATER
- SHW — SOFTENED HOT WATER
- TW — TEMPERED WATER
- SD — STORM DRAIN BELOW GRADE
- SD — STORM DRAIN ABOVE GRADE
- WW — WELL WATER
- EXISTING PLUMBING TO REMAIN
- EXISTING PLUMBING TO BE REMOVED

MECHANICAL PIPING

- BF — BOILER FEED
- CWS — CHILLED WATER SUPPLY
- CWR — CHILLED WATER RETURN
- 10#A — COMPRESSED AIR (PSI INDICATED)
- CD — CONDENSATE DRAIN
- CS — CONDENSER WATER SUPPLY
- CR — CONDENSER WATER RETURN
- FOS — FUEL OIL SUPPLY
- FOR — FUEL OIL RETURN
- FOV — FUEL OIL VENT
- FOF — FUEL OIL FILL
- GS — GLYCOL SUPPLY
- GR — GLYCOL RETURN
- HRS — HEAT RECOVERY SUPPLY
- HRR — HEAT RECOVERY RETURN
- HWS — HEATING WATER SUPPLY
- HWR — HEATING WATER RETURN
- IG — INTERRUPTIBLE GAS
- LV — LABORATORY VACUUM
- LA — LABORATORY AIR
- LPG — LIQUIFIED PETROLEUM GAS
- 2#G — NATURAL GAS (PSI INDICATED)
- PV — PLANT VACUUM
- PC — PUMPED CONDENSATE
- RADS — RADIATION WATER SUPPLY
- RADR — RADIATION WATER RETURN
- RL — REFRIGERANT LIQUID
- RS — REFRIGERANT SUCTION
- RHG — REFRIGERANT HOT GAS BYPASS
- RHS — REHEAT WATER SUPPLY
- RHR — REHEAT WATER RETURN
- RRS — REMOTE RADIATOR SUPPLY
- RRR — REMOTE RADIATOR RETURN
- SHWS — SECONDARY HEATING WATER SUPPLY
- SHWR — SECONDARY HEATING WATER RETURN
- SMS — SNOW MELT SUPPLY
- SMR — SNOW MELT RETURN
- 10#STM — STEAM SUPPLY (PSI INDICATED)
- 10#R — STEAM RETURN (PSI INDICATED)
- EXISTING PIPING TO REMAIN
- EXISTING PIPING TO BE REMOVED

PLUMBING /PIPING

- ELBOW DOWN
- PIPE CAP
- ELBOW UP
- TEE, OUTLET UP
- TEE, OUTLET DOWN
- CONNECTION, BOTTOM
- CONNECTION, TOP
- ECCENTRIC REDUCER
- CONCENTRIC REDUCER
- FLEXIBLE CONNECTION
- EXPANSION JOINT
- PIPE ANCHOR
- ALIGNMENT GUIDE
- CHECK VALVE
- SHUTOFF VALVE
- PLUG VALVE
- COMBINATION BALANCE VALVE AND FLOW METER
- STRAINER
- STRAINER W/BLOWDOWN CAP AND VALVE
- PRESSURE REDUCING VALVE (SETTING AS NOTED, PSI)
- AUTOMATIC CONTROL VALVE, 2-WAY
- AUTOMATIC CONTROL VALVE, 3-WAY
- AUTOMATIC AIR VENT MANUAL AIR VENT
- PRESSURE RELIEF/SAFETY VALVES(SETTING AS NOTED, PSI)
- DRAIN VALVE
- BALL VALVE
- BUTTERFLY VALVE
- DIAPHRAGM
- GLOBE ANGLE VALVE
- 0. S.& Y. VALVE
- REDUCED PRESSURE ZONE BACK FLOW PREVENTER
- SOLENOID VALVE
- FLOW LIMITING VALVE
- REFRIGERANT SIGHT GLASS
- GLOBE VALVE
- GAS PRESSURE REGULATOR VALVE
- BACKWATER VALVE
- REFRIGERANT DRYER
- FLOW DIRECTION
- FLOW DIRECTION W/PITCH
- DUPLEX STRAINER
- PIPE UNION
- PIPE FLANGE
- PUMP
- PRESSURE GAUGE W/PIGTAIL & PETCOCK
- THERMOMETER
- PRESSURE/TEMPERATURE TEST PORT
- STEAM TRAP (TYPE INDICATED)
- FLOW MEASURING STATION (FLOW INDICATED)
- FLOW SWITCH
- PRESSURE SWITCH
- SHOCK ABSORBER
- GAS COCK VALVE
- ELBOW
- TEE
- FLOOR DRAIN
- FLOOR SINK
- WALL HYDRANT
- HOSE BIBB
- CLEANOUT
- WALL CLEANOUT
- ROOF DRAIN
- DRAIN ABOVE
- CATCH BASIN
- MANHOLE

DUCTWORK

- SUPPLY AIR
- RETURN AIR
- EXHAUST AIR
- STANDARD BRANCH, NO SPLITTER - SUPPLY FLOW TO RIGHT - RETURN/EXHAUST FLOW TO LEFT
- BELLMOUTH WITH BALANCING DAMPER
- FLEXIBLE DUCT
- TURNING VANES
- FLEXIBLE CONNECTION
- MANUAL VOLUME DAMPER
- MOTORIZED DAMPER
- FIRE DAMPER & ACCESS PANEL (HORIZONTAL FD, VERTICAL FD)
- SMOKE DAMPER & ACCESS PANEL (HORIZONTAL SD, VERTICAL SD)
- COMBINATION FIRE/SMOKE DAMPER & ACCESS PANEL (HORIZONTAL FSD, VERTICAL FSD)
- SUPPLY GRILLE OR REGISTER
- RETURN OR EXHAUST GRILLE OR REGISTER
- SUPPLY DUCT UP, POSITIVE PRESSURE
- RETURN DUCT UP, NEGATIVE PRESSURE
- EXHAUST DUCT UP, NEGATIVE PRESSURE
- SUPPLY DUCT DN, POSITIVE PRESSURE
- RETURN DUCT DN, NEGATIVE PRESSURE
- EXHAUST DUCT DN, NEGATIVE PRESSURE
- SUPPLY DIFFUSER/REGISTER BLANKOFF INDICATED
- RETURN GRILLE/REGISTER
- EXHAUST GRILLE/REGISTER
- LINEAR DIFFUSER
- CONCENTRIC DUCT TRANSITION
- ECCENTRIC DUCT TRANSITION
- RECTANGULAR-TO-ROUND DUCT TRANSITION
- VAV BOX
- VAV BOX W/REHEAT COIL
- REHEAT COIL
- DUCT OFFSETS (RISE, DROP)
- DUCT CUTLINE

CONTROLS

- TAMPERPROOF THERMOSTAT
- ROOM PRESSURE MONITOR
- AQUA STAT
- THERMOSTAT W/GUARD
- CARBON MONOXIDE SENSOR
- HUMIDISTAT OR R.H. SENSOR
- REFRIGERANT SENSOR
- SMOKE DETECTOR
- SPACE TEMPERATURE SENSOR
- STATIC PRESSURE SENSOR
- THERMOSTAT
- CARBON DIOXIDE SENSOR

ANNOTATION

- GRILLE, REGISTER, & DIFFUSER IDENTIFICATION: QUANTITY, TYPE, SIZE, CFM (e.g. (4)A-12"Ø, 450)
- HYDRONIC FINNED TUBE RADIATION & RADIANT PANEL IDENTIFICATION: TYPE FTR/RP 01, 6'-5", GPM 0.5 — ACTIVE ELEMENT LENGTH
- ELECTRIC BASEBOARD RADIATION IDENTIFICATION: TYPE EBR 01, 6'-5" — ACTIVE ELEMENT LENGTH
- DETAIL NUMBER / SHEET NUMBER
- SECTION NUMBER / SHEET NUMBER
- EQUIP DESIGNATION / EQUIP NUMBER
- POINT OF CONNECTION, NEW TO EXISTING
- POINT OF DISCONNECTION

MEDICAL GAS

- MV — MEDICAL VACUUM
- WAGD — WASTE ANESTHETIC GAS DISPOSAL
- CO2 — CARBON DIOXIDE
- O — OXYGEN
- N — NITROGEN
- N2O — NITROUS OXIDE
- MA — MEDICAL AIR
- IA — INSTRUMENT AIR
- ZVB — ZONE VALVE BOX
- AAP — AREA ALARM PANEL
- MAP — MASTER ALARM PANEL
- CAP — COMBINATION AREA/MASTER ALARM PANEL

PROCESS AND LABORATORY

- LA — LABORATORY AIR
- LV — LABORATORY VACUUM
- CDA — CLEAN DRY AIR
- RO — REVERSE OSMOSIS
- DI — DEIONIZED WATER
- N — NITROGEN
- HV — HOUSE VACUUM
- PV — PLANT VACUUM
- AV — ACID VENT
- AW — ACID WASTE

FIRE PROTECTION

- F — FIRE PROTECTION
- DFP — FIRE PROTECTION (DRY SYSTEM)
- POST INDICATOR VALVE (PIV)
- FIRE HYDRANT WITH SHUTOFF VALVE
- FDVC — RECESSED FIRE DEPT CABINET
- FDVC — SURFACE MOUNTED FIRE DEPT CABINET
- FIRE PROTECTION RISER
- UPRIGHT SPRINKLER HEAD W/GUARD
- PENDANT SPRINKLER HEAD
- UPRIGHT SPRINKLER HEAD
- SIDEWALL SPRINKLER HEAD
- TS — BUTTERFLY VALVE W/TAMPER SWITCH
- DETECTOR CHECK W/BYPASS METER
- GRADE FIRE DEPT CONNECTION
- FLUSH FIRE DEPT CONNECTION
- FDV — FIRE DEPT VALVE W/CAP AND CHAIN
- TS — O.S. & Y. VALVE W/TAMPER SWITCH
- DRY PIPE VALVE
- PREACTION VALVE

GENERAL DUTY VALVES

- BALL VALVE (OR)
- BUTTERFLY VALVE (OR, OR)
- CHECK VALVE
- FLOW LIMITING VALVE
- GATE VALVE
- GLOBE ANGLE VALVE
- GLOBE VALVE (OR)
- O. S. & Y. VALVE (OR)
- PLUG VALVE
- SHUTOFF VALVE
- SOLENOID VALVE

MECHANICAL SHEET LIST

SHEET NUMBER	SHEET NAME
M0	MECHANICAL TITLE SHEET
M1	MECHANICAL PLAN
P1	PLUMBING PLAN
P2	PLUMBING SPECIFICATIONS

SHEET TOTAL: 4

CONSULTANT:

DUNHAM

DUNHAM
50 South Sixth Street / Suite 1100
Minneapolis, Minnesota 55402-1540
PHONE 612.465.7550
FAX 612.465.7551
WEB dunhameng.com
mechanical + electrical consulting engineering
Dunham Project No.: 0426995-132

CLIENT:

Alliance DEVELOPMENT

FRED JACQUES
ALLIANCE DEVELOPMENT
230 OHIO ST, SUITE 200
OSHKOSH, WI 54902
(612) 313-0126

PROJECT INFORMATION:

SOUTH LA CROSSE SHELL

MORMON COULEE RD & LOSEY BLVD S
LA CROSSE, WI 54601

NOT FOR CONSTRUCTION

01/09/2026

PROJECT NO.: 0425995-132
DRAWN BY: TSB
CHECKED BY: GMS

ISSUE:	DATE:
PERMIT SET	01/09/2026

REVISION:	DATE:

TITLE:
MECHANICAL TITLE SHEET

SHEET NUMBER:
M0

© COPYRIGHT WILKUS ARCHITECTS

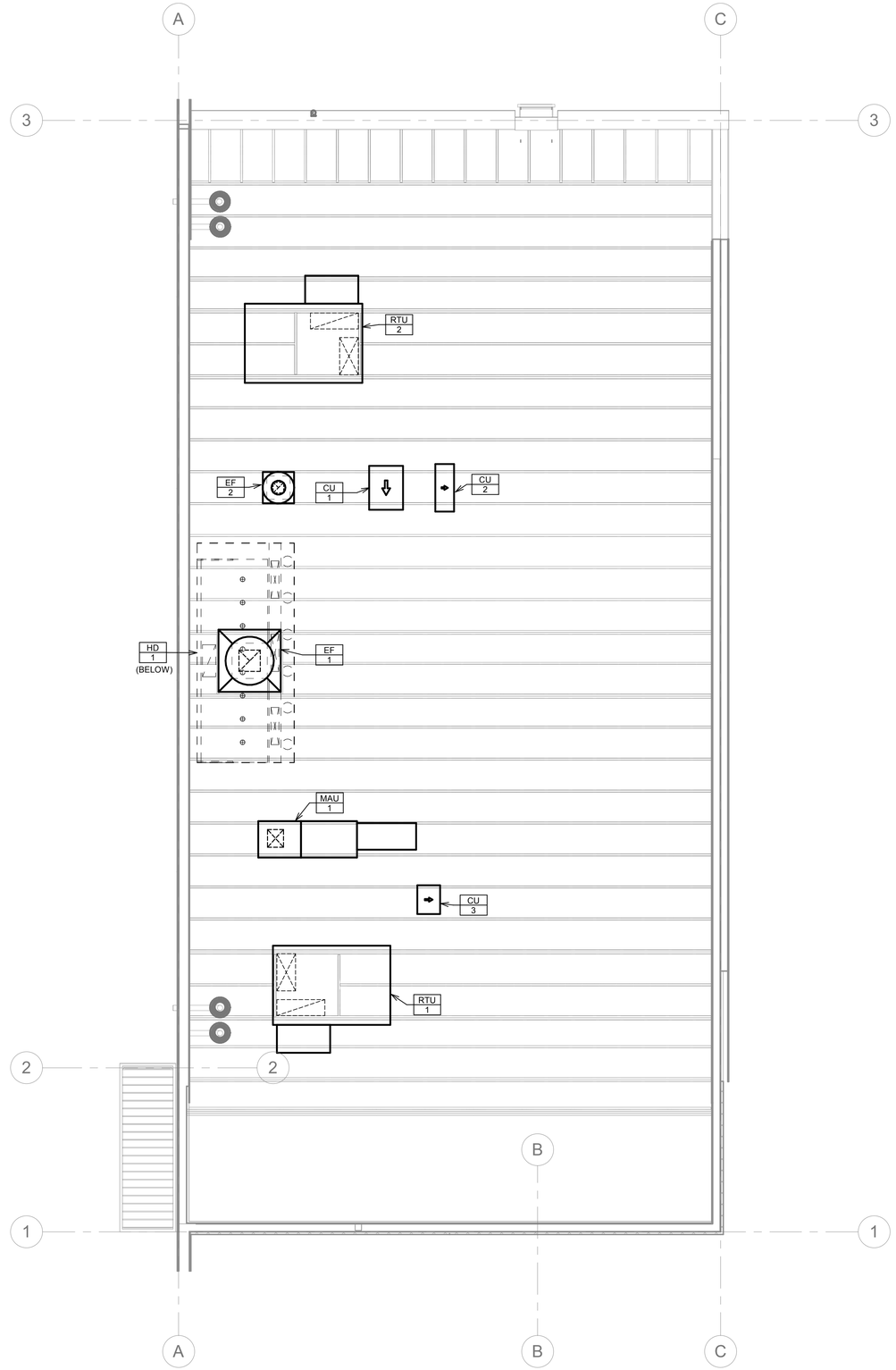

1 MECHANICAL PLAN
1/4" = 1'-0"

GENERAL NOTES:

A. EQUIPMENT LOCATIONS ARE SHOWN IN ORDER TO FACILITATE THE DEVELOPMENT OF STRUCTURAL PLANS. ALL MECHANICAL EQUIPMENT SHOWN IS BY TENANT.

CHIPOTLE MECHANICAL EQUIPMENT SCHEDULE

Mark	Description	Weight (lbs)
CU 1	CONDENSING UNIT - WALK-IN COOLER	300
CU 2	REMOTE CONDENSER - LOW CAPACITY ICE MAKER	100
CU 3	REMOTE CONDENSER - SODA MACHINE ICE MAKER	100
EF 1	EXHAUST - FAN HOOD	400
EF 2	EXHAUST FAN - RESTROOM	100
HD 1	KITCHEN HOOD (TYPE 1) WITH PLENUMS	1400
MAU 1	DIRECT-FIRED MAKE UP AIR UNIT	800
RTU 1	ROOF TOP UNIT - KITCHEN	2500
RTU 2	ROOF TOP UNIT - DINING	2500

CONSULTANT:

DUNHAM

DUNHAM
50 South Sixth Street / Suite 1100
Minneapolis, Minnesota 55402-1540
PHONE 612.465.7550
FAX 612.465.7551
WEB dunhameng.com
mechanical + electrical
consulting engineering
Dunham Project No.: 0426995-132

CLIENT:

FRED JACQUES
ALLIANCE DEVELOPMENT
230 OHIO ST, SUITE 200
OSHKOSH, WI 54902
(612) 313-0126

PROJECT INFORMATION:

SOUTH LA CROSSE SHELL

MORMON COULEE RD & LOSEY BLVD S
LA CROSSE, WI 54601

NOT FOR CONSTRUCTION

01/09/2026

PROJECT NO.: 0425995-132
DRAWN BY: TSB
CHECKED BY: GMS

ISSUE:	DATE:
PERMIT SET	01/09/2026

REVISION:	DATE:

TITLE:
MECHANICAL PLAN

SHEET NUMBER:
M1

© COPYRIGHT WILKUS ARCHITECTS

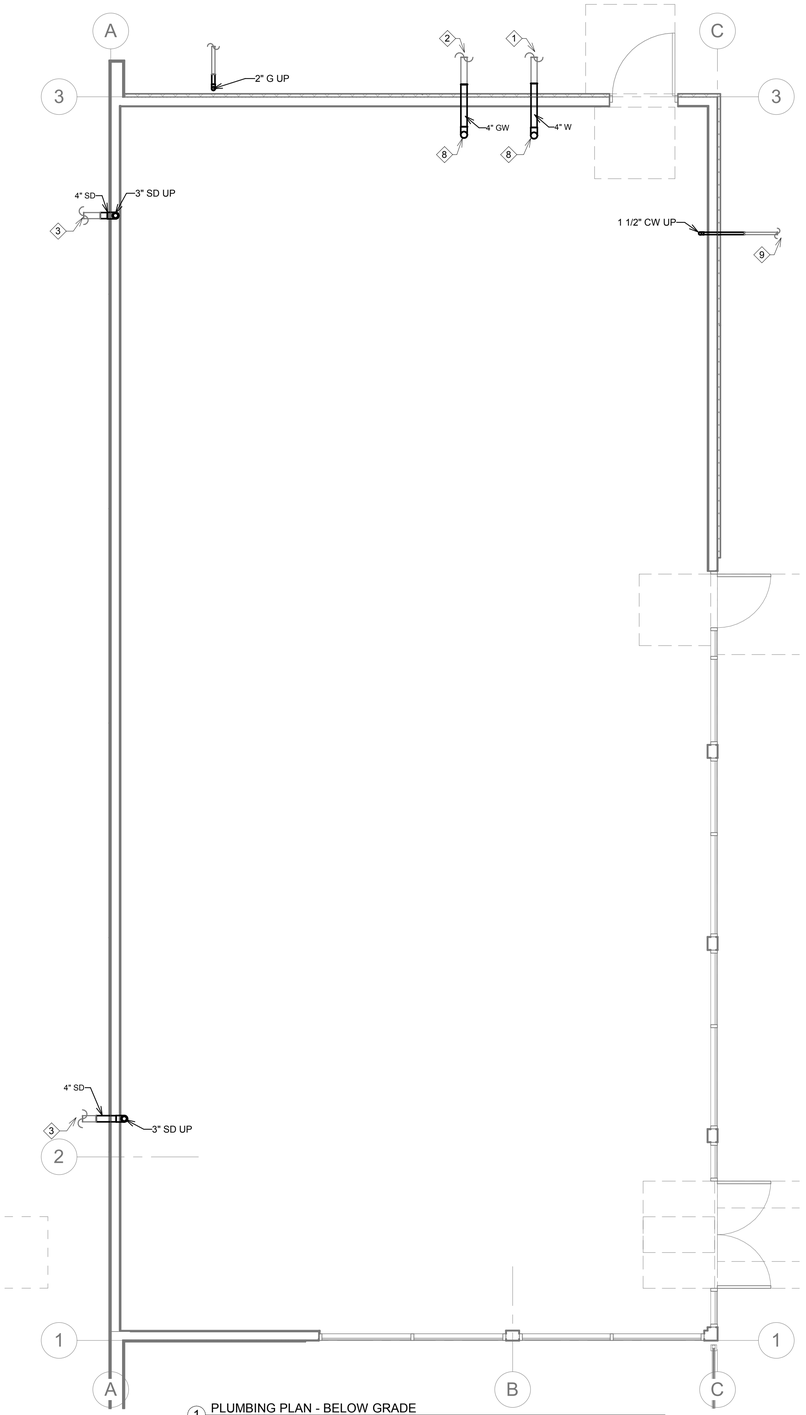

1 PLUMBING PLAN - BELOW GRADE
1/4" = 1'-0"

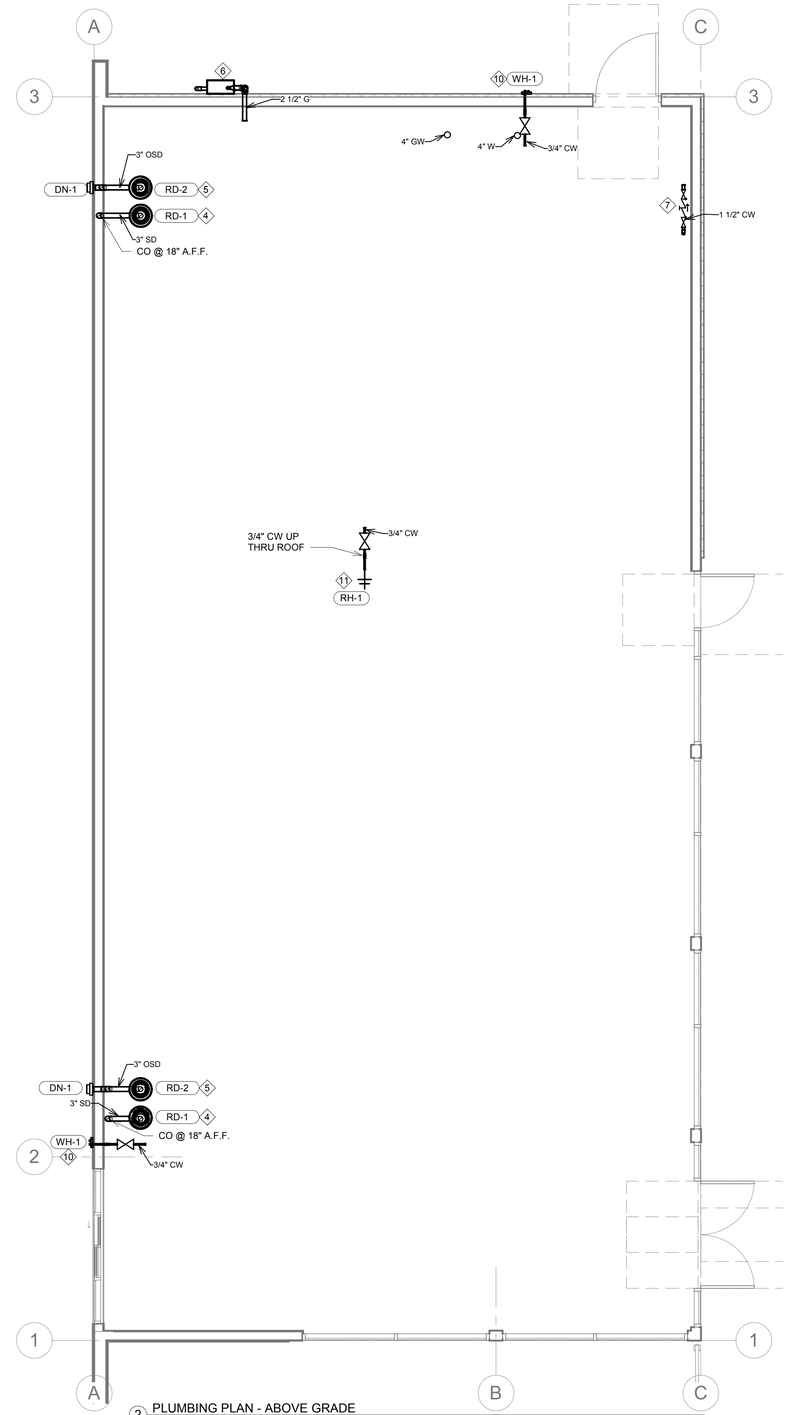

2 PLUMBING PLAN - ABOVE GRADE
1/4" = 1'-0"

GENERAL NOTES:

A. CONTRACTOR SHALL VISIT THE JOB SITE AND FAMILIARIZE THEMSELVES WITH ALL REQUIREMENTS OF THE PROJECT AND NOTIFY THE ENGINEER IMMEDIATELY OF ANY DISCREPANCIES FOUND. THIS SHALL BE DONE PRIOR TO BID TO PREVENT UNKNOWN ADDITIONAL COSTS TO THE OWNER.

B. THE WORK SHALL BE EXECUTED IN STRICT CONFORMITY WITH BASE BUILDING SPECIFICATION AND WITH THE LATEST EDITION OF THE PREVAILING STATE PLUMBING AND BUILDING CODES AND ALL LOCAL REGULATIONS THAT MAY APPLY. IN CASE OF CONFLICT BETWEEN THE CONTRACT DOCUMENTS AND A GOVERNING CODE OR ORDINANCE THE MORE STRINGENT STANDARD SHALL APPLY.

C. ALL PLUMBING WORK SHALL BE COORDINATED WITH ALL OTHER TRADES BEFORE PROCEEDING WITH INSTALLATION.

D. REFER TO THE ARCHITECTURAL DRAWINGS FOR WALL ELEVATIONS FOR MOUNTING HEIGHTS FOR ALL PLUMBING FIXTURES.

E. ALL SHUTOFF VALVES SHALL BE ACCESSIBLE. DO NOT LOCATE ANY VALVES ABOVE DUCTWORK, ELECTRICAL CONDUIT, CABLE TRAYS OR PIPING THAT WOULD MAKE THE VALVES INACCESSIBLE OR UNABLE TO VISUALLY SEE THE VALVES LOCATION. LOCATE THE BRANCH SHUTOFF VALVES AS CLOSE AS POSSIBLE TO THE BRANCH CONNECTION TO THE MAIN SERVICE WHILE MAINTAINING THE VALVE ACCESSIBILITY. ABOVE CEILING VALVES TO BE LOCATED NEAR CEILING ACCESS PANELS.

F. THE PLUMBING CONTRACTOR TO PROVIDE ALL PIPING, SINK TAILPIECES, SINK DRAIN FITTINGS, AND ALL OTHER MISC FITTINGS AS REQUIRED.

G. PROVIDE ADDITIONAL FLOOR CLEANOUTS OR WALL CLEANOUTS AS DIRECTED BY THE ADMINISTRATIVE AUTHORITY.

H. INSTALL BALL VALVES ON ALL BRANCH SUPPLY LINES.

KEY NOTES:

1. SEE SHEET C4.0, CIVIL UTILITY PLAN FOR CONTINUATION OF 4" SANITARY SEWER. REFER TO CIVIL UTILITY PLANS FOR INVERT ELEVATION.
2. SEE SHEET C4.0, CIVIL UTILITY PLAN FOR CONTINUATION OF 4" GREASE WASTE. REFER TO CIVIL UTILITY PLANS FOR INVERT ELEVATION.
3. SEE SHEET C4.0, CIVIL UTILITY PLAN FOR CONTINUATION OF 4" STORM SEWER. REFER TO CIVIL UTILITY PLANS FOR INVERT ELEVATION.
4. PROVIDE 3" STORM DRAIN CONDUCTOR FROM PRIMARY ROOF DRAIN RD-1 DOWN IN WALL TO 4" STORM DRAIN BELOW GRADE. INTERIOR HORIZONTAL STORM DRAIN CONDUCTORS SHALL BE SLOPED AT A MINIMUM OF 1/2" PER FOOT.
5. PROVIDE 3" STORM DRAIN CONDUCTOR FROM SECONDARY ROOF DRAIN RD-2 TO DOWNSPOUT NOZZLE DN-1 MOUNTED AT 12" AFG. INTERIOR HORIZONTAL STORM DRAIN CONDUCTORS SHALL BE SLOPED A MINIMUM OF 1/2" PER FOOT.
6. PROVIDE NEW GAS METER. SEE CIVIL UTILITY PLAN FOR ON-SITE GAS ROUTING. GAS METER SHALL HAVE A MINIMUM CAPACITY OF 1600 CFH.
7. PROVIDE WATER SERVICE ENTRY PER DETAIL 3/P1.
8. EXTEND PIPE UP TO 2'-0" A.F.F. AND CAP.
9. SEE CIVIL UTILITY PLAN FOR CONTINUATION OF 1-1/2" DOMESTIC WATER - COORDINATE DEPTH WITH CIVIL PLAN.
10. PROVIDE FREEZELESS WALL HYDRANT WITH SHUT OFF VALVE. EXTEND PIPE INTO CEILING SPACE AND CAP.
11. PROVIDE FREEZELESS ROOF HYDRANT WITH SHUT OFF VALVE. EXTEND PIPE INTO CEILING SPACE AND CAP.

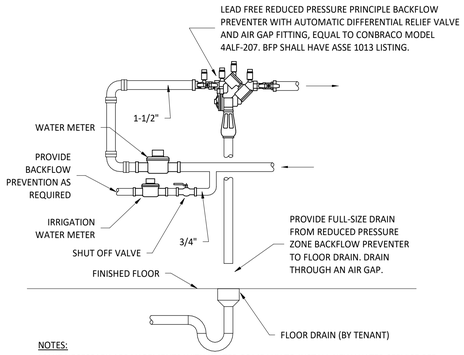

NOTES:
MAKE NECESSARY ARRANGEMENTS WITH WATER COMPANY TO INSTALL NEW WATER SERVICE PER LOCAL CODES & WATER COMPANY REGULATIONS AND PAY ALL CHARGES. SERVICE SHALL BE SIZED PER THE PLUMBING PLAN & INSTALLED IN STRICT ACCORDANCE OF WATER COMPANY REGULATIONS. ANCHOR METER, BACKFLOW PREVENTER, AND PIPING TO THE WALL OR THE FLOOR. CERTIFY THE BACKFLOW PREVENTER PER THE WATER COMPANY'S REQUIREMENTS.

3 WATER SERVICE ENTRY DETAIL
NO SCALE

STORM DRAINAGE CALCULATION

BASED ON WI PLUMBING CODE SECTION 382.36 (5) METHOD #1: "AREA METHOD"

TOTAL ROOF AREA = 2309FT²
PEAK FLOW CALCULATED BY 26FT² PER GPM
2309/26 = 88.8GPM
(2) DRAINS
88.8/2 = 44.4GPM EACH

USING TABLE 382.36-1 "MAXIMUM CAPACITY OF STORMWATER CONVEYANCE PIPING FOR PVC, ASTM D2665"

3" PIPE AT A SLOPE OF 1/8" PER FOOT HAS A CAPACITY OF 60 GPM.
PROPOSED PEAK DRAINAGE PER DRAIN: 44.4GPM

PLUMBING FIXTURE SCHEDULE

FIXTURE TAG	FIXTURE DESCRIPTION	MOUNTING	FIXTURE	WASTE (IN)	VENT (IN)	CW (IN)	HW (IN)	MECHANICAL NOTES
DN-1	DOWNSPOUT NOZZLE	ROOF	WATTS RD-940	3				NICKEL BRONZE DOWNSPOUT NOZZLE WITH ANCHOR FLANGE
RD-1	ROOF DRAIN (PRIMARY)	ROOF	WATTS RD-103	3				EPOXY COATED CAST IRON ROOF DRAIN WITH FLASHING CLAMP WITH INTEGRAL GRAVEL STOP, SELF-LOCKING POLYETHYLENE DOME, AND NO HUB OUTLET.
RD-2	ROOF DRAIN (OVERFLOW)	ROOF	WATTS RD-103-W	3				EPOXY COATED CAST IRON OVERFLOW ROOF DRAIN WITH FLASHING CLAMP WITH INTEGRAL 4 IN.(102MM) HIGH INTERNAL STANDPIPE, SELF LOCKING POLYTHYLENE DOME, AND NO HUB OUTLET.
RH-1	WALL HYDRANT	WALL	WOODFORD MODEL 65			3/4"		AUTOMATIC DRAINING, FREEZELESS WALL HYDRANT WITH ANTI-SIPHON VACUUM BREAKER.PROVIDE WITH STEM LONG ENOUGH TO REACH INSIDE THE THERMAL ENVELOPE OF THE BUILDING
WH-1	FREEZE PROOF ROOF HYDRANT	WALL	WOODFORD MODEL SRH-MS			3/4"		AUTOMATIC DRAINING, FREEZELESS ROOF HYDRANT WITH ANTI-SIPHON VACUUM BREAKER. HYDRANT SHALL HAVE ASSE 1057 LISTING

© COPYRIGHT WILKUS ARCHITECTS

CONSULTANT:
DUNHAM
DUNHAM
50 South Sixth Street / Suite 1100
Minneapolis, Minnesota 55402-1540
PHONE 612.465.7550
FAX 612.465.7551
WEB dunhameng.com
mechanical + electrical
consulting engineering
Dunham Project No.: 0426995-132

CLIENT:
Alliance DEVELOPMENT
FRED JACQUES
ALLIANCE DEVELOPMENT
230 OHIO ST, SUITE 200
OSHKOSH, WI 54902
(612) 313-0126

PROJECT INFORMATION:

SOUTH LA CROSSE SHELL
MORMON COULEE RD & LOSEY BLVD S
LA CROSSE, WI 54601

NOT FOR CONSTRUCTION
01/09/2026

PROJECT NO.: 0425995-132
DRAWN BY: TSB
CHECKED BY: GMS

ISSUE:	DATE:
PERMIT SET	01/09/2026

REVISION:	DATE:

TITLE:
PLUMBING PLAN

SHEET NUMBER:
P1

DIVISION 15000 - MECHANICAL

SECTION 15001 - BASIC MECHANICAL REQUIREMENTS
GENERAL CONDITIONS
1. DRAWINGS AND GENERAL PROVISIONS OF CONTRACT, INCLUDING GENERAL AND SUPPLEMENTARY CONDITIONS AND ALL OTHER SPECIFICATION SECTIONS, APPLY TO THIS AND THE OTHER SECTIONS OF DIVISION 15000.
2. THE CONTRACTOR FOR THIS DIVISION OF WORK IS REQUIRED TO READ THE SPECIFICATIONS AND REVIEW DRAWINGS FOR ALL DIVISIONS OF WORK AND IS RESPONSIBLE FOR THE COORDINATION OF THEIR WORK AND THE WORK OF THEIR SUBCONTRACTORS WITH ALL DIVISIONS OF WORK. IT IS THIS CONTRACTOR'S RESPONSIBILITY TO PROVIDE THEIR SUBCONTRACTORS WITH A COMPLETE SET OF BID DOCUMENTS.
3. THIS CONTRACTOR IS RESPONSIBLE FOR SCHEDULING THE COMPLETION AND INSPECTION OF THEIR WORK AND THE WORK OF THEIR SUBCONTRACTORS TO COMPLY WITH THE SCHEDULE AND THE PROJECT COMPLETION DATE.
4. THIS CONTRACTOR SHALL VISIT THE SITE PRIOR TO SUBMITTAL OF BID TO DETERMINE CONDITIONS AFFECTING THE WORK. ANY ITEMS WHICH ARE NOT COVERED IN THE BID DOCUMENTS OR ANY PROPOSED SUBSTITUTIONS SHALL BE LISTED SEPARATELY AND QUALIFIED IN THE CONTRACTOR'S BID. SUBMITTAL OF BID SHALL SERVE AS EVIDENCE OF KNOWLEDGE OF EXISTING CONDITIONS AND ANY MODIFICATIONS WHICH ARE REQUIRED TO MEET THE INTENT OF THE DRAWINGS AND SPECIFICATIONS. FAILURE TO VISIT THE SITE DOES NOT RELIEVE THE CONTRACTOR OF RESPONSIBILITY IN PERFORMANCE OF WORK.
5. REFER TO RESPONSIBILITY SCHEDULE FOR INFORMATION IN REGARD TO RESPONSIBILITY OF WORK OR ITEMS WHICH MAY AFFECT BID.

SECTION 15002 - GENERAL REQUIREMENTS
1. THIS CONTRACTOR SHALL PROVIDE ALL LABOR, MATERIALS, EQUIPMENT, SERVICES, TOOLS, TRANSPORTATION, INCIDENTALS AND DETAILS NECESSARY TO PROVIDE A COMPLETE MECHANICAL SYSTEM AS SHOWN ON THE DRAWINGS, CALLED FOR IN THE SPECIFICATIONS, AND AS REQUIRED BY JOB CONDITIONS. ALL WORK NOT SPECIFICALLY NOTED AS BEING BY THE LANDLORD OR TENANT SHALL BE PROVIDED BY THE MECHANICAL CONTRACTOR. CLOSELY COORDINATE THE ENTIRE INSTALLATION WITH THE LANDLORD AND THE TENANT PROJECT MANAGER, AS REQUIRED.
2. DRAWINGS AND SPECIFICATIONS ARE TO BE CONSIDERED AS SUPPLEMENTING EACH OTHER. WORK SPECIFIED BUT NOT SHOWN ON DRAWINGS, OR SHOWN ON DRAWINGS BUT NOT SPECIFIED, SHALL BE PERFORMED OR FURNISHED AS THOUGH MENTIONED IN BOTH SPECIFICATIONS AND DRAWINGS. IF NOT OTHERWISE DIRECTED, INSTALLATION OF ALL SYSTEMS AND EQUIPMENT SHALL BE IN ACCORDANCE WITH APPLICABLE CODES AND IN ACCORDANCE WITH MANUFACTURER'S INSTALLATION INSTRUCTIONS. WHERE WORK DESCRIBED IN THE SPECIFICATIONS IS IN CONFLICT WITH THE WORK SHOWN ON THE DRAWINGS, THE CONTRACTOR SHALL SUPPLY THE GREATER QUANTITY, QUALITY AND COST VIA THE BID AND CONTACT THE ENGINEER FOR CLARIFICATION ON DIRECTION PRIOR TO INSTALLATION.
3. WHERE THE DRAWINGS OR SPECIFICATIONS CALL FOR ITEMS WHICH EXCEED CODES OR THE LANDLORD'S TENANT CRITERIA, THE CONTRACTOR IS RESPONSIBLE FOR FURNISHING AND INSTALLING THE SYSTEM WITH THE MORE STRINGENT REQUIREMENTS AS DESIGNED AND DESCRIBED ON THESE DRAWINGS, UNLESS SPECIFICALLY NOTED OTHERWISE.
4. ALL MECHANICAL WORK SHALL BE INSTALLED SO AS TO BE READILY ACCESSIBLE FOR OPERATING, SERVICING, MAINTAINING, AND REPAIRING. THIS CONTRACTOR IS RESPONSIBLE FOR PROVIDING ACCESS PANELS FOR SUFFICIENT SERVICE ACCESS TO ALL EQUIPMENT.
5. ALL WORK SHALL BE PERFORMED IN A NEAT PROFESSIONAL MANNER USING GOOD ENGINEERING AND CONSTRUCTION PRACTICES.
6. UNLESS SPECIFICALLY NOTED OTHERWISE. MATERIALS, PRODUCTS, AND EQUIPMENT, INCLUDING ALL COMPONENTS THEREOF, SHALL BE NEW. UNDERWRITERS LABORATORIES LISTED AND LABELED AND SIZED IN CONFORMITY WITH REQUIREMENTS OF STATE AND LOCAL CODES, WHICHEVER IS MORE STRINGENT.

SECTION 15003 - CODES
1. ALL WORK SHALL CONFORM TO THE LANDLORDS' CRITERIA, THE STATE'S, COUNTY'S, CITY'S AND LOCAL CODES AND ORDINANCES, SAFETY AND HEALTH CODES, NFPA CODES, ENERGY CODES AND ALL OTHER APPLICABLE CODES AND REQUIREMENTS. THIS CONTRACTOR SHALL INQUIRE INTO AND COMPLY WITH ALL APPLICABLE CODES, ORDINANCES, AND REGULATIONS. THIS CONTRACTOR SHALL INCLUDE ANY CHANGES REQUIRED BY CODES IN THE BID AND IF THESE CHANGES ARE NOT INCLUDED IN THE BID, THEY MUST BE QUALIFIED AS A SEPARATE LINE ITEM IN THE BID. AFTER CONTRACT IS ISSUED, NO ADDITIONAL COST DUE TO CODE ISSUES SHALL BE REIMBURSED BY TENANT TO THE CONTRACTOR.

SECTION 15004 - LICENSES, PERMITS, INSPECTIONS & FEES
1. THIS CONTRACTOR SHALL OBTAIN AND PAY FOR ALL LICENSES, PERMITS, INSPECTIONS, AND FEES REQUIRED OR RELATED TO THEIR WORK.
2. FURNISH TO TENANT'S PROJECT MANAGER ALL CERTIFICATES OF INSPECTION AND FINAL INSPECTION APPROVAL AT COMPLETION OF PROJECT.

SECTION 15005 - TRADE NAMES, MANUFACTURERS AND SHOP DRAWINGS
1. WHERE TRADE NAMES AND MANUFACTURERS ARE USED ON THE DRAWINGS OR IN THE SPECIFICATIONS, THE EXACT EQUIPMENT SHALL BE USED AS A MINIMUM FOR THE BASE BID. MANUFACTURERS CONSIDERED AS AN EQUAL OR BETTER IN ALL ASPECTS TO THAT SPECIFIED WILL BE SUBJECT TO APPROVAL IN WRITING BY TENANT'S PROJECT MANAGER THROUGH PRIOR SHOP DRAWING SUBMITTAL PROCESS, FOR ACCEPTANCE. THE USE OF ANY UNAUTHORIZED EQUIPMENT SHALL BE SUBJECT TO REMOVAL AND REPLACEMENT AT THE CONTRACTOR'S EXPENSE.
2. MECHANICAL CONTRACTOR SHALL SUBMIT ONLY SUBSTITUTION REQUESTS TO TENANT'S PROJECT MANAGER FOR APPROVAL. SUBMISSIONS SHALL BE MADE EARLY ENOUGH IN PROJECT TO ALLOW FOUR (4) WORKING DAYS FOR TENANT'S PROJECT MANAGER'S REVIEW WITHOUT CAUSING DELAYS OR CONFLICTS TO THE JOB'S PROGRESS. SUBMITTALS SHALL BEAR THE STAMP OF GENERAL CONTRACTOR AND THE SUB-CONTRACTOR SHOWING THAT THEY HAVE REVIEWED AND CONFIRMED THAT THE SUBMITTALS ARE IN CONFORMANCE WITH THE CONTRACT DRAWINGS AND SPECIFICATIONS OR INDICATE WHERE EXCEPTIONS HAVE BEEN TAKEN.

SECTION 15006 - GUARANTEE
1. THIS CONTRACTOR SHALL GUARANTEE ALL MATERIALS AND WORK PROVIDED UNDER THEIR CONTRACT AND SHALL MAKE GOOD, REPAIR OR REPLACE AT THEIR OWN EXPENSE, ANY DEFECTIVE WORK, MATERIAL, OR EQUIPMENT WHICH MAY BE DISCOVERED WITHIN A PERIOD OF 12 MONTHS FROM THE DATE OF ACCEPTANCE (IN WRITING) OF THE INSTALLATION BY TENANT'S PROJECT MANAGER. EXTENDED WARRANTIES ARE AS SPECIFIED WITH INDIVIDUAL EQUIPMENT.

SECTION 15007 - RECORD DRAWINGS
A. THIS CONTRACTOR SHALL MAINTAIN ONE COPY OF DRAWINGS ON THE JOB SITE TO RECORD DEVIATIONS FROM CONTRACT DRAWINGS, SUCH AS:
   1. LOCATION OF CONCEALED PIPING VALVES AND DUCTS.
   2. REVISIONS, ADDENDUMS, AND CHANGE ORDERS.
   3. SIGNIFICANT DEVIATIONS MADE NECESSARY BY FIELD CONDITIONS, APPROVED EQUIPMENT SUBSTITUTIONS, AND CONTRACTOR'S COORDINATION WITH OTHER TRADES.
B. AT COMPLETION OF THE PROJECT AND BEFORE FINAL APPROVAL, THE CONTRACTOR SHALL MAKE ANY FINAL CORRECTIONS TO DRAWINGS AND CERTIFY THE ACCURACY OF EACH PRINT BY SIGNATURE THEREON. ONE COPY OF THE MOST RECENT SET OF DRAWINGS WITH TEMPERATURE CONTROL DRAWINGS INCLUDED SHALL BE DELIVERED TO TENANT'S PROJECT MANAGER.

SECTION 15008 - DISCREPANCIES IN DOCUMENTS
1. DRAWINGS AND SPECIFICATIONS ARE TO BE CONSIDERED AS SUPPLEMENTING EACH OTHER. WORK SPECIFIED BUT NOT SHOWN ON DRAWINGS, OR SHOWN ON DRAWINGS BUT NOT SPECIFIED, SHALL BE PERFORMED OR FURNISHED AS THOUGH MENTIONED IN BOTH SPECIFICATIONS AND DRAWINGS. IF NOT OTHERWISE DIRECTED, INSTALLATION OF ALL SYSTEMS AND EQUIPMENT SHALL BE IN ACCORDANCE WITH APPLICABLE CODES AND IN ACCORDANCE WITH MANUFACTURER'S INSTALLATION INSTRUCTIONS. WHERE WORK DESCRIBED IN THE SPECIFICATIONS IS IN CONFLICT WITH THE WORK SHOWN ON THE DRAWINGS, THE CONTRACTOR SHALL SUPPLY THE GREATER QUANTITY, QUALITY AND COST VIA THE BID AND CONTACT THE ENGINEER FOR CLARIFICATION ON DIRECTION PRIOR TO INSTALLATION.

SECTION 15010 - CUTTING AND PATCHING
1. THE CONTRACTOR SHALL PERFORM ALL CUTTING AND PATCHING AS REQUIRED FOR THE INSTALLATION OF THE WORK UNDER THIS SPECIFICATION. NO CUTTING OF THE STRUCTURE SHALL BE PERMITTED WITHOUT WRITTEN APPROVAL OF THE LANDLORD AND ARCHITECT OR ENGINEER.
2. PATCHING SHALL BE OF THE SAME WORKMANSHIP, MATERIAL AND FINISH AND SHALL MATCH ACCURATELY ALL SURROUNDING CONSTRUCTION IN A MANNER SATISFACTORY TO THE ARCHITECT AND TENANT'S PROJECT MANAGER.
3. EXISTING UTILITIES, ETC. THAT ARE DAMAGED DURING THE CONSTRUCTION PERIOD, WHETHER OR NOT DUE TO THE CONTRACTOR'S NEGLIGENCE SHALL BE REPAIRED OR REPLACED BY THE CONTRACTOR AND LEFT IN A CONDITION SUITABLE TO THE LANDLORD AND TENANT'S PROJECT MANAGER.

SECTION 15012 - HANGERS
1. HANGERS SHALL INCLUDE ALL MISCELLANEOUS STEEL SUCH AS ANGLE IRON, BANDS, C-CLAMPS WITH RETAINING CLIPS, CHANNELS, HANGER RODS, ETC., NECESSARY FOR THE INSTALLATION OF WORK.
2. HANGERS SHALL BE FASTENED TO BUILDING STEEL, CONCRETE, OR MASONRY, BUT NOT TO PIPING. HANGING FROM METAL DECK IS NOT PERMITTED. HANGERS MUST BE ATTACHED TO UPPER CHORD OF BAR JOIST. WHERE INTERFERENCES OCCUR, AND IN ORDER TO SUPPORT DUCTWORK OR PIPING, THE CONTRACTOR MUST INSTALL TRAPEZE TYPE HANGERS OR SUPPORTS WHICH SHALL BE LOCATED WHERE THEY DO NOT INTERFERE WITH ACCESS TO FIRE DAMPERS, VALVES, AND OTHER EQUIPMENT. HANGER TYPES AND INSTALLATION METHODS ARE ALSO SUBJECT TO LANDLORD CRITERIA.
3. HANGERS FOR ALL INSULATED PIPING SHALL BE SIZED AND INSTALLED FOR THE OUTER DIAMETER OF INSULATION. INSTALL 6" LONG SPLIT CIRCLE GALVANIZED SADDLE BETWEEN THE HANGER AND THE PIPE INSULATION.
4. HANGERS AND PIPING OF DISSIMILAR METALS SHALL BE DI-ELECTRICALLY SEPARATED.

DIVISION 15400 - PLUMBING

SECTION 15401 - SUMMARY OF WORK
B. THIS CONTRACTOR SHALL FURNISH ALL LABOR, MATERIALS, EQUIPMENT, ETC. NECESSARY FOR, REASONABLY IMPLIED AND INCIDENTAL TO, THE FURNISHING, INSTALLATION, COMPLETION AND TESTING OF ALL THE WORK FOR THE PLUMBING SYSTEMS AS CALLED FOR IN THE SPECIFICATIONS, SHOWN ON DRAWINGS AND AS REQUIRED BY JOB CONDITIONS, TO INCLUDE, BUT NOT BE LIMITED TO THE FOLLOWING:
   1. CONTRACTOR SHALL DETERMINE THE LOCATION OF EXISTING WATER SUPPLY AND DRAIN LINES AND MAKE PROPER CONNECTIONS, THERETO, INCLUDING VENTS.
   2. ALL MATERIALS SHALL BE NEW AND SHALL FIT THE SPACE AVAILABLE. VERIFY ALL DIMENSIONS AT THE SITE.
   3. ALL VALVES, CLEANOUTS, ETC. SHALL BE SO LOCATED AND INSTALLED TO PERMIT ACCESS FOR SERVICE WITHOUT DAMAGE TO BUILDING OR FINISHED MATERIALS.

SECTION 15402 MATERIALS
A. REFER TO PLANS FOR SCHEDULES OF EQUIPMENT AND FIXTURES. AMERICAN STANDARD, KOHLER AND CRANE ARE CONSIDERED ACCEPTABLE AS EQUALS. ALL PLUMBING EQUIPMENT SHALL BE INSTALLED IN ACCORDANCE WITH THE MANUFACTURER'S RECOMMENDATION.
B. SANITARY PIPING
   1. CAST IRON PIPE (BELOW GRADE): ASTM A74 SERVICE WEIGHT, FITTINGS: CAST IRON, JOINTS: HUB-AND-SPIGOT, COMPRESSION TYPE WITH NEOPRENE GASKETS OR LEAD AND OAKUM.
   2. CAST IRON PIPE (ABOVE GRADE): CISPI 301, HUBLESS FITTINGS: CAST IRON, JOINTS: NEOPRENE GASKET AND STAINLESS STEEL CLAMP AND SHIELD ASSEMBLIES.
   3. ABS PIPE (BELOW GRADE): ASTM D2661, FITTINGS: ABS, JOINTS: SOLVENT WELD.
   4. PVC PIPE (BELOW GRADE): ASTM D2665, FITTINGS: PVC, JOINTS: SOLVENT WELD WITH SOLVENT CEMENT.
   5. COPPER TUBE (ABOVE GRADE): ASTM B88 TYPE "L", HARD TEMPER ONLY. EXCEPT THESE MATERIALS SHALL NOT BE USED TO RECEIVE THE WASTES FROM URINALS NOR WASTES FROM WATER CLOSETS IN BATTERY, FITTINGS: CAST BRONZE, OR WROUGHT COPPER, JOINTS: SOLDER, GRADE 50B.
   6. VENT PIPING ABOVE FLOOR 2" OR SMALLER MAY BE GALVANIZED STEEL.
   7. INSULATE ALL HORIZONTAL RUNS OF PIPING LOCATED IN CEILING SPACES OF TENANTS IN SPACES BELOW, WHEN APPLICABLE. INSULATION TO BE AS SPECIFIED FOR WATER PIPING.
   8. INTERIOR CONDENSATE PIPING SHALL BE TYPE "L" HARD DRAWN COPPER TUBE WITH 95-5 TIN-ANTIMONY SOLDERED JOINTS AND WROUGHT COPPER FITTINGS WITH DIELECTRIC SEPARATION BETWEEN DISSIMILAR METALS. EXTERIOR CONDENSATE PIPING MAY BE SCHEDULE 40 PVC PIPING WITH SOLVENT WELDED FITTINGS IF APPROVED FOR USE BY THE LANDLORD.
C. POTABLE WATER PIPING
   1. COPPER TUBING (BELOW GRADE): ASTM B88, TYPE "K" SOFT COPPER, FITTINGS: CAST COPPER ALLOY OR WROUGHT COPPER AND BRONZE, JOINTS: BCUP SILVER BRAZE.
   2. COPPER TUBING (ABOVE GRADE): ASTM B88, TYPE "L" HARD DRAWN WITH SWEAT JOINTS, FITTINGS: CAST COPPER ALLOY OR WROUGHT COPPER AND BRONZE, JOINTS: BCUP SILVER BRAZE.
D. PIPING OF DISSIMILAR METALS MUST BE DI-ELECTRICALLY SEPARATED.
E. INSULATE ALL HOT WATER, COLD WATER, STORM DRAINAGE, AND INTERIOR CONDENSATE PIPING WITH 1" THICK (K=0.23 @ 75 F) PIPE INSULATION WITH AN ALL SERVICE JACKET TO MEET LOCAL CODES AND UL FLAME SPREAD AND SMOKE DEVELOPED RATINGS. OWENS-CORNING OR EQUAL.
F. INSULATE THE TRAP, SANITARY AND SUPPLY PIPES UNDER LAVATORY WITH 1/2" ARMSTRONG "ARMAFLEX" PIPING INSULATION OR TRUEBRO MODEL 102W WHITE "HANDI LAV GUARD" INSULATION KIT TO COMPLY WITH ADA REQUIREMENTS.
G. INSTALL AIR CHAMBER SHOCK ABSORBERS IN BOTH HOT AND COLD LINES OF PIPING SYSTEM TO PREVENT NOISE AND DAMAGE DUE TO WATER HAMMER. SIOUX CHIEF 650 SERIES ALL STAINLESS STEEL, OR EQUAL. J.R. SMITH "HYDROTROLS", INSTALLED IN AN UPRIGHT POSITION.
H. ALL BRANCH PIPING SYSTEM SHALL HAVE ACCESSIBLE SERVICE VALVE. PROVIDE SHUT OFF VALVES IN THE SUPPLY PIPING TO EVERY FIXTURE. PROVIDE ACCESS DOORS WHERE NECESSARY.
I. INSTALL ALL NECESSARY PIPE HANGERS, SADDLES, AND CARRIERS TO PROPERLY SUPPORT ALL PIPING AND FIXTURES. HANGERS SHALL SUIT TYPE OF PIPING INSTALLED AND BE SPACED AT A MAXIMUM SPAN OF 5 FEET. PROVIDE SWAY AND SEISMIC BRACING WHERE REQUIRED BY CODES.
J. STERILIZE WATER SYSTEM IN ACCORDANCE WITH LOCAL CODES.
K. CLEAN-OUTS AND FLOOR DRAINS SHALL BE INSTALLED PER LOCAL CODES. ALL FLOOR DRAINS SHALL HAVE DEEP SEAL TRAPS. PROVIDE TRAP PRIMERS FOR FLOOR DRAINS.
L. ESCUTCHEONS SHALL BE CHROME PLATED, SIZE AS REQUIRED AND PLACED AT ALL PIPE PENETRATIONS AT WALLS, FLOORS, AND CEILINGS IN FINISHED AREAS.
M. LEAKAGE TESTS SHALL BE PER LOCAL CODES.
N. FLASHING SHALL BE SEALED WATERTIGHT AND PERFORMED IN ACCORDANCE TO THE LANDLORD'S CRITERIA. USE A LANDLORD APPROVED ROOFING CONTRACTOR WHERE APPLICABLE AND INCLUDE ALL COSTS IN BID.
O. PROVIDE WATER METER AND REMOTE READER PER LANDLORD'S CRITERIA OR LOCAL UTILITIES REQUIREMENTS IF APPLICABLE.
P. GAS PIPING
   1. PROVIDE A COMPLETE GAS PIPING SYSTEM IF APPLICABLE. REFER TO PLANS TO DETERMINE IF A GAS SYSTEM IS REQUIRED.
   2. GAS LINES SHALL BE BLACK STEEL, SCHEDULE 40, ASTM A-120, WITH MALLEABLE THREADED FITTINGS FOR 2" AND SMALLER, AND WITH WELDED JOINTS FOR 2-1/2" AND LARGER.
   3. PROVIDE A GAS COCK, PRESSURE REGULATOR (IF REQUIRED) DIRT LEG, UNION CONNECTION, TO EACH PIECE OF EQUIPMENT.
   4. PITCH PIPING AT A UNIFORM GRADE OF 1/4" IN 15 FEET UPWARD IN DIRECTION OF FLOW. SUPPORT PIPING EVERY 5 FEET. SUPPORT AS REQUIRED BY LANDLORD CRITERIA, AS DETAILED ON DRAWINGS, OR BY STANDARD INDUSTRY PRACTICE, WHICHEVER IS MORE STRINGENT.
   5. GAS PIPING EXPOSED ON ROOF MUST BE PRIMED AND PAINTED WITH RUST-INHIBITING PAINT.
   6. GAS PIPING INSTALLED IN RETURN AIR PLENUMS SHALL BE SLEEVED AND VENTED OR WELDED IN ACCORDANCE WITH THE LOCAL GAS COMPANY, LOCAL CODE, AND APPLICABLE NFPA 54 CODES.
   7. TESTING AND PURGING OF GAS PIPING SHALL BE DONE PER THE REQUIREMENTS OF THE LOCAL GAS COMPANY, LOCAL CODES, AND APPLICABLE NFPA 54 CODES.
   8. CONTACT AND COORDINATE GAS SERVICE AND METER REQUIREMENTS WITH THE LOCAL GAS COMPANY AND THE MALL'S OPERATIONS MANAGER PRIOR TO BID. INCLUDE INSTALLATION OF GAS METER AND REGULATOR COSTS IN BID.
   9. STORM DRAINAGE PIPING
Q. STORM DRAINAGE PIPING
   1. PVC PIPE AND FITTINGS
      A. SOLID-WALL PVC PIPE: ASTM D 2665, DRAIN, WASTE, AND VENT.
      B. PVC SOCKET FITTINGS: ASTM D 2665, MADE TO ASTM D 3311, DRAIN, WASTE, AND VENT PATTERS AND TO FIT SCHEDULE 40 PIPE.
      C. SOLVENT CEMENT: ASTM D 2564. PVC SOLVENT CEMENT SHALL HAVE A VOC CONTENT OF 510 G/L OR LESS WHEN CALCULATED ACCORDING TO 40 CFR 59, SUBPART D (EPA METHOD 24).

© COPYRIGHT WILKUS ARCHITECTS

CONSULTANT:
DUNHAM
DUNHAM
50 South Sixth Street / Suite 1100
Minneapolis, Minnesota 55402-1540
PHONE 612.465.7550
FAX 612.465.7551
WEB dunhameng.com
mechanical + electrical
consulting engineering
Dunham Project No.: 0426995-132

CLIENT:
Alliance DEVELOPMENT
FRED JACQUES
ALLIANCE DEVELOPMENT
230 OHIO ST, SUITE 200
OSHKOSH, WI 54902
(612) 313-0126

PROJECT INFORMATION:

SOUTH LA CROSSE SHELL
MORMON COULEE RD & LOSEY BLVD S
LA CROSSE, WI 54601

NOT FOR CONSTRUCTION
01/09/2026

PROJECT NO.: 0425995-132
DRAWN BY: TSB
CHECKED BY: GMS

ISSUE:	DATE:
PERMIT SET	01/09/2026

REVISION:	DATE:

TITLE:
PLUMBING SPECIFICATIONS

SHEET NUMBER:
P2