DRAWING
NOT TO SCALE

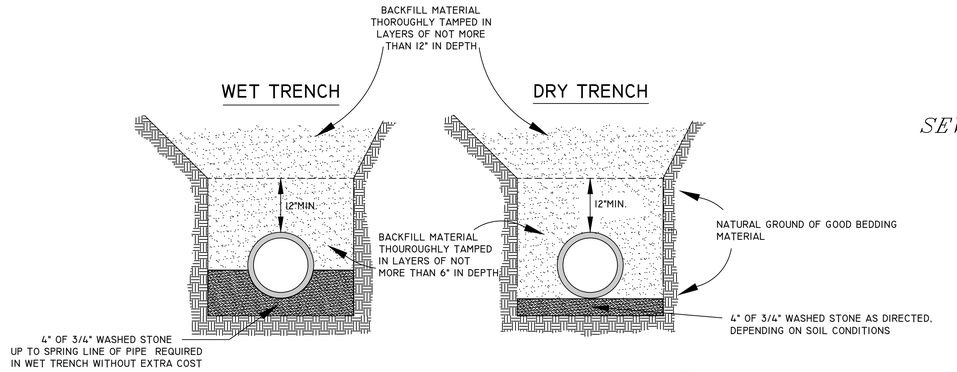

DETAILS OF SEWER TRENCHES (A / D-2)

SEWER PIPE JOINT MATERIALS

CONCRETE PIPE-RUBBER GASKET (ASTM C-443)
PVC PIPE- ELASTOMETRIC GASKET (ASTM D-3212 & F-477)

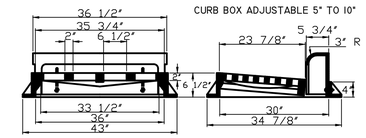

DETAILS OF TYPE "A" CATCH BASIN CASTING
NEENAH R-3246-A OR APPROVED EQUAL

(F / D-2)

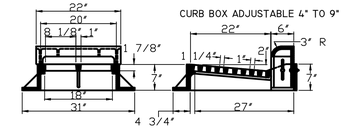

DETAILS OF TYPE "B" CATCH BASIN CASTING
NEENAH R-3234-B1 OR APPROVED EQUAL

NOTE: " DUMP NO WASTE DRAINS TO RIVER"

SHALL BE MOLDED IN ALL CASTINGS FACE

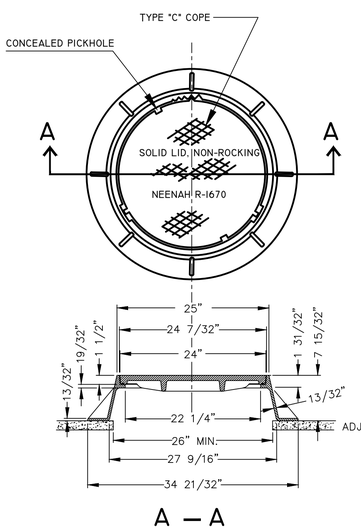

DETAIL OF MANHOLE FRAME & COVER
NEENAH R-1670 OR APPROVED EQUAL

NOTE
OPENING FOR FRAME & COVER SHALL BE CENTERED ON MANHOLES WITH FLAT TOPS.

(B / D-2)

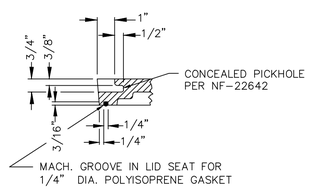

SELF-SEAL DETAIL

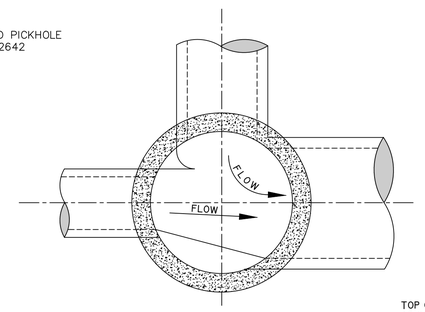

A — A

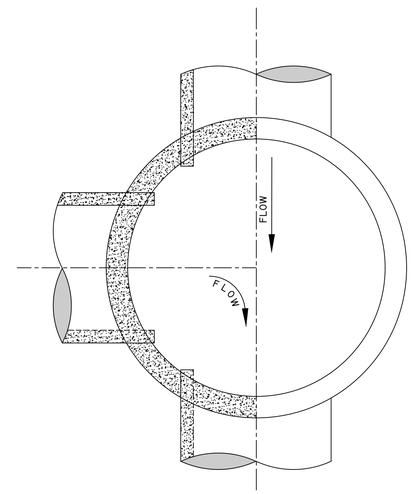

A — A

NOTE ①
TOP OF MANHOLE TO BE 12" BELOW FINISHED GRADE. ADJUSTMENT TO BE OF PRE-CAST CONCRETE RINGS WITH BUTYL GASKETS (ROPE) BETWEEN RINGS AND MORTER BETWEEN CASTING & TOP RING ONLY. (3/4" MORTER MAX.)

NOTE ②
STEPS ARE NOT TO BE INSTALLED IN MANHOLES

NOTE ③
MANHOLE TO BE CONSTRUCTED OF PRE-CAST CONCRETE (ASTM C-478).

NOTE ④
LIFT HOLES TO BE MANUFACTURED WATER PROOF

NOTE ⑤
INVERT TO BE FACTORY MOLDED OR FORMED PER CITY OF LA CROSSE STANDARD SPECIFICATIONS.

NOTE ⑥
ECCENTRIC MANHOLE CONE SECTIONS ARE NOT PERMITTED

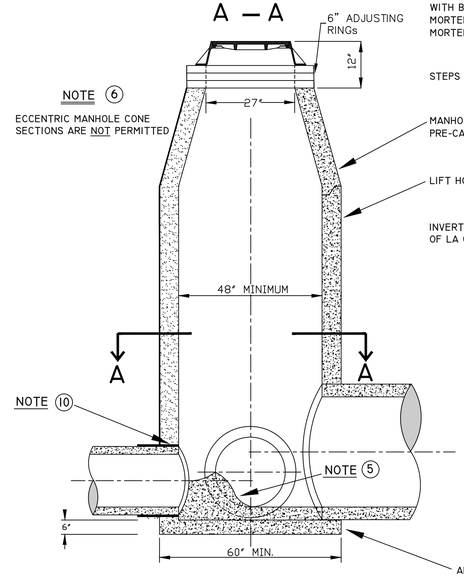

(C / D-2) DETAILS OF STANDARD MANHOLE FOR 30" PIPE OR SMALLER

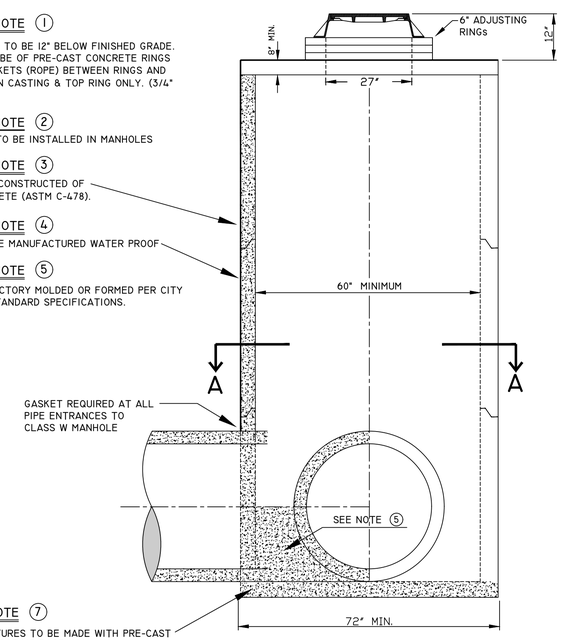

NOTE ⑦
ALL STRUCTURES TO BE MADE WITH PRE-CAST INTEGRAL FOOTING BASE. MIN. 6"

(D / D-2) DETAILS OF STANDARD MANHOLE FOR 36" PIPE OR LARGER

NOTE ⑧
RECTANGULAR OPENING IN TOP
"B" TYPE CASTING - 27" X 22"
"A" TYPE CASTING - 36" X 30"

NOTE ⑨
TOP OF CATCH BASIN TO BE 12" BELOW CATCH BASIN FLOWLINE GRADE ADJUSTMENT TO BE MADE AS IN NOTE ①

CONSTRUCTION OF CATCH BASIN TO BE THE SAME AS IN NOTE ③

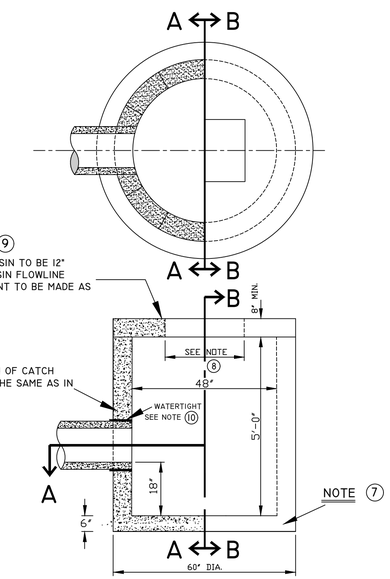

(E / D-2) DETAIL OF TYPE "A" OR "B" CATCH BASIN

NOTE ⑩
THE CONNECTION OF ALL PVC STORM WATER PIPE, SIZE 6" TO 30", TO PRECAST MANHOLES OR OTHER STRUCTURES SHALL EMPLOY A WATERTIGHT, FLEXIBLE PIPE-TO-MANHOLE CONNECTOR

THE CONNECTOR SHALL CONSIST OF A SINGLE RUBBER GASKET, SHALL BE CONSTRUCTED SOLELY OF SYNTHETIC OR NATURAL RUBBER, SHALL MEET/EXCEED THE REQUIREMENTS OF ASTM C 923, AND SHALL HAVE A MINIMUM TENSILE STREGHTH OF 1600 PSI

THE CONNECTOR SHALL BE THE SOLE ELEMENT RELIED ON TO ASSURE A FLEXIBLE, WATERTIGHT SEAL OF THE PIPE TO THE STRUCTURE

STORM SEWER DETAILS

D-2

ENGINEERING DEPT.
City of LaCrosse, Wis.

						BY	DATE
FIELD BOOK	SURVEYED						
NUMBER	DRAWN	PRELIMINARY					
		FINAL					
	CHECKED						
	APPROVED					K.J.C.	11/2025
PAGE	REVISIONS	M.D.F. 3/03	J.M.C. 6/2015			J.M.C.	11/2025
		J.M.C. 9/03	BFM 2/2019				
		M.D.F. 4/06	J.M.C. 8/2019				
SCALE: NONE		M.D.F. 12/10	J.M.C. 11/2023				
		M.D.F. 4/13	J.M.C. 11/2024				