MAYO EMPLOYEES FEDERAL CREDIT UNION

NEW BUILDING

605 WEST AVE S.
LA CROSSE, WI

OWNER:
MAYO EMPLOYEES FEDERAL CREDIT UNION
130 23RD AVE SW
ROCHESTER, MN 55902
TEL: (507) 293-8056
CONTACT: ANDREW SIREK

ARCHITECT:
HTG ARCHITECTS
1010 MAIN STREET
SUITE 100
HOPKINS, MN 55343
TEL: (952) 204-3246
CONTACT: SAM CHALLE

CIVIL ENGINEER:
ANDERSON ENGINEERING
13605 FIRST AVENUE NORTH
SUITE 100
PLYMOUTH, MN 55441
TEL: (763) 412-4035
CONTACT: BRIAN FIELD

STRUCTURAL ENGINEER:
INNOVATIVE STRUCTURAL SOLUTIONS
5279 KYLER AVENUE NE
ALBERTVILLE, MN 55301
TEL: (763) 425-9960
CONTACT: MICHAEL VAN DE RIET

MECH./ ELEC. ENGINEER:
EMANUELSON PODAS, INC.
7705 BUSH LAKE ROAD
EDINA, MINNESOTA 55439
TEL: (952) 930-0050
CONTACT: JOSEPH HAYNES (MECHANICAL)
CONTACT: KYLE McCONNELL (ELECTRICAL)

GENERAL CONTRACTOR:
HOEFT BUILDERS
5410 SEVENS PKWY
SUITE 100
EAU CLAIRE, WI 54701
TEL: (715) 833-1761
CONTACT: AARON STERN

DRAWING INDEX

TS	TITLE SHEET, DRAWING INDEX AND PROJECT DATA
A0.1	BUILDING CODE AND INFORMATION
A0.2	ADA DETAILS
C1	DEMOLITION PLAN
C2	GRADING & DRAINAGE PLAN
C3	EROSION & SEDIMENT CONTROL PLAN
C4	UTILITY & PAVING PLAN
C5	CIVIL DETAILS
L1	RESTORATION PLAN
L2	RESTORATION DETAILS
L3	RESTORATION NOTES
A1.1	SITE PLAN
A1.2	SITE DETAILS
A1.3	ROOF PLAN & ROOF DETAILS
A1.4	ROOF DETAILS
A1.5	ROOF DETAILS
A2.1	FLOOR PLAN, SCHEDULES, AND ENLARGED TOILET PLANS
A2.2	MAIN LEVEL REFLECTED CEILING PLAN
A3.1	EXTERIOR ELEVATIONS
A4.1	BUILDING SECTIONS
A5.1	WALL SECTIONS
A5.2	WALL SECTIONS
A5.3	WALL SECTIONS
A5.4	WALL SECTIONS
A5.5	DETAIL SECTIONS
A6.1	DOOR/ WINDOW FRAME ELEVATIONS AND DETAILS
A6.2	DOOR AND WINDOW FRAME DETAILS
A6.3	DOOR, WINDOW, AND PLAN DETAILS
A6.4	DOOR, WINDOW, AND WALL BASE DETAILS
A7.1	MILLWORK ELEVATIONS AND DETAILS
A7.2	MILLWORK ELEVATIONS AND DETAILS
F1	FINISH PLANS AND SCHEDULES
M0.0	MECHANICAL TITLE SHEET
M0.1	MECHANICAL GENERAL NOTES & SITE PLAN
M1.1	MAIN LEVEL & BELOW FLOOR PLAN - PLUMBING
M2.1	MAIN LEVEL PLAN - HVAC
M3.1	MAIN LEVEL PLAN - PIPING
M4.1	ROOF PLAN - MECHANICAL
M5.1	PLUMBING RISER DIAGRAMS
M6.1	MECHANICAL DETAILS
M7.1	MECHANICAL SCHEDULES
M8.1	MECHANICAL CONTROLS
E0.0	ELECTRICAL TITLE SHEET
E0.1	ELECTRICAL GENERAL NOTES
E0.2	SITE PLAN - PHOTOMETRICS
E0.3	SITE PLAN - ELECTRICAL LIGHT FIXTURES DESCRIPTIONS
E0.4	SITE PLAN - ELECTRICAL
E1.1	MAIN LEVEL PLAN - LIGHTING
E1.2	CLERESTORY LEVEL PLAN - LIGHTING
E2.1	MAIN LEVEL PLAN - POWER
E2.2	CLERESTORY LEVEL PLAN - POWER
E3.1	ELECTRICAL DETAILS
E3.2	ENERGY COMPLIANCE FORMS
E3.3	ENERGY COMPLIANCE FORMS
E4.1	ELECTRICAL SCHEDULES
E4.2	ELECTRICAL SCHEDULES
T1.1	MAIN LEVEL PLAN - TECHNOLOGY

VICINITY MAP

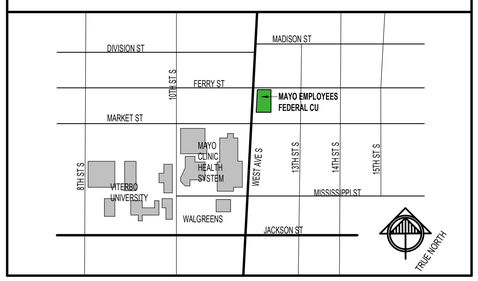

MATERIAL SYMBOLS

STONE	WOOD BLOCKING
FACE BRICK	INTERMEDIATE WOOD BLOCKING
CONCRETE BLOCK (CMU)	FINISH WOOD
CONCRETE/PRECAST	EARTH
GYPSUM BOARD OR PLASTER	SAND OR GRAVEL
EXT. INSUL. & FINISH SYSTEM	PARTICLE BOARD
STRUCTURAL STEEL OR METAL STUDS	BATT. INSULATION
ACOUSTIC TILE	RIGID INSULATION
GRANITE	PLYWOOD

ALTERNATES

Alternate #1:

ABBREVIATIONS

ACT.	ACOUSTICAL TILE	MATL.	MATERIAL
ADJ.	ADJUSTABLE	MAX.	MAXIMUM
AFF.	ABOVE FINISHED FLOOR	MECH.	MECHANICAL
ALT.	ALTERNATE	MFR.	MANUFACTURER
ALUM.	ALUMINUM	MIN.	MINIMUM
APPROX.	APPROXIMATE	MISC.	MISCELLANEOUS
B.O.	BOTTOM OF	MLAM.	METAL LAMINATE
BITUM.	BITUMINOUS	MTL.	METAL
BLDG.	BUILDING	MULL	MULLION
BLKG.	BLOCKING	NIC.	NOT IN CONTRACT
BM.	BEAM	NO.	NUMBER
BOT.	BOTTOM	NOM.	NOMINAL
BRG.	BEARING	NTS.	NOT TO SCALE
C.J.	CONTROL JOINT	O.C.	ON CENTER
C.T.	CERAMIC TILE	O.D.	OUTSIDE DIAMETER
CLG.	CEILING	OPNG.	OPENING
CLR.	CLEAR	PART. BD.	PARTICLE BOARD
CMU.	CONCRETE MASONRY UNIT	PL.	PLATE
COL.	COLUMN	PLAM.	PLASTIC LAMINATE
CONC.	CONCRETE	PLYWD.	PLYWOOD
CONST.	CONSTRUCTION	PREFIN.	PREFINISHED
CONT.	CONTINUOUS	PVC.	POLYVINYL CHLORIDE
CPT.	CARPET	QT.	QUARRY TILE
DIA.	DIAMETER	R.D.	ROOF DRAIN
DIAG.	DIAGONAL	R.O.	ROUGH OPENING
DR.	DOOR	RAD.	RADIUS
EIFS.	EXTERIOR INSULATION FINISH SYSTEM	RECP.	RECEPTACLE
EL.	ELEVATION	REF.	REFERENCE
ELEC.	ELECTRIC (AL)	REINF.	REINFORCE (D) (ING)
ELEV.	ELEVATOR	RESIL.	RESILIENT
EPDM	ETHYLENE/PROPYLENE/DIENE/ MONOMER ROOFING MEMBRANE	REV.	REVISION
		RM.	ROOM
EQ.	EQUAL	S.D.	STORM DRAIN
EQUIP.	EQUIPMENT	SIM.	SIMILAR
EWC.	ELECTRICAL WATER COOLER	SPEC.	SPECIFICATION (S)
EXP.JT.	EXPANSION JOINT	SQ.	SQUARE
EXT.	EXTERIOR	SSTL.	STAINLESS STEEL
EXTG.	EXISTING	STD.	STANDARD
F.D.	FLOOR DRAIN	STL.	STEEL
FEC.	FIRE EXTINGUISHER CABINET	STRUCT.	STRUCTURAL
FFE.	FINISHED FLOOR ELEVATION	SUSP.	SUSPENDED
FIN.	FINISH (ED)	T&G	TONGUE AND GROOVE
FLRG.	FLOORING	T.O.	TOP OF
FND.	FOUNDATION	TEMP.	TEMPERED
FT.	FOOT	THK.	THICK (NESS)
FTG.	FOOTING	TRTD.	TREATED
FURG.	FURRING	TYP.	TYPICAL
GA.	GAUGE	U.N.O.	UNLESS NOTED OTHERWISE
GALV.	GALVANIZED	VB.	VAPOR BARRIER
GL.	GLASS	VCT.	VINYL COMPOSITE TILE
GYP.BD.	GYPSUM BOARD	VFY.	VERIFY
HM.	HOLLOW METAL	w/	WITH
HORZ.	HORIZONTAL	w/o	WITHOUT
HT.	HEIGHT	WD.	WOOD
HVAC	HEATING/VENTILATION/AIR CONDITIONING	WDW.	WINDOW
ID.	INSIDE DIAMETER	WT.	WEIGHT
IN.	INCH	WWF.	WELDED WIRE FABRIC
INCL.	INCLUD (D) (ING)		
INSUL.	INSULATION		
INT.	INTERIOR		
ISO.	ISOCYANURATE		
JT.	JOINT		
LAM.	LAMINATE		
M.O.	MASONRY OPENING		

HTG architects
www.htg-architects.com
Minneapolis Bismarck
1010 Mainstreet, Suite 100
Hopkins, MN 55343
Tel: 952.278.8880

PROJECT

MAYO EMPLOYEES FEDERAL CREDIT UNION

NEW BUILDING

605 WEST AVE S.
LA CROSSE, WI

BID SET	03/27/2026
REVISIONS	

DATE	NO	

WISCONSIN SEAN RABOIN 12055 HOPKINS, MINN ARCHITECT

SEAN C. RABOIN
12055 03/27/2026
Reg No. Date

TITLE SHEET, DRAWING INDEX AND PROJECT DATA

Drawn By: SRC Checked By: SCR

TS

251167

COPYRIGHT © HTG ARCHITECTS

Autodesk Docs:\Mayo Employees FCU\La Crosse-W\251167_Arch_Central_R25.rvt
3/27/2026 2:46:09 PM

BUILDING CODE INFORMATION

CHAPTER 1: CODES AND STANDARDS
2021 WISCONSIN ADMINISTRATIVE CODE
2021 INTERNATIONAL BUILDING CODE
2021 INTERNATIONAL ENERGY CONSERVATION CODE (IECC)
2021 INTERNATIONAL MECHANICAL CODE (IMC)
2021 INTERNATIONAL FUEL GAS CODE (IFGC)
2021 ICC / ANSI A117.1 ACCESSIBLE AND USEABLE BUILDINGS & FACILITIES

CHAPTER 3: USE AND OCCUPANCY CLASSIFICATION
SINGLE TENANT NON-SPRINKLED BUILDING - CLASSIFIED USE OF THE BUILDING GROUP 'B' - OFFICE
303.1.2 SMALL ASSEMBLY SPACES (B OCCUPANCIES) : VIDEO CONF. 109, LOUNGE 118

CHAPTER 5: GENERAL BUILDING HEIGHTS AND AREAS
TABLE 504.3 ALLOWABLE BUILDING HEIGHT IN FEET ABOVE GRADE PLANE
TABLE 504.4 ALLOWABLE NUMBER OF STORIES ABOVE GRADE PLAN

OCCUPANCY B, SPRINKLED, TYPE V-B CONSTRUCTION = 40'-0", 2 STORIES ALLOWED
ACTUAL BUILDING HEIGHT: 23'-0", 1 STORY

(506.2) ALLOWABLE AREA FACTOR = 36,000 SF
ACTUAL BUILDING AREA: 2,770 SF

CHAPTER 6: TYPES OF CONSTRUCTION
TYPE OF CONSTRUCTION: V-B (NON-SPRINKLED)

TABLE 601: FIRE RESISTANCE RATING REQUIREMENTS FOR BUILDING ELEMENTS (HOURS):

PRIMARY STRUCTURAL FRAME	0
BEARING WALLS, EXTERIOR	0
BEARING WALLS, INTERIOR	0
NONBEARING WALLS, EXTERIOR	0
NONBEARING WALLS, INTERIOR	0
FLOOR CONSTRUCTION AND ASSOCIATED SECONDARY MEMBERS	0
ROOF CONSTRUCTION AND ASSOCIATED SECONDARY MEMBERS	0

CHAPTER 8: INTERIOR FINISHES (TABLE 803.13)

EXIT STAIRS / RAMPS AND PASSAGEWAYS	B
EXIT CORRIDORS AND ENCLOSED EXIT ACCESS SPACES	C
ROOMS AND OTHER ENCLOSED SPACES	C

CHAPTER 10: MEANS OF EGRESS
TABLE 1004.5 - MAXIMUM FLOOR AREA ALLOWANCES PER OCCUPANT

GROUP B - OFFICE
2,770 SF / 150 GROSS PER OCCUPANT = **19 OCCUPANTS**

(MAX OCCUPANT LOAD OF SPACE = 49 OCCS.)

NUMBER OF EXITS AND EGRESS SIZING:
NUMBER OF EXITS: SECTION 1006.2.1 / TABLE 1006.2.1
SPACES WITH ONE EXIT B OCCUPANCY — 1-49 OCCS.

EXITS REQUIRED: 1
EXITS PROVIDED: 2

EGRESS SIZING- PER 1005.3.2
TOTAL EGRESS WIDTH REQUIRED: 19 OCCUPANTS X .2 = 3.8"
TOTAL EGRESS WIDTH PROVIDED: 66"

1006.2.1 MAX COMMON PATH OF EGRESS TRAVEL DISTANCE = 100'-0" WITH LESS THAN 30 OCCS.

TABLE 1017.2 EXIT ACCESS TRAVEL DISTANCE FOR B OCCUPANCY WITH NO SPRINKLER SYSTEM = 200'-0"
1017.3 MEASUREMENT: "EXIT ACCESS TRAVEL DISTANCE SHALL BE MEASURED FROM THE MOST REMOTE POINT OF EACH ROOM, AREA, OR SPACE ALONG THE NATURAL AND UNOBSTRUCTED PATH OF HORIZONTAL AND VERTICAL EGRESS TRAVEL TO THE ENTRANCE TO AN EXIT."

CHAPTER 29: PLUMBING SYSTEMS
TABLE 2902.1: MINIMUM NUMBER OF REQUIRED PLUMBING FIXTURES AS CALCULATED BY OCCUPANCY IN ACCORDANCE WITH CHAPTER 3, BUILDING OCCUPANCY, B - BUSINESS (OFFICE)

DRINKING FOUNTAINS
1-100 OCCUPANTS = 1 DRINKING FOUNTAIN REQUIRED — 1 DRINKING FOUNTAINS PROVIDED, 1 BOTTLE FILL PROVIDED

SERVICE SINK
1 REQUIRED, 1 PROVIDED IN MECHANICAL ROOM

WATER CLOSETS (19 OCCUPANTS)
"B" OCCUPANCY: 1 PER 25 FOR THE FIRST 50 AND 1 PER 50 FOR THE REMAINDER EXCEEDING 50
19/25 = 0.76 WATER CLOSETS REQUIRED — 2 WATER CLOSETS PROVIDED (UNISEX)

LAVATORIES (19 OCCUPANTS)
"B" OCCUPANCY: 1 PER 40 FOR THE FIRST 80 AND 1 PER 80 FOR THE REMAINDER EXCEEDING 80
19/40 = 0.475 LAVATORIES REQUIRED — 2 LAVATORIES PROVIDED (UNISEX)

ENERGY CODE

2021 INTERNATIONAL ENERGY CONSERVATION CODE (IECC) WITH ANSI / ASHRAE / IESNA 90.1
PROJECT LOCATION: LA CROSSE, WI, - ZONE 6A

PRESCRIPTIVE BUILDING ENVELOPE COMPLIANCE PATH: SECTION 5.5
TABLE 5.5-6 BUILDING ENVELOPE REQUIREMENTS FOR CLIMATE ZONE 6 (A, B)

AIR LEAKAGE TEST: REQUIRED - WHOLE BUILDING
- BUILDING IS LESS THAN 50,000 SF. WHOLE BUILDING, THIRD PARTY TESTING OF BUILDING UTILIZING A BLOWER DOOR TEST IS REQUIRED. LEAKAGE CANNOT EXCEED 0.40 CFM/SF.
- SEE SECTION 01 5179 - TEMPORARY ENVIRONMENTAL CONTROLS.

CONTINUOUS AIR BARRIER: REQUIRED - BUILDING ADDITION

OPAQUE ELEMENT	MAXIMUM ALLOWABLE U-VALUE FOR ASSEMBLY	INSUL. MIN. R-VALUE
ROOFS		
INSULATION ENTIRELY ABOVE ROOF DECK	U-0.032	R-30 C.I.
WALLS, ABOVE GRADE		
METAL FRAMED	U-0.051	R-13 + R12.5 C.I.
WALLS, BELOW GRADE		
POURED CONC.	C-0.092	R-10 C.I.
SLAB ON GRADE FLOORS		
UNHEATED SLABS, PERIMETER INSULATION	F-0.510	R-20 FOR 24 INCHES
OPAQUE DOORS		
SWINGING	U-0.370	R-2.7 INSULATED HOLLOW METAL
FENESTRATION		
METAL FRAMING	U-0.42	ALUMINUM STOREFRONT WITH THERMAL BREAK, U-0.42 MAX.
METAL FRAMING (ENTRANCE DOORS)	U-0.63	ALUMINUM ENTRANCE DOORS, U-0.63 MAX.

CODE PLAN LEGEND

- COMMON PATH OF TRAVEL
- MAXIMUM PATH OF TRAVEL
- MOST REMOTE POINT (M.R.P.)
- TS — TACTILE SIGNAGE LOCATED AT ALL MEANS OF EGRESS.
- EMERGENCY EXIT SIGNS w/ EMERGENCY LIGHT
- FE — TYPE ABC FIRE EXTINGUISHER LOCATED TO PRIVIDE TOTAL BUILDING COVERAGE WITH 75'-0" RADIUS EACH
- 34" — EXIT WIDTH
- P — PANIC HARDWARE

AREA SCHEDULE - LIFE SAFETY

LEVEL	NAME	AREA	OCC TYPE	OCC LOAD FACTOR	CALC OCC
MAIN LEVEL	BANK - BUSINESS	2,260 SF	B	150	16
MAIN LEVEL	MECHANICAL	159 SF	B	150	2
MAIN LEVEL	STORAGE	56 SF	B	150	1
MAIN LEVEL		2,475 SF			
TOTAL:		2,475 SF			

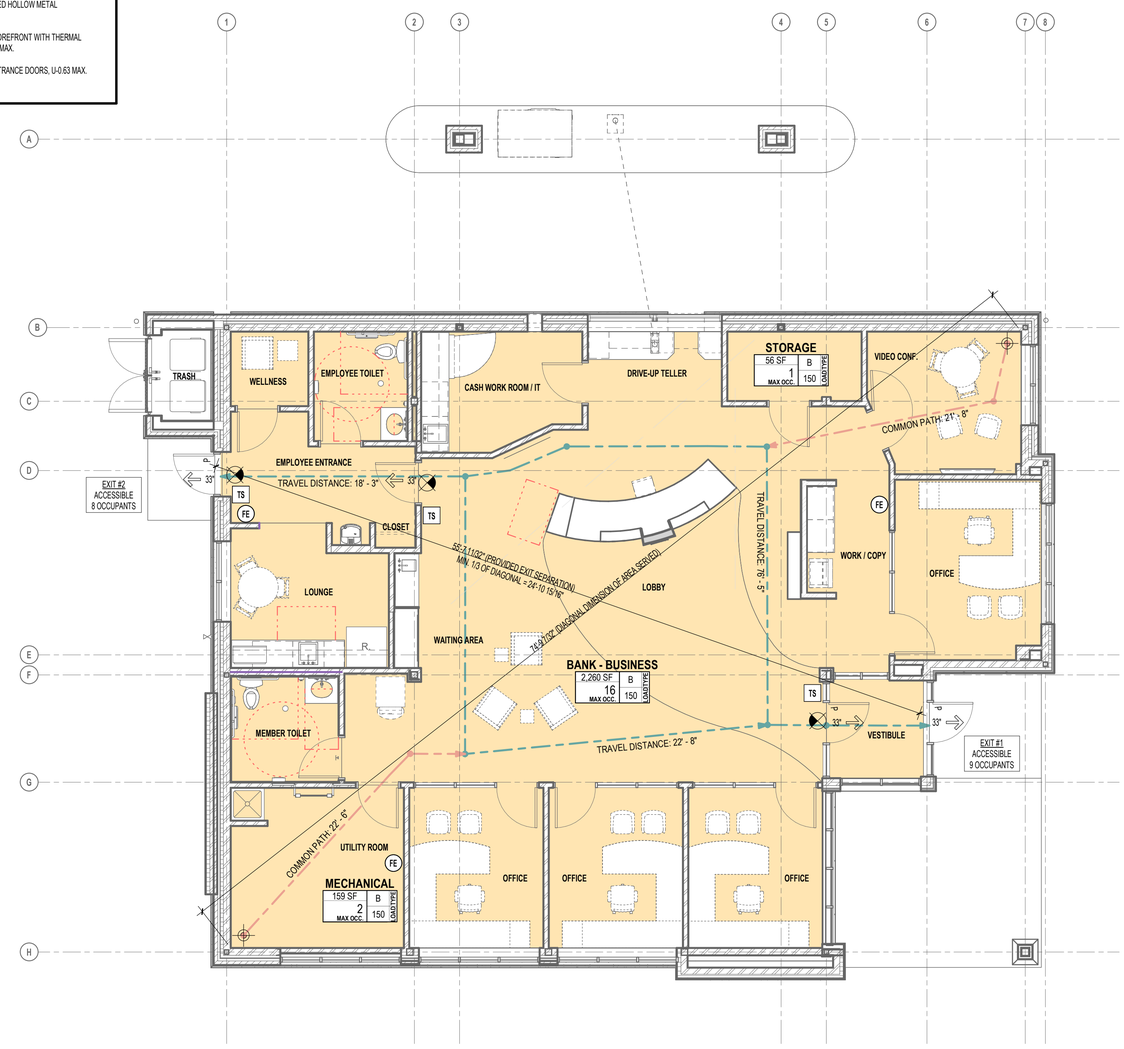

1 / A0.1 **MAIN LEVEL LIFE SAFETY PLAN**
3/16" = 1'-0"

TRUE NORTH PLAN NORTH

HTG architects
www.htg-architects.com
Minneapolis Bismarck
1010 Mainstreet, Suite 100
Hopkins, MN 55343
Tel: 952.278.8880

PROJECT

MAYO EMPLOYEES FEDERAL CREDIT UNION

NEW BUILDING

605 WEST AVE S.
LA CROSSE, WI

BID SET	03/27/2026
REVISIONS	
DATE NO	

WISCONSIN SEAN RABOIN 12055 HOPKINS, MN ARCHITECT

SEAN C. RABOIN
12055 — 03/27/2026
Reg No. — Date

BUILDING CODE AND INFORMATION

Drawn By: SKJ — Checked By: SCR

A0.1

251167

COPYRIGHT © HTG ARCHITECTS

Autodesk Docs://Mayo Employees FCU-La Crosse-WI/251167_Arch_Central_R25.rvt
3/27/2026 3:46:10 PM

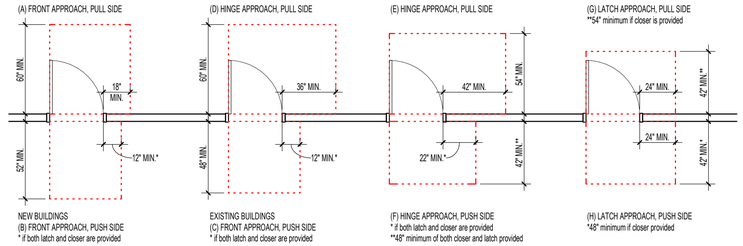

1 A0.2 **MANEUVERING CLEARANCES REQUIREMENTS AT MANUAL SWINGING DOORS - ICC A117.1**
1/4" = 1'-0"

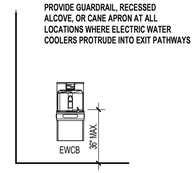

2 A0.2 **WATER COOLER - FRONT**
1/4" = 1'-0"

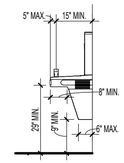

3 A0.2 **WATER COOLER - SIDE**
3/8" = 1'-0"

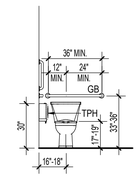

TOILET AND GRAB BARS - FRONT VIEW

4 A0.2 **ADA TOILET ELEVATION - FRONT**
1/4" = 1'-0"

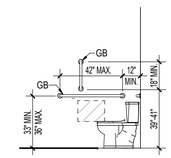

TOILET & GRAB BARS - SIDE VIEW

5 A0.2 **ADA TOILET ELEVATION - SIDE**
1/4" = 1'-0"

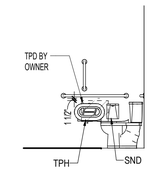

TOILET PAPER DISPENSER & SANITARY NAPKIN DISPOSAL

6 A0.2 **ADA TOILET ELEVATION - SIDE**
1/4" = 1'-0"

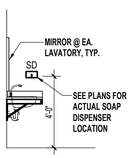

7 A0.2 **LAVATORY, SINGLE - SIDE**
1/4" = 1'-0"

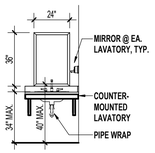

8 A0.2 **LAVATORY, SINGLE**
1/4" = 1'-0"

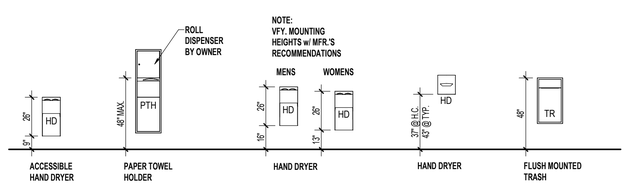

9 A0.2 **HAND DRYER, TOILET ELEVATIONS-PAPER TOWEL DISPENSER, TRASH**
1/4" = 1'-0"

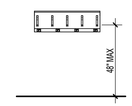

11 A0.2 **MOP AND BROOM HOLDER**
1/4" = 1'-0"

Autodesk Docs://Mayo Employees FCU-La Crosse-HW251167_Arch_Central_R25.rvt
3/27/2026 2:46:12 PM

HTG architects
www.htg-architects.com
Minneapolis Bismarck
1010 Mainstreet, Suite 100
Hopkins, MN 55343
Tel: 952.278.8880

PROJECT

MAYO EMPLOYEES FEDERAL CREDIT UNION

NEW BUILDING

605 WEST AVE S.
LA CROSSE, WI

BID SET	03/27/2026

REVISIONS

DATE	NO	

WISCONSIN SEAN RABOIN 12055 HOPKINS, MN ARCHITECT

SEAN C. RABOIN
12055 03/27/2026
Reg No. Date

ADA DETAILS

Drawn By: HTG Checked By: SCR

A0.2

251167

COPYRIGHT © HTG ARCHITECTS

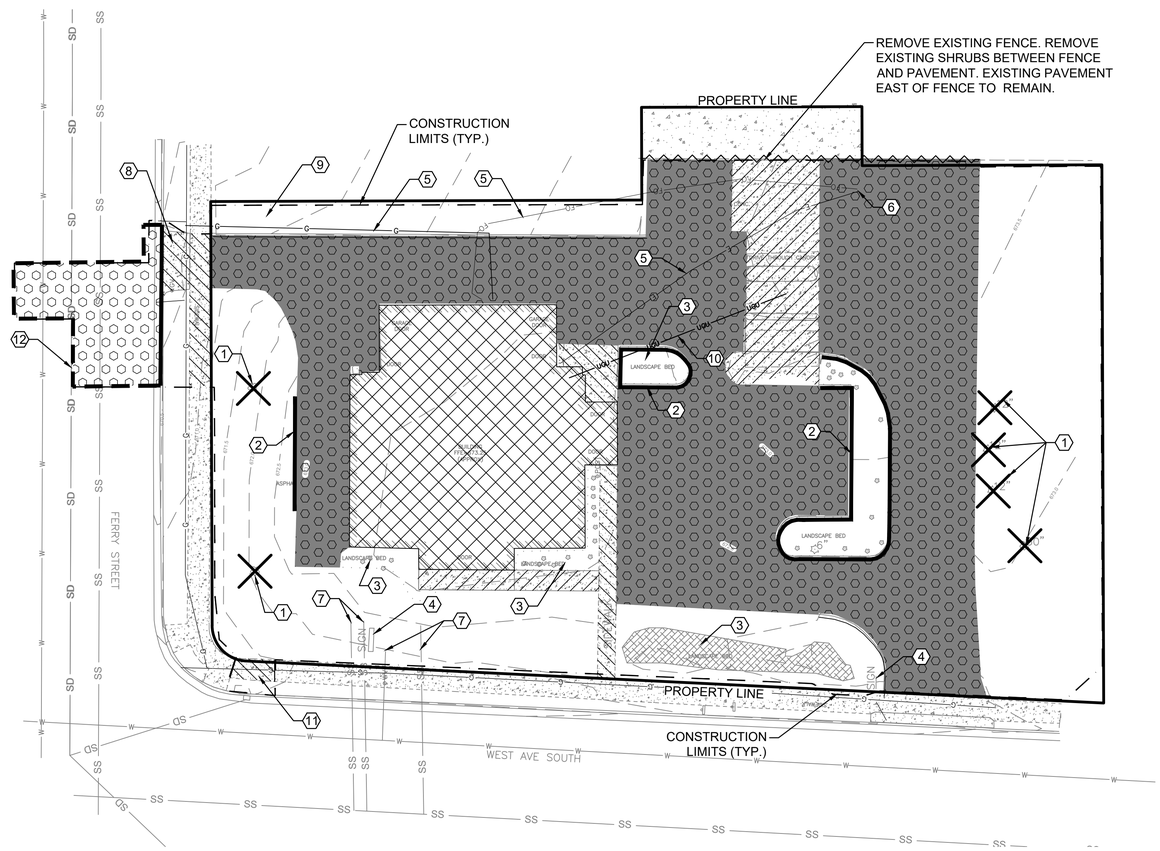

PERMITTING

THE CONTRACTOR SHALL OBTAIN AND MAINTAIN ALL PERMITS, LICENSES, AND APPROVALS REQUIRED FOR THE WORK PRIOR TO COMMENCEMENT OF CONSTRUCTION. THE CONTRACTOR IS RESPONSIBLE FOR VERIFYING PERMIT REQUIREMENTS WITH ALL AUTHORITIES HAVING JURISDICTION AND ENSURING THAT ALL REQUIRED PERMITS ARE OBTAINED AND ACTIVE BEFORE BEGINNING ANY CONSTRUCTION ACTIVITIES. PERMITS MAY BE REQUIRED FROM, THE CITY OF LA CROSSE, WISCONSIN DEPART OF NATURAL RESOURCES (WIDNR), UTILITY PROVIDERS, AND OTHER APPLICABLE AGENCIES. PERMITS AND APPROVALS MAY INCLUDE BUT ARE NOT LIMITED TO THE FOLLOWING :

- BUILDING PERMIT
- SITE/LAND DISTURBANCE PERMIT
- EROSION CONTROL PERMIT
- RIGHT OF WAY FOR WORK IN PUBLIC STREETS OR SIDEWALKS (CITY OR STATE)
- WATER SERVICE CONNECTION PERMIT
- SANITARY SERVICE CONNECTION PERMIT
- UTILITY RELOCATION OR COORDINATION PERMITS WITH APPLICABLE UTILITY COMPANIES
- WIDNR CONSTRUCTION SITE STORMWATER PERMIT
- DEWATERING PERMIT IF GROUND WATER PUMPING IS REQUIRED

THIS LIST IS NOT INTENDED TO BE COMPREHENSIVE. THE CONTRACTOR SHALL BE RESPONSIBILE FOR INDENTIFYING AND OBTAINING ANY ADDITIONAL PERMITS OR APPROVALS REQUIRED TO COMPLETE THE WORK IN COMPLIANCE WITH ALL APPLICABLE LOCAL, STATE, AND FEDERAL REGULATIONS. NO CONSTRUCTION ACTIVITIES SHALL BEGIN UNTIL ALL REQUIRED PERMITS AND APPROVALS HAVE BEEN SECURED.

CALL 48 HOURS BEFORE DIGGING:

DIGGERS HOTLINE

(800) 242-8511

N

0 20' 40'

LEGEND

- PROPERTY LIMITS
- CONSTRUCTION LIMITS
- EXISTING WATERMAIN
- SD — EXISTING STORM SEWER
- SS — EXISTING SANITARY SEWER
- G — EXISTING GAS MAIN
- FO — EXISTING FIBER OPTIC LINE
- E — EXISTING UNDERGROUND ELECTRIC
- UGU — EXISTING UNDERGROUND UTILITY
- SAWCUT LINE
- REMOVE EXISTING CONCRETE C&G
- REMOVE BITUMINOUS PAVEMENT
- REMOVE EXISTING CONCRETE PAVEMENT
- REMOVE EXISTING BUILDING
- REMOVE EXISTING TREE

DEMOLITION NOTES

1. UTILITIES SHOWN HERE ARE FOR INFORMATIONAL USE ONLY AND ARE NOT GUARANTEED IN THEIR ACCURACY. VERIFY WORK. NOTIFY ENGINEER OF ANY/ALL DISCREPANCIES WITHIN 24 HOURS OF DISCOVERY.
2. CONTRACTOR SHALL HIRE PRIVATE UTILITY LOCATOR AS NECESSARY TO VERIFY UNDERGROUND UTILITIES. UTILITIES SHOWN ON PLANS MAY VARY FROM EXISTING CONDITIONS, AND CONTRACTOR IS RESPONSIBLE FOR ANY DAMAGE CAUSED TO UTILITY LINES SHOWN, NOT SHOWN, OR SHOWN INCORRECTLY.
3. ALL UNDERGROUND UTILITIES MUST BE LOCATED PRIOR TO EXCAVATION OR GRADING ON SITE. CALL WISCONSIN ONE-CALL AT 800-242-8511 AT LEAST 48 HOURS PRIOR TO EXCAVATION TO SCHEDULE UTILITY LOCATIONS FOR THIS SITE. CONTRACTOR TO REPAIR ANY DAMAGED UNDERGROUND UTILITIES DURING CONSTRUCTION AT NO COST TO OWNER.
4. CONTRACTOR SHALL PROVIDE DIGITAL RECORD OF ALL EXISTING CONDITIONS TO REMAIN IN PLACE THAT MAYBE DAMAGED CAUSED BY REGULAR CONSTRUCTION OPERATIONS.
5. CONTRACTOR TO VERIFY EXISTING INVERT ELEVATIONS, SIZE, AND TYPE OF ALL SANITARY, STORM, AND WATERMAIN CONNECTION LOCATIONS PRIOR TO INSTALLATION. NOTIFY ENGINEER & OWNER OF DISCREPANCIES WITHIN 24 HOURS OF DISCOVERY.
6. CONTRACTOR SHALL OBTAIN ALL NECESSARY PERMITS FOR DEMOLITION, REMOVAL, AND DISPOSAL.
7. ALL MATERIAL DESIGNATED FOR REMOVAL TO BECOME PROPERTY OF THE CONTRACTOR UNLESS OTHERWISE NOTED. CONTRACTOR SHALL HAUL MATERIAL OFF-SITE AND DISPOSE IN A RESPONSIBLE MANNER.
8. CONTRACTOR TO COORDINATE WITH SMALL UTILITY OWNER FOR REMOVAL/REPLACEMENT WORK.
9. CONTRACTOR TO REVIEW ALL TREE AND OTHER SIGNIFICANT LANDSCAPE REMOVAL LIMITS WITH OWNER PRIOR TO CONSTRUCTION.

KEY NOTES

1. REMOVE EXISTING TREE (TYP)
2. REMOVE EXISTING CONCRETE CURB & GUTTER
3. REMOVE LANDSCAPE AREAS. REFER TO SITE GEOTECHNICAL REPORT FOR MORE INFORMATION ON SUBGRADE ORGANIC REMOVALS.
4. REMOVE EXISTING SIGN.
5. REMOVE AND RELOCATE UNDERGROUND ELECTRIC, GAS, AND FIBER OPTIC LINES. CONTRACTOR TO COORDINATE WITH RESPECTIVE SMALL UTILITY OWNER ON RELOCATED LOCATION.
6. REMOVE EXISTING POWER POLE
7. CONTRACTOR TO REMOVE EXISTING BUILDING WATER AND SANITARY SERVICE TO PROPERTY LINE. BEFORE CONSTRUCTION ACTIVITIES BEGIN, FIELD VERIFY VIA EXCAVATION OR PRIVATE UTILITY LOCATE EXACT LOCATION OF WATER AND SANITARY SEWER CONNECTION TO CITY INFRASTRUCTURE. NOTIFY ARCHITECT/ENGINEER IMMEDIATELY IF DISCREPANCIES FROM THE PLANS ARE FOUND.
8. CONTRACTOR TO COORDINATE WITH CITY ON APRON, SIDEWALK, AND UTILITY INSTALLATION WITH TIMING TO STREET RECONSTRUCTION
9. CLEAR AND GRUB EXISTING TREE LINE PER OWNERS DIRECTION
10. CONTRACTOR TO LOCATE AND REMOVE EXISTING DRIVE-TRHU PNEUMATIC TELLER TUBE SYSTEM AND ALL ASSOCIATED COMPONENTS SERVING THE EXISTING BANK DRIVE-THRU, INCLUDING BUT NOT LIMITED TO, THE 32" TYPE SYSTEM, CARRIERS, TUBING, BLOWERS, MOTORS, CONTROL EQUIPMENT, WIRING, SUPPORTS, AND ANY ASSOCIATED FOUNDATIONS AND MOUNTING HARDWARE.
11. REMOVE CONCRETE SIDEWALK FOR STORM CONNECTION
12. FULL DEPTH SAWCUT PERPENDICULAR TO TRAFFIC

HTG architects

www.htg-architects.com
Minneapolis
Bismarck

1010 Mainstreet, Suite 100
Hopkins, MN. 55343
Tel: 952.278.8880

PROJECT

MAYO EMPLOYEES CREDIT UNION

ADDITION/REMODELING

LA CROSSE, WI

ISSUED SET MARCH 27, 2026

REVISIONS

DATE	NO.	

I HEREBY CERTIFY THAT THIS PLAN, SPECIFICATION OR REPORT WAS PREPARED BY ME OR UNDER MY DIRECT SUPERVISION, AND THAT I AM A DULY LICENSED ENGINEER UNDER THE LAWS OF THE STATE OF WISCONSIN.

NOT FOR CONSTRUCTION

ERIC SAUTBINE, P.E.

E-43034-6 03/27/2026
REG. NO. DATE

ANDERSON
13605 1st Avenue N. #100
Plymouth, MN 55441 | ae-mn.com
P 763.412.4000 | F 763.412.4090
Anderson Engineering of Minnesota, LLC

DEMOLITION PLAN

DRAWN BY: BN CHECKED BY: BF

C1

231139 - AE PROJ # 18994

COPYRIGHT © BY HTG ARCHITECTS

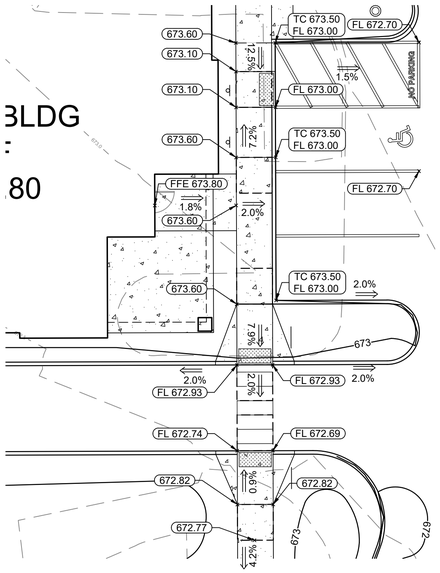

1 ACCESSIBLE RAMPS GRADING DETAIL

SCALE: 1" = 10'

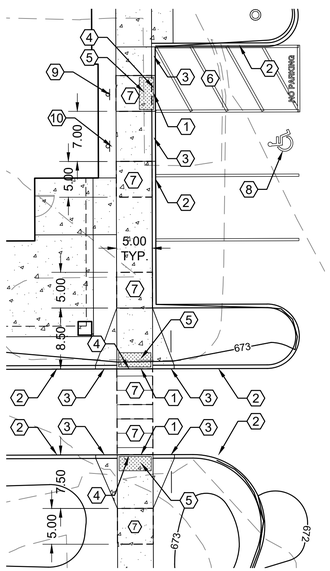

2 ACCESSIBLE RAMPS DIMENSIONS DETAIL

SCALE: 1" = 10'

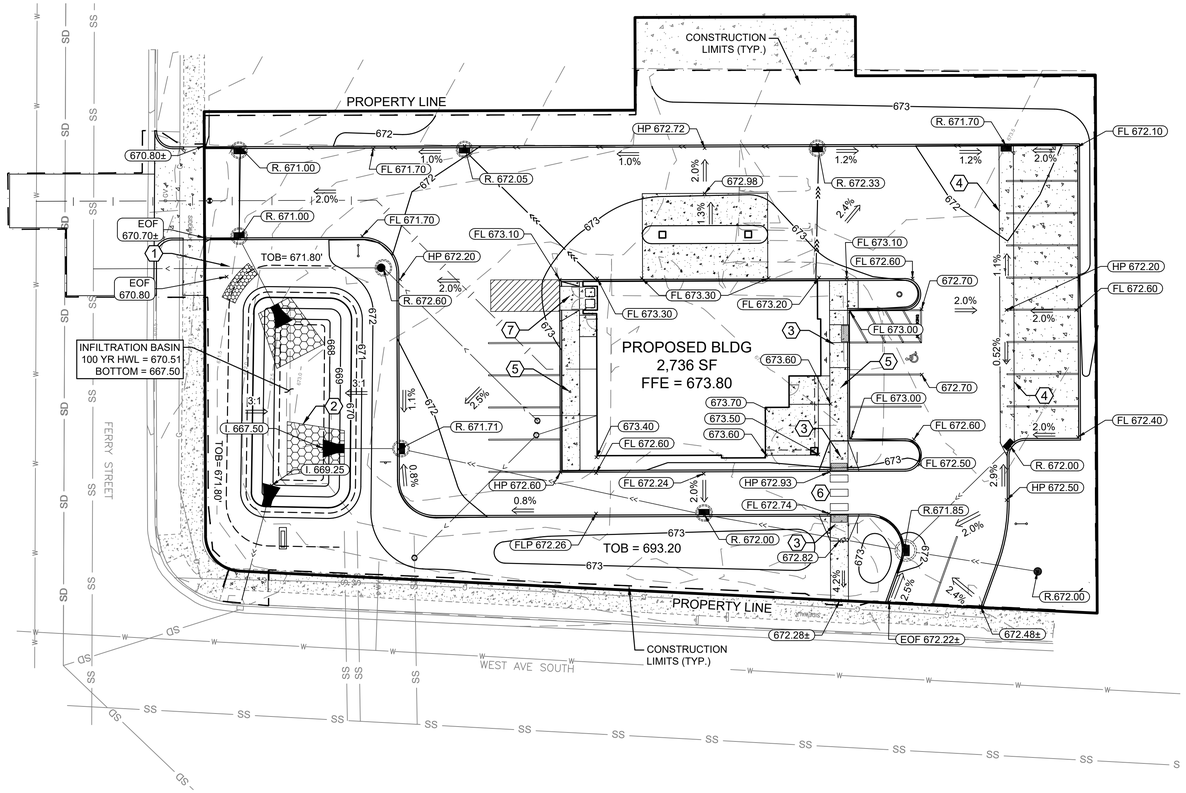

ACCESSIBILITY KEY NOTES

1. 0" CURB HEIGHT AT PEDESTRIAN RAMP
2. FULL CURB HEIGHT
3. VARIABLE HEIGHT CURB
4. ½" PREFORMED JOINT FILLER SHALL BE PLACED FLUSH WITH BACK OF CURB AND ADJACENT TO SIDEWALK.
5. RECTANGULAR DETECTABLE WARNING SHALL EXTEND 4' MIN. INWIDTH AND 2' MIN IN THE PATH OF TRAVEL. DETECTABLE WARNING SHALL BE SET FROM THE BACK OF CURB IN ACCORDANCE WITH THE 2010 ADA STANDARDS FOR ACCESSIBILITY.
6. 4" PAINTED DIAGONAL LINES 45° - 3' CENTER TO CENTER.
7. 4' BY 4' MIN. LANDING WITH MAX. 2.0% SLOPE IN ALL DIRECTIONS
8. WHITE REFLECTIVE PAINT RECTANGLE CENTERED AROUND ACCESSIBILITY PARKING SYMBOL. LINE TO BE 3 INCHES WIDE, OVER A WIDTH OF 36 INCHES AND HEIGHT OF 41 INCHES PER 2010 ADA STANDARDS FOR ACCESSIBILITY.
9. HANDICAP STALL SIGN TO COMPLY WITH 2010 ADA STANDARDS FOR ACCESSIBILITY CODE 502.6. SEE DETAIL 4/C5
10. NO PARKING SIGN TO COMPLY WITH 2010 ADA STANDARDS FOR ACCESSIBILITY CODE 502.6.

SPOT ELEVATION KEY

±	MATCH EXISTING GRADE
TC	TOP OF CURB ELEVATION
FL	FLOW LINE ELEVATION
FFE	FINISHED FLOOR ELEV

ACCESSIBILITY NOTES

1. PROPOSED SPOT ELEVATIONS ARE TO TOP OF FINISHED SURFACE UNLESS OTHERWISE NOTED IN LEGEND .
2. ALL CONSTRUCTION OF HANDICAP STALLS, ROUTES, & CURB RAMPS TO COMPLY WITH THE 2017 WI ACCESSIBILITY CODE.
3. CONTRACTION JOINTS SHALL BE CONSTRUCTED ALONG ALL GRADE BREAKS. ALL GRADE BREAKS SHALL BE PERPENDICULAR TO THE PATH OF TRAVEL .
4. TO ENSURE RAMPS & LANDINGS ARE PROPERLY CONSTRUCTED, LANDINGS MAY BE CAST SEPARATELY.
5. ALL SLOPES ARE ABSOLUTE, RATHER THAN RELATIVE TO SIDEWALK/ROADWAY GRADES.
6. TOP OF CURB SHALL MATCH PROPOSED ADJACENT WALK GRADE.

N

0 20' 40'

LEGEND

	PROPERTY LIMITS
	CONSTRUCTION LIMITS
672	EXISTING MINOR CONTOUR
670	EXISTING MAJOR CONTOUR
672	PROPOSED MINOR CONTOUR
670	PROPOSED MAJOR CONTOUR
2.0%	DRAINAGE ARROW
	PROPOSED CONCRETE C&G

SPOT ELEVATION KEY

±	EXISTING GRADE
FL	GUTTER FLOW LINE
HP	HIGH POINT ELEVATION
R	RIM ELEVATION
I	INVERT ELEVATION
EOF	EMERGENCY OVERFLOW ELEVATION
FFE	FINISHED FLOOR ELEVATION
TOB	TOP OF BEARM ELEVATION

CONTRACTOR NOTES

1. DISTURBED AREA IS EQUAL TO 0.77 ACRES. WISCONSIN DNR STORMWATER PERMIT WILL NOT BE REQUIRED FOR THIS PROJECT.
2. PROPOSED SPOT ELEVATIONS ARE TO TOP OF FINISHED SURFACE UNLESS OTHERWISE NOTED IN LEGEND.
3. TAKE ALL NECESSARY PRECAUTIONS TO PROTECT EXISTING UTILITIES. LOCATIONS OF UTILITIES SHOWN BASED ON SURVEY AND AS-BUILT INFORMATION AND MAY NOT REPRESENT ACTUAL CONDITIONS. CONTRACTOR IS RESPONSIBLE FOR UTILIZING UTILITY LOCATES PRIOR TO STARTING ANY WORK.
4. SEE SHEET C3 FOR EROSION AND SEDIMENT CONTROL PLAN.

KEY NOTES

1. INSTALL RIP-RAP IN ACCORDANCE WITH WISDOT STANDARD SPEC SECTION 606 - RIPRAP AND FILTER BLANKET.
2. INSTALL RIP-RAP AT FES LOCATIONS IN ACCORDANCE WITH WISDOT STANDARD SPEC SECTION 606 - RIPRAP AND FILTER BLANKET.
3. INSTALL ACCESSIBLE PEDESTRIAN RAMP. SEE DETAILS 1/C2 AND 2/C2 .
4. PROPOSED 4 FOOT WIDE CONCRETE VALLEY GUTTER
5. SIDE WALK TO TIP AWAY FROM BUILDING AT A MINIMUM OF 1.8% UNLESS NOTED OTHERWISE
6. PEDESTRIAN CROSS WALK. MAINTAIN CROSS SLOPE OF 2.0% MAXIMUM. SEE ARCHITECTURE PLANS FOR MORE DETAILS.
7. INSTALL RAMP FOR DUMPSTER ACCESS.

HTG architects

www.htg-architects.com
Minneapolis
Bismarck

1010 Mainstreet, Suite 100
Hopkins, MN. 55343
Tel: 952.278.8880

PROJECT

MAYO EMPLOYEES CREDIT UNION

ADDITION/REMODELING

LA CROSSE, WI

ISSUED SET MARCH 27, 2026

REVISIONS

DATE	NO.	

I HEREBY CERTIFY THAT THIS PLAN, SPECIFICATION OR REPORT WAS PREPARED BY ME OR UNDER MY DIRECT SUPERVISION, AND THAT I AM A DULY LICENSED ENGINEER UNDER THE LAWS OF THE STATE OF WISCONSIN.

NOT FOR CONSTRUCTION

ERIC SAUTBINE, P.E.

E-43034-6 — REG. NO.

03/27/2026 — DATE

ANDERSON
13605 1st Avenue N. #100
Plymouth, MN 55441 | ae-mn.com
P 763.412.4000 | F 763.412.4090
Anderson Engineering of Minnesota, LLC

GRADING & DRAINAGE PLAN

DRAWN BY: BN CHECKED BY: BF

C2

231139 - AE PROJ # 18994

COPYRIGHT © BY HTG ARCHITECTS

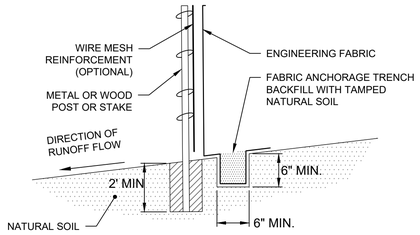

NOTE: DEPENDING UPON CONFIGURATION, ATTACH FABRIC TO WIRE MESH WITH HOG RINGS, STEEL POSTS WITH TIE WIRES, OR WOOD POSTS WITH STAPLES.

5 TYPICAL SILT FENCE DETAIL

SCALE:N.T.S.

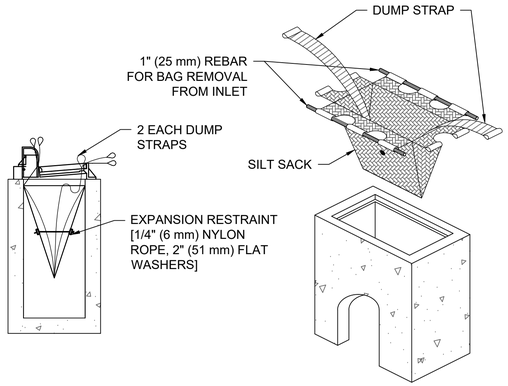

6 TYPICAL INLET PROTECTION DETAIL

SCALE:N.T.S.

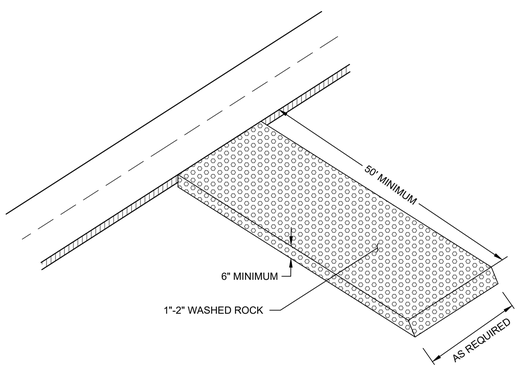

7 ROCK CONSTRUCTION ENTRANCE DETAIL

SCALE:N.T.S.

STORMWATER POLLUTION PREVENTION PLAN SCHEDULE OF INSTALLATION & MAINTENANCE

ITEM	INSTALLATION	INSPECTION & MAINTENANCE	REMOVAL
SILT FENCE	PRIOR TO COMMENCEMENT OF EARTHWORK OPERATIONS.	INSPECT & MAINT. AFTER EACH RUN-OFF EVENT. REMOVE SEDIMENTS AS REQUIRED.	AFTER TRIBUTARY DRAINAGE AREA IS RESTORED.
ROCK CONST. ENTRANCE	PRIOR TO COMMENCEMENT OF EARTHWORK OPERATIONS.	INSPECT REGULARLY. MAINTAIN AS NEEDED.	PRIOR TO PAVING.
SEED & MULCH	AFTER POND GRADING IS COMPLETED.	INSPECT & MAINTAIN AFTER HEAVY RAINS. REPLACE WASH-OUT AREAS IMMEDIATELY	NO REMOVAL NECESSARY.
INLET PROTECTION	UPON INLET CONSTRUCTING	WHEN 1/3 CAPACITY OF BMP IS REACHED	AFTER TRIBUTARY AREAS ARE FULLY RESTORED

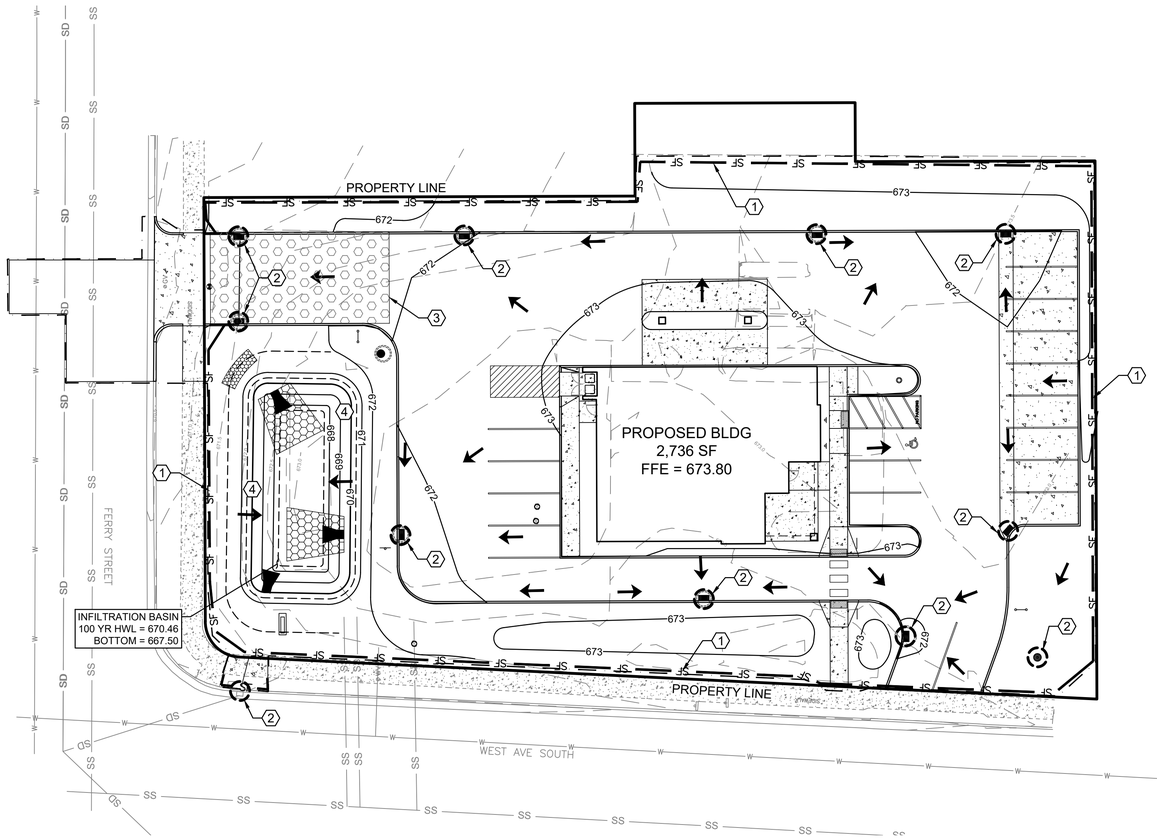

EROSION CONTROL NOTES

1. POST WDNR CERTIFICATE OF PERMIT COVERAGE ON SITE AND MAINTAIN UNTIL CONSTRUCTION ACTIVITIES HAVE CEASED, THE SITE IS STABILIZED, AND A NOTICE OF TERMINATION IS FILED WITH WDNR.
2. KEEP A COPY OF THE CURRENT EROSION CONTROL PLAN ON SITE THROUGHOUT THEDURATION OF THE PROJECT.
3. SUBMIT PLAN REVISIONS OR AMENDMENTS TO THE WDNR AT LEAST 5 DAYS PRIOR TO FIELD IMPLEMENTATION.
4. THE CONTRACTOR IS RESPONSIBLE FOR ROUTINE SITE INSPECTIONS AT LEAST ONCE EVERY 7 DAYS AND WITHIN 24 HOURS AFTER A RAINFALL EVENT OF 0.5 INCHES OR GREATER. KEEP INSPECTION REPORTS ON-SITE AND MAKE THEM AVAILABLE UPON REQUEST.
5. INSPECT AND MAINTAIN ALL INSTALLED EROSION CONTROL PRACTICES UNTIL THE CONTRIBUTING DRAINAGE AREA HAS BEEN STABILIZED.
6. WHEN POSSIBLE: PRESERVE EXISTING VEGETATION (ESPECIALLY ADJACENT TO SURFACE WATERS), MINIMIZE LAND-DISTURBING CONSTRUCTION ACTIVITY ON SLOPES OF 20% OR MORE, MINIMIZE SOIL COMPACTION, AND PRESERVE TOPSOIL.
7. REFER TO THE WDNR STORMWATER CONSTRUCTION TECHNICAL STANDARDS AT http://dnr.wi.gov/topic/stormwater/standards/const_standards.html.
8. INSTALL PERIMETER EROSION CONTROLS AND ROCK TRACKING PAD CONSTRUCTION ENTRANCE(S) PRIOR TO ANY LAND-DISTURBING ACTIVITIES, INCLUDING CLEARING AND GRUBBING. USE WDNR TECHNICAL STANDARD STONE TRACKING PAD AND TIRE WASHING #1057 FOR ROCK CONSTRUCTION ENTRANCE(S).
9. INSTALL INLET PROTECTION PRIOR TO LAND-DISTURBING ACTIVITIES IN THE CONTRIBUTING DRAINAGE AREA AND/OR IMMEDIATELY UPON INLET INSTALLATION. COMPLY WITH WDNR TECHNICAL STANDARD STORM DRAIN INLET PROTECTION FOR CONSTRUCTION SITES #1060.
10. STAGE CONSTRUCTION GRADING ACTIVITIES TO MINIMIZE THE CUMMULATIVE EXPOSED CONDUCT TEMPORARY GRADING FOR EROSION CONTROL PER WDNR TECHNICAL STANDARD TEMPORARY GRADING PRACTICES FOR EROSION CONTROL #1067.
11. PERMITTING OF GROUNDWATER DEWATERING IS THE RESPONSIBILITY OF THE CONTRACTOR. GROUNDWATER DEWATERING IS SUBJECT TO A DNR WASTEWATER DISCHARGE PERMIT AND A DNR HIGH CAPACITY WELL APPROVAL IF CUMULATIVE PUMP CAPACITY IS 70 GPM OR MORE. (Rev. February 2017)
12. PROVIDE ANTI-SCOUR PROTECTION AND MAINTAIN NON-EROSIVE FLOW DURING DEWATERING. PERFORM DEWATERING OF ACCUMULATED SURFACE RUNOFF IN ACCORDANCE WITH WDNR TECHNICAL STANDARD DE-WATERING #1061. (Rev. February
13. COMPLETE AND STABILIZE SEDIMENT BASINS/TRAPS OR WET PONDS PRIOR TO MASS LAND DISTURBANCE TO CONTROL RUNOFF DURING CONSTRUCTION. REMOVE SEDIMENT AS NEEDED TO MAINTAIN 3 FEET OF DEPTH TO THE OUTLET, AND PROPERLY DISPOSE OF SEDIMENT REMOVED DURING MAINTENANCE (REFER TO NR 528). CONSTRUCT AND MAINTAIN THE SEDIMENT BASIN PER WDNR TECHNICAL STANDARD SEDIMENT BASIN #1064 AND SEDIMENT TRAP # 1063.
14. CONSTRUCT AND PROTECT THE BIOINFILTRATION BASIN AND VEGETATION FROM RUNOFF AND SEDIMENT DURING CONSTRUCTION. REFERENCE THE WDNR TECHNICAL STANDARD BIORETENTION FOR INFILTRATION # 1004.
15. INSTALL AND MAINTAIN SILT FENCING PER WDNR TECHNICAL STANDARD SILT FENCE #1056. REMOVE SEDIMENT FROM BEHIND SILT FENCES AND SEDIMENT BARRIERS BEFORE SEDIMENT REACHES A DEPTH THAT IS EQUAL TO ONE-HALF OF THE FENCE AND/OR BARRIER HEIGHT.
16. REPAIR BREAKS AND GAPS IN SILT FENCES AND BARRIERS IMMEDIATELY. REPLACE DECOMPOSING STRAW BALES (TYPICAL BALE LIFE IS 3 MONTHS). LOCATE, INSTALL, AND MAINTAIN STRAW BALES PER WDNR TECHNICAL STANDARD DITCH CHECKS #1062.
17. INSTALL AND MAINTAIN FILTER SOCKS IN ACCORDANCE WITH WDNR TECHNICAL STANDARD INTERIM MANUFACTURED PERIMETER CONTROL AND SLOPE INTERRUPTION PRODUCTS # 1071.
18. IMMEDIATELY STABILIZE STOCKPILES AND SURROUND STOCKPILES AS NEEDED WITH SILT FENCE OR OTHER PERIMETER CONTROL IF STOCKPILES WILL REMAIN INACTIVE FOR 7 DAYS OR LONGER.
19. IMMEDIATELY STABILIZE ALL DISTURBED AREAS THAT WILL REMAIN INACTIVE FOR 14 DAYS OR LONGER. BETWEEN SEPTEMBER 15 AND OCTOBER 15: STABILZE WITH MULCH, TACKIFIER, AND A PERENNIAL SEED MIXED WITH WINTER WHEAT, ANNUAL OATS, OR ANNUAL RYE, AS APPROPRIATE FOR REGION AND SOIL TYPE OCTOBER 15 THROUGH COLD WEATHER: STABILIZE WITH A POLYMER AND DORMANT SEED MIX, AS APPROPRIATE FOR REGION AND SOIL TYPE.
20. STABILIZE AREAS OF FINAL GRADING WITHIN 7 DAYS OF REACHING FINAL GRADE.
21. SWEEP/CLEAN UP ALL SEDIMENT/TRASH THAT MOVES OFF-SITE DUE TO CONSTRUCTION ACTIVITY OR STORM EVENTS BEFORE THE END OF THE SAME WORKDAY OR AS DIRECTED BY THE CITY OR OWNER. SEPARATE SWEPT MATERIALS (SOILS AND TRASH) AND DISPOSE OF APPROPRIATELY.
22. THE CONTRACTOR IS RESPONSIBLE FOR CONTROLLING DUST PER WDNR TECHNICAL STANDARD DUST CONTROL ON CONSTRUCTION SITES # 1068.
23. PROPERLY DISPOSE OF ALL WASTE AND UNUSED BUILDING MATERIALS (INCLUDING GARBAGE, DEBRIS, CLEANING WASTES, OR OTHER CONSTRUCTION MATERIALS) AND DO NOT ALLOW THESE MATERIALS TO BE CARRIED BY RUNOFF INTO THE RECEIVING CHANNEL.
24. COORDINATE WITH THE OWNER TO UPDATE THE LAND DISTURBANCE PERMIT TO INDICATE THE ANTICIPATED OR LIKELY DISPOSAL LOCATIONS FOR ANY EXCAVATED SOILS OR CONSTRUCTION DEBRIS THAT WILL BE HAULED OFF-SITE FOR DISPOSAL. THE DEPOSITED OR STOCKPILED MATERIAL NEEDS TO INCLUDE PERIMETER SEDIMENT CONTROL MEASURES (SUCH AS SILT FENCE, HAY BALES, FILTER SOCKS, OR COMPACTED EARTHEN BERMS).
25. FOR NON-CHANNELIZED FLOW ON DISTURBED OR CONSTRUCTED SLOPES, PROVIDE CLASS [SPECIFY CLASS I, II, OR III] TYPE [SPECIFY TYPE A, B, OR C] EROSION CONTROL MATTING. SELECT EROSION MATTING FROM APPROPRITE MATRIX IN WDOT'S WIDOT PRODUCT ACCEPTABILITY LIST (PAL); INSTALL AND MAINTAIN PER WDNR TECHNICAL STANDARD NON-CHANNEL EROSION MAT #1052.
26. FOR CHANNELIZED FLOW ON DISTURBED OR CONSTRUCTED AREAS, PROVIDE CLASS [SPECIFY CLASS I, II, OR III] TYPE [SPECIFY TYPE A, B, OR C] EROSION CONTROL MATTING. SELECT EROSION MATTING FROM APPROPRIATE MATRIX IN WDOT'S WIDOT PRODUCT ACCEPTABILITY LIST (PAL); INSTALL AND MAINTAIN PER WDNR TECHNICAL STANDARD CHANNEL EROSION MAT #1053.
27. MAKE PROVISIONS FOR WATERING DURING THE FIRST 8 WEEKS FOLLOWING SEEDING OR PLANTING OF DISTURBED AREAS WHENEVER MORE THAN 7 CONSECUTIVE DAYS OF DRY WEATHER OCCUR.
28. THE CONTRACTOR IS RESPONSIBLE FOR COMPLYING WITH ALL APPLICABLE WDNR REMEDIATION AND WASTE WATER MANAGEMENT REQUIREMENTS FOR HANDLING AND DISPOSING OF CONTAMINATED MATERIALS. SITE SPECIFIC INFORMATION FOR AREAS WITH KNOWN OR SUSPECTED SOIL AND/OR GROUNDWATER CONTAMINATION CAN BE FOUND ON WDNR'S BUREAU OF REMEDIATION AND REDEVELOPMENT TRACKING SYSTEM (BRRTS) PUBLIC DATABASE AT: https://dnr.wi.gov/botw
29. REFER TO THE SPILL PLAN IF THERE IS A DISCHARGE OF SEDIMENT AND/OR OTHER CONTAMINANTS. A SPILL PLAN IS REQUIRED IF THERE IS POTENTIAL TO DISCHARGE CONTAMINANTS TO WATERS OF THE STATE.
30. REFER TO THE FRAC OUT SPILL PLAN IF AN INADVERTENT DISCHARGE OF DRILLING FLUIDS ("FRAC OUT") OCCURS.. A SPILL PLAN IS REQUIRED IF THERE IS POTENTIAL TO DISCHARGE CONTAMINANTS TO WATERS OF THE STATE.
31. INSTALL AND MAINTAIN A CONCRETE WASHOUT BASIN PER EPA 833-F-11-006: https://www3.epa.gov/npdes/pubs/concretewashout.pdf. REQUIRE USE BY ALL CONCRETE CONTRACTORS. LIQUID MAY BE REUSED IN CONCRETE MIXING, EVAPORATED, OR DISPOSED OF AS WASTEWATER.

0 20' 40'

LEGEND

- PROPERTY LIMITS
- CONSTRUCTION LIMITS
- 1189 EXISTING MINOR CONTOUR
- 1190 EXISTING MAJOR CONTOUR
- 1189 PROPOSED MINOR CONTOUR
- 1190 PROPOSED MAJOR CONTOUR
- DRAINAGE ARROW
- SF SILT FENCE
- INLET PROTECTION
- ROCK ENTRANCE
- BIO-ROLL

KEY NOTES

1. INSTALL AND MAINTAIN SILT FENCE PERIMETER SEDIMENT PROTECTION IN TURF AREAS. USE BIO-ROLLS AS NEED IN PAVED AREAS.
2. INSTALL AND MAINTAIN INLET SEDIMENT PROTECTION.
3. INSTALL TEMP ROCK ENTRANCE OR HARD SURFACE ASPHALT/CONCRETE AT CONSTRUCTION INGRESS & EGRESS LOCATION PRIOR TO EXCAVATION. MAINTAIN THROUGHOUT THE ENTIRE CONSTRUCTION PROCESS.
4. INSTALL EROSION CONTROL BLANKET AND SEED ON FILTRATION BASIN SIDE SLOPES. INSTALL EROSION CONTROL BLANKET IN DITCH.

HTG architects

www.htg-architects.com
Minneapolis
Bismarck

1010 Mainstreet, Suite 100
Hopkins, MN. 55343
Tel: 952.278.8880

PROJECT

MAYO EMPLOYEES CREDIT UNION

ADDITION/REMODELING

LA CROSSE, WI

ISSUED SET MARCH 27, 2026
REVISIONS

DATE	NO.	

I HEREBY CERTIFY THAT THIS PLAN, SPECIFICATION OR REPORT WAS PREPARED BY ME OR UNDER MY DIRECT SUPERVISION, AND THAT I AM A DULY LICENSED ENGINEER UNDER THE LAWS OF THE STATE OF WISCONSIN.

NOT FOR CONSTRUCTION

ERIC SAUTBINE, P.E.

E-43034-6 03/27/2026
REG. NO. DATE

ANDERSON
13605 1st Avenue N. #100
Plymouth, MN 55441 | ae-mn.com
P 763.412.4000 | F 763.412.4090
Anderson Engineering of Minnesota, LLC

EROSION & SEDIMENT CONTROL PLAN

DRAWN BY: BN CHECKED BY: BF

C3

231139 - AE PROJ # 18994

COPYRIGHT © BY HTG ARCHITECTS

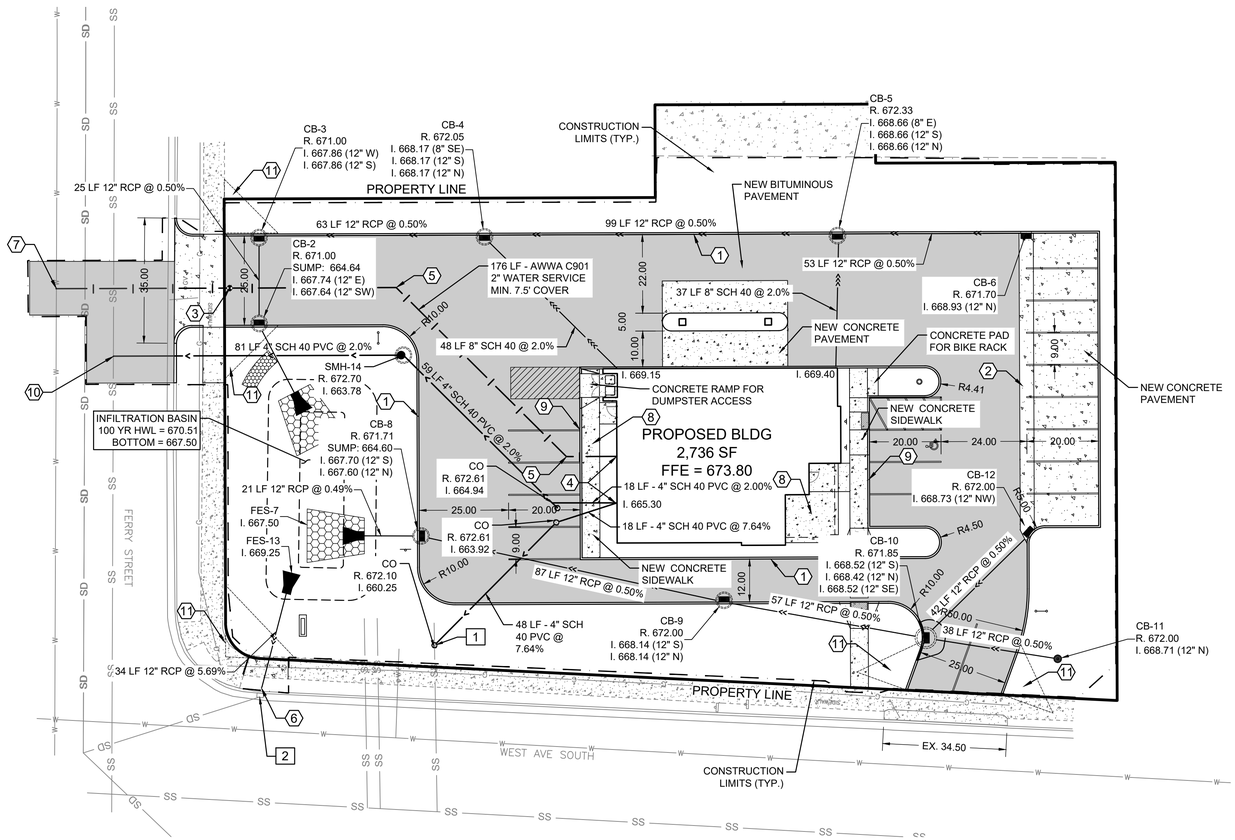

BID ALTERNATES

1 CONNECT NEW BUILDING SANITARY SERVICE TO EXISTING SANITARY SERVICE STUB AT ELEVATION 660.25±

2 RECONSTRUCT CITY CATCH BASIN IN STREET WITH NEW 48" MANHOLE TO FIT NEW 12" PIPE FROM EAST AND EXISTING 12" PIPE TO NORTHWEST. REMOVE AND REPLACE BITUMINOUS ROADWAY SURFACE AS REQUIRED.

STRUCTURE SCHEDULE

STRUCTURE NO.	SIZE	CASTING & NOTES (NEEHAN)
FES–1	12" ROUND	INSTALL RIP–RAP AND TRASH GUARD
CB–2	48" ROUND	R–3067–V
CB–3	48" ROUND	R–3067–V
CB–4	48" ROUND	R–3067–V
CB–5	48" ROUND	R–3067–V
CB–6	2'X3' REC	R–3067–V
FES–7	12" ROUND	INSTALL RIP–RAP AND TRASH GUARD
CB–8	48" ROUND	R–3067–V
CB–9	48" ROUND	R–3067–V
CB–10	60" ROUND	R–3067–V
CB–11	48" ROUND	R–2501
CB–12	2'X3' REC	R–3067–V
FES–13	12" ROUND	INSTALL TRASH GUARD
SMH–14	48" ROUND	R–1642–SOLID "SANITARY"

0 20' 40'

LEGEND

- PROPERTY LIMITS
- CONSTRUCTION LIMITS
- BITUMINOUS PAVMENT
- CONCRETE WALK / PAVEMENT
- EXISTING WATERMAIN
- EXISTING SANITARY SEWER
- EXISTING STORM SEWER
- PROPOSED WATERMAIN
- PROPOSED SANITARY SEWER
- PROPOSED STORM SEWER
- PROPOSED STORM INLETS

KEY NOTES

1. PROPOSED STANDARD CONCRETE CURB & GUTTER. SEE DETAIL 12/C5.
2. PROPOSED 4 FOOT WIDE CONCRETE VALLEY GUTTER. SEE DETAIL 7/C5.
3. INSTALL NEW 2" CURB STOP. CONTRACTOR TO VERIFY EXISTING SERVICE SIZE.
4. UTILITY SERVICE LOCATION. VERIFY EXACT LOCATION WITH MECHANICAL PLAN OR MASTER PLUMBER PRIOR TO INSTALLATION.
5. INSTALL 45° BEND AS SHOWN
6. CONNECT TO EXISTING MANHOLE VIA CORE DRILL AT ELEVATION 667.32±. REMOVE AND REPLACE CONCRETE WALK WITHIN ROW PER CITY STANDARDS.
7. CONNECT TO EXISTING WATERMAIN VIA SADDLE AND WET TAP.
8. CONCRETE WALK TO BE INSTALLED WITH SNOW MELT SYSTEM. SEE MECHANICAL FOR DETAILS.
9. CONCRETE SIDEWALK AND CONCRETE GUTTER TO BE ONE MONOLITHIC POUR. SEE DETAIL 10/C5 AND 11/C5.
10. CONNECT TO TOP OF EXISTING SANITARY SEWER USING A LATERAL RISER. SEE DETAIL 5/C5. RISER HEIGHT APPROX. 2.0'. EX. 12" INV = 658.80±.
11. SIGHT TRIANGLE. 15' AT DRIVEWAYS. 20' AT STREET INTERSECTIONS.

GENERAL NOTES

1. ALL CONSTRUCTION SHALL COMPLY WITH RECOMMENDATIONS OF THE GEOTECHNICAL ENGINEER AND PER THE GEOTECHNICAL REPORT UNLESS DIRECTED OTHERWISE.
2. ALL CONSTRUCTION SHALL COMPLY WITH THE CURRENT EDITION OF THE WISDOT STANDARD SPECIFICATIONS FOR HIGHWAY AND STRUCTURE CONSTRUCTION, UNLESS DIRECTED OTHERWISE.
3. ALL CONSTRUCTION SHALL COMPLY WITH APPLICABLE MUNICIPAL, WATERSHED DISTRICT, COUNTY, DEPT. OF HEALTH, AND WISDOT PERMITS. VERIFY RECEIPT OF ALL REQUIRED PERMITS PRIOR TO CONSTRUCTION.
4. EXISTING TOPOGRAPHIC AND UTILITY INFORMATION PROVIDED BY THE OWNER ON A SURVEY PREPARED BY REAL LAND SURVEYING. BE ADVISED THAT THE LOCATION AND TYPE OF EXISTING UTILITIES SHOWN ON THE PLANS ARE FOR GENERAL INFORMATION ONLY. THE INFORMATION IS NOT WARRANTED TO BE ACCURATE OR COMPLETE. THE CONTRACTOR, IN COOPERATION WITH THE APPROPRIATE UTILITY COMPANY OR MUNICIPALITY, IS RESPONSIBLE FOR VERIFYING THE LOCATION, SIZE, AND DEPTH OF ALL UNDERGROUND UTILITIES.
5. ALL HANDICAPPED STALLS AND ACCESS RAMPS SHALL COMPLY WITH CURRENT ADA STANDARDS. SEE ARCHITECTURAL PLANS FOR EXACT LOCATION OF BUILDING ENTRANCES.
6. WATER LINES ARE REQUIRED TO BE INSTALLED AT 7.5 FEET MINIMUM DEPTH AND PROVIDE MINIMUM 10' HORIZONTAL AND 18" VERTICAL SEPARATION OF ALL WATERMAIN CROSSINGS FROM STORM OR SANITARY SEWER. WATERMAIN TO BE INSULATED STATE SPECIFICATIONS, WHERE COVER DEPTHS CANNOT BE ACHIEVED. CONTRACTOR SHALL CONTACT THE ENGINEER IF THERE ARE AREAS WHERE MINIMUM COVER DEPTH CANNOT BE MET.
7. WATER SERVICE MATERIALS SHALL BE AWWA C901. CONTRACTOR SHALL VERIFY SERVICE SIZE AND MATERIALS PRIOR TO CONSTRUCTION.
8. SANITARY SEWER PIPE MATERIALS SHALL BE SCH 40 PVE. PIPE SHALL BE INSULATED PER STATE STANDARDS WHERE 7.5 FOOT COVER DEPTHS ARE NOT ACHIEVED.
9. ALL JOINTS AND CONNECTIONS IN THE STORM SEWER SYSTEM SHALL BE WATER TIGHT. APPROVED RESILIENT RUBBER JOINTS MUST BE USED MEETING ASTM F2510 TO MAKE WATER TIGHT CONNECTIONS TO MANHOLES AND CATCH BASINS. DO NOT GROUT OVER FLEXIBLE CONNECTIONS TO MANHOLES.
10. CONTRACTOR TO PROVIDE TRACER WIRE FOR ALL NON-METALLIC PIPE PER CITY OF LA CROSSE STANDARDS.
11. STORM SEWER TO BE RCP CONFORMING TO ASTM C76 CLASS III MINIMUM UNLESS NOTED OTHERWISE. JOINTS SHALL BE RUBBER GASKETED BELL AND SPIGOT MEETING ASTM C443. PIPE SHALL BE MANUFACTURED BY A NPCA OR ACPA CERTIFIED PLANT.
12. INSTALL PER WISDOT STANDARD SPECIFICATIONS SECTION 520 AND APPLICABLE STANDARD DETAIL DRAWINGS. PROVIDE CLASS B BEDDING MINIMUM UNLESS OTHERWISE SHOWN. COMPACT GRANULAR BACKFILL TO 95% STANDARD PROCTOR WITHIN THE PIPE ZONE. M AINTAIN LINE AND GRADE. WATERTIGHT JOINTS REQUIRED.

HTG architects
www.htg-architects.com
Minneapolis
Bismarck
1010 Mainstreet, Suite 100
Hopkins, MN. 55343
Tel: 952.278.8880

PROJECT

MAYO EMPLOYEES CREDIT UNION

ADDITION/REMODELING

LA CROSSE, WI

ISSUED SET MARCH 27, 2026
REVISIONS
DATE NO.

I HEREBY CERTIFY THAT THIS PLAN, SPECIFICATION OR REPORT WAS PREPARED BY ME OR UNDER MY DIRECT SUPERVISION, AND THAT I AM A DULY LICENSED ENGINEER UNDER THE LAWS OF THE STATE OF WISCONSIN.

NOT FOR CONSTRUCTION

ERIC SAUTBINE, P.E.

E-43034-6 03/27/2026
REG. NO. DATE

ANDERSON
13605 1st Avenue N. #100
Plymouth, MN 55441 | ae-mn.com
P 763.412.4000 | F 763.412.4090
Anderson Engineering of Minnesota, LLC

UTILITY & PAVING PLAN

DRAWN BY: BN CHECKED BY: BF

C4

231139 - AE PROJ # 18994

COPYRIGHT © BY HTG ARCHITECTS

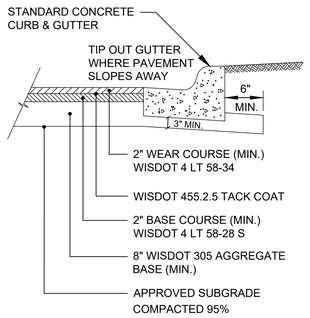

NOTE:

1. VERIFY PAVEMENT SECTION DESIGN AND SUBGRADE REQUIREMENTS WITH GEOTECHNICAL REPORT AND RECOMMENDATIONS PRIOR TO CONSTRUCTION.

1 BITUMINOUS PAVEMENT SECTION

SCALE:N.T.S.

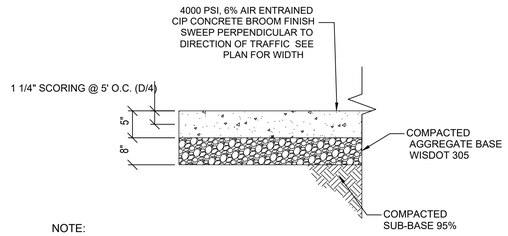

NOTE:

1. VERIFY PAVEMENT SECTION DESIGN AND SUBGRADE REQUIREMENTS WITH GEOTECHNICAL REPORT AND RECOMMENDATIONS PRIOR TO CONSTRUCTION.
2. FIELD VERIFY EXISTING PAVEMENT SECTION UNKOWN IF SUND LIFT IS PROVIDED IN EXISTING CONDITIONS PROVIDE ALTERNATE BID PRICE FOR 12" SUND LIFT UNDER AGGREGATE BASE.

2 CONCRETE PAVEMENT SECTION

SCALE:N.T.S.

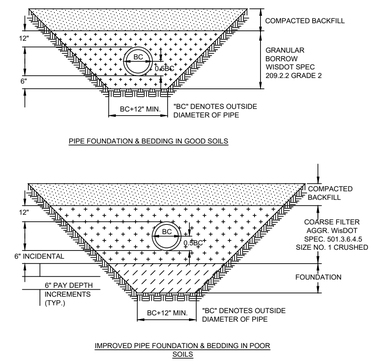

3 PVC SEWER BEDDING

SCALE:N.T.S.

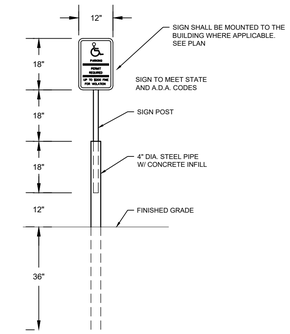

4 ACCESSIBLE PARKING SIGN

SCALE:N.T.S.

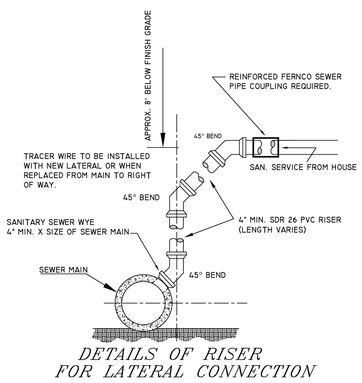

NOTE: SEE CITY OF LA CROSSE DETAIL SHEET D-6 FOR MORE INFORMATION.

5 SANITARY RISER CONNECTION

SCALE:N.T.S.

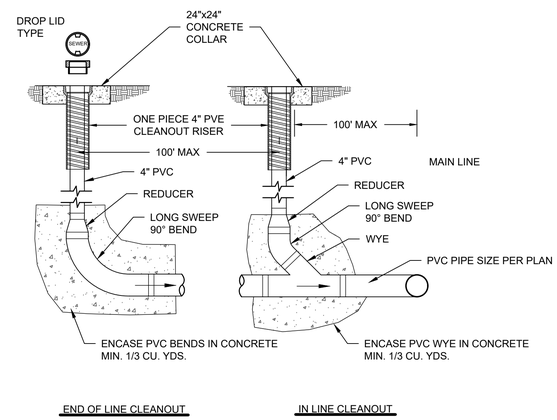

6 ROOF DRAIN CLEANOUT DETAIL

SCALE:N.T.S.

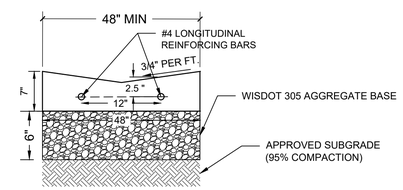

NOTE: GUTTER AGGREGATE BASE TO BE MIN. 6" DEPTH AND EXTEND 1' BEYOND EACH SIDE OF GUTTER.

7 CONCRETE VALLEY GUTTER

SCALE:N.T.S.

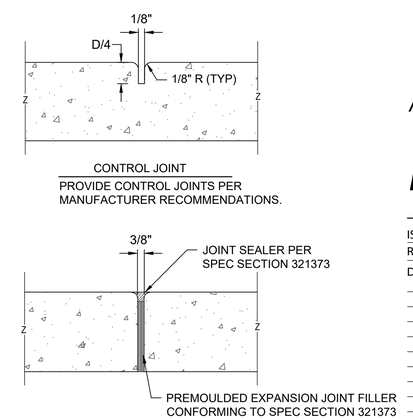

8 JOINTING DETAIL

SCALE:N.T.S.

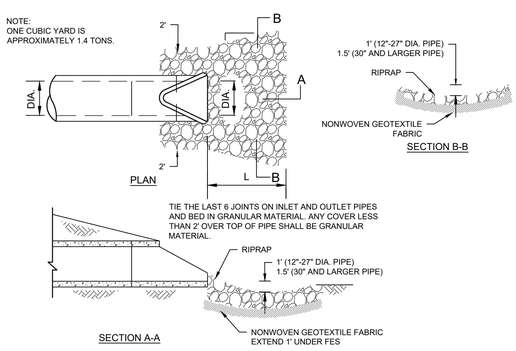

9 FLARED END SECTION

SCALE:N.T.S.

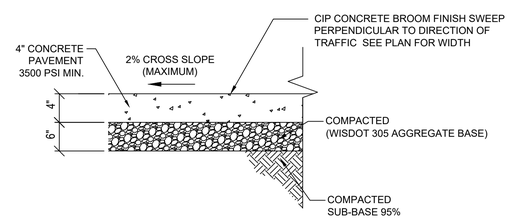

10 CONCRETE WALK SECTION

SCALE:N.T.S.

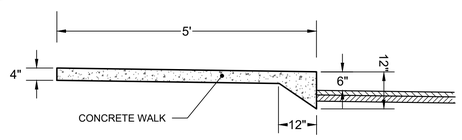

11 MONOLITHIC CURB AND SIDEWALK

SCALE:N.T.S.

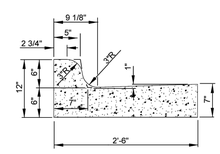

NOTE: SEE CITY OF LA CROSSE DETAIL SHEET D-1-1 FOR MORE INFORMATION.

12 STANDARD CURB AND GUTTER SECTION

SCALE:N.T.S.

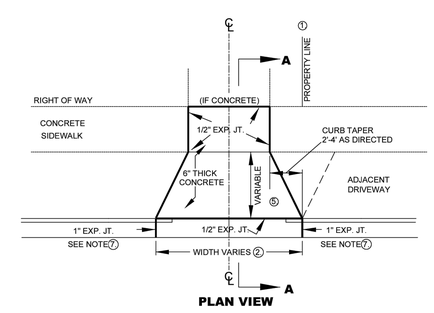

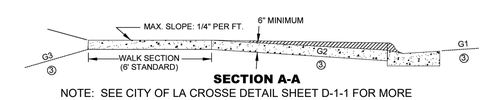

NOTE: SEE CITY OF LA CROSSE DETAIL SHEET D-1-1 FOR MORE INFORMATION.

13 SRANDARD DRIVEWAY DETAIL

SCALE:N.T.S.

HTG architects

www.htg-architects.com
Minneapolis
Bismarck

1010 Mainstreet, Suite 100
Hopkins, MN. 55343
Tel: 952.278.8880

PROJECT

MAYO EMPLOYEES CREDIT UNION

ADDITION/REMODELING

LA CROSSE, WI

ISSUED SET MARCH 27, 2026

REVISIONS

DATE	NO.	

I HEREBY CERTIFY THAT THIS PLAN, SPECIFICATION OR REPORT WAS PREPARED BY ME OR UNDER MY DIRECT SUPERVISION, AND THAT I AM A DULY LICENSED ENGINEER UNDER THE LAWS OF THE STATE OF WISCONSIN.

NOT FOR CONSTRUCTION

ERIC SAUTBINE, P.E.

E-43034-6 03/27/2026
REG. NO. DATE

ANDERSON
13605 1st Avenue N., #100
Plymouth, MN 55441 | ae-mn.com
P 763.412.4000 | F 763.412.4090
Anderson Engineering of Minnesota, LLC

CIVIL DETAILS

DRAWN BY: BN CHECKED BY: BF

C5

231139 - AE PROJ # 18994

COPYRIGHT © BY HTG ARCHITECTS

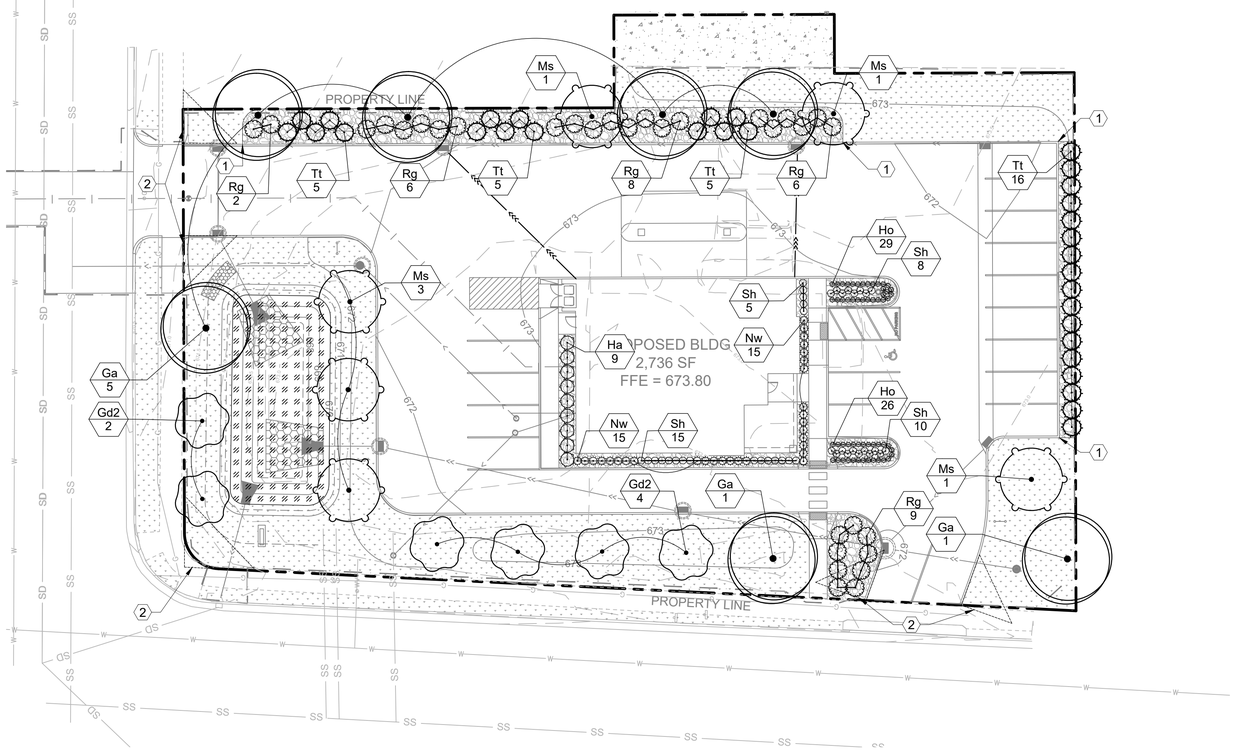

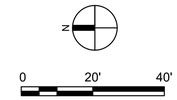

LEGEND

- PROPERTY LIMITS
- 966 — PROPOSED MINOR CONTOUR
- 965 — PROPOSED MAJOR CONTOUR
- SOD WITH IRRIGATION
- WET DETENTION SEED MIX
- 3" DEEP ROCK MULCH W/ LANDSCAPE FABRIC
- METAL EDGER

NOTES

1. PER CITY OF LA CROSSE, IRRIGATION IS REQUIRED.
2. IF A DISCREPANCY IS FOUND, THE PLANTING PLAN SHALL OVERRIDE THE PLANT SCHEDULE.
3. SEE CIVIL SHEETS FOR EROSION CONTROL BLANKET LOCATIONS.

KEY NOTES

1. START / STOP METAL EDGER
2. SIGHT TRIANGLE. 15' AT DRIVEWAYS. 20' AT STREET INTERSECTIONS.

CITY OF LA CROSSE LANDSCAPE REQUIREMENTS:

SITE SF NOT OCCUPIED BY BUILDINGS OR PAVED SURFACES = 12,265 SF

REQUIREMENTS	CALCULATION	REQUIRED	PROVIDED
BOULEVARD TREES	374 LF / 40	9.35 TREES	10 TREES
SITE TREES	(12,265 SF / 600) * 2	40.8 TREES	41 TREES
SITE SHRUBS	(12,265 SF / 600) * 8	163.5 SHRUBS	164 SHRUBS

ONE TREE PLACED IN THE BOULEVARD PER 40 LINEAR FEET OF LOT FRONTAGE.

NOT LESS THAN TWO TREES AND EIGHT SHRUBS PER 600 SQUARE FEET OF LANDSCAPED AREA.

PROVIDE A FIVE-TO-SIX FOOT TALL SOLID SCREEN TO SEPARATE PARKING LOTS FROM ABUTTING RESIDENTIAL USES.

PLANT SCHEDULE

SYMBOL	CODE	QTY	COMMON / BOTANICAL NAME	CONT.	SIZE
DECIDUOUS TREES					
	Ga	7	AUTUMN GOLD MAIDENHAIR TREE GINKGO BILOBA 'AUTUMN GOLD'	B&B	2" CAL.
	Gd2	6	STREET KEEPER® HONEY LOCUST GLEDITSIA TRIACANTHOS INERMIS 'DRAVES'	B&B	2" CAL.
EVERGREEN TREES					
	Tt	32	TECHNY ARBORVITAE THUJA OCCIDENTALIS 'TECHNY'	B&B	5` HT.
ORNAMENTAL TREES					
	Ms	6	SPRING SNOW CRABAPPLE MALUS X 'SPRING SNOW'	B&B	2" CAL.

SYMBOL	CODE	QTY	COMMON / BOTANICAL NAME	CONT	SIZE
DECIDUOUS SHRUBS					
	Ha	9	ANNABELLE HYDRANGEA HYDRANGEA ARBORESCENS 'ANNABELLE'	CONT.	5 GAL.
	Rg	31	GRO-LOW FRAGRANT SUMAC RHUS AROMATICA 'GRO-LOW'	CONT.	5 GAL.
PERENNIALS					
	Ho	55	STELLA DE ORO DAYLILY HEMEROCALLIS X 'STELLA DE ORO'	CONT.	1 GAL.
	Nw	30	WALKER'S LOW CATMINT NEPETA X FAASSENII 'WALKER'S LOW'	CONT.	1 GAL.
	Sh	39	PRAIRIE DROPSEED SPOROBOLUS HETEROLEPIS	CONT.	1 GAL.

HTG architects

www.htg-architects.com
Minneapolis
Bismarck

1010 Mainstreet, Suite 100
Hopkins, MN. 55343
Tel: 952.278.8880

PROJECT

MAYO EMPLOYEES CREDIT UNION

ADDITION/REMODELING

LA CROSSE, WI

ISSUED SET MARCH 27, 2026
REVISIONS

DATE	NO.	

I HEREBY CERTIFY THAT THIS PLAN, SPECIFICATION OR REPORT WAS PREPARED BY ME OR UNDER MY DIRECT SUPERVISION, AND THAT I AM A DULY LICENSED ENGINEER UNDER THE LAWS OF THE STATE OF WISCONSIN.

NOT FOR CONSTRUCTION

ERIC SAUTBINE, P.E.

E-43034-6 — REG. NO.
03/27/2026 — DATE

ANDERSON
13605 1st Avenue N. #100
Plymouth, MN 55441 | ae-mn.com
P 763.412.4000 | F 763.412.4090
Anderson Engineering of Minnesota, LLC

RESTORATION PLAN

DRAWN BY: JS CHECKED BY: CC

L1

231139 - AE PROJ # 18994

COPYRIGHT © BY HTG ARCHITECTS

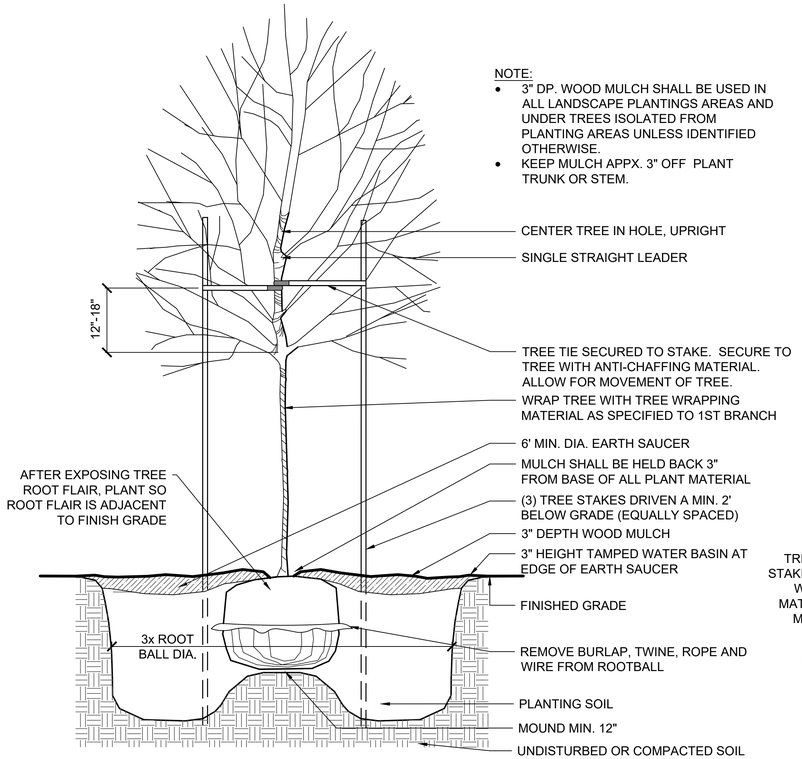

1 DECIDUOUS TREE PLANTING DETAIL
SCALE:N.T.S.

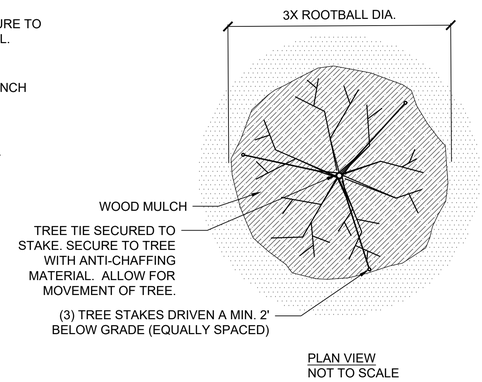

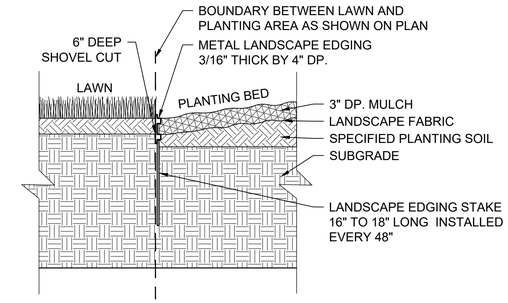

3 METAL EDGER DETAIL
SCALE:N.T.S.

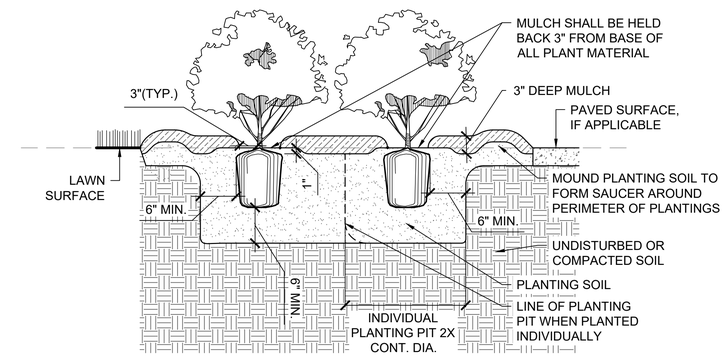

4 DECIDUOUS SHRUB PLANTING DETAIL
SCALE:N.T.S.

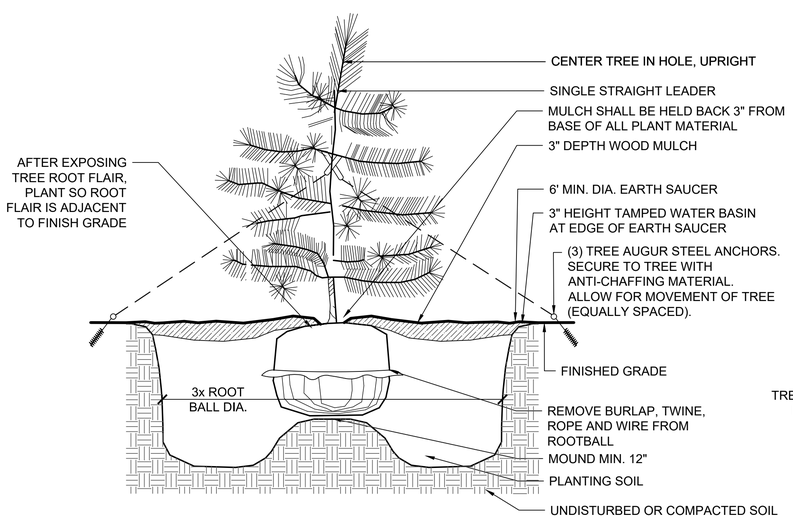

NOTE:
- 3" DP. WOOD MULCH SHALL BE USED IN ALL LANDSCAPE PLANTINGS AREAS AND UNDER TREES ISOLATED FROM PLANTING AREAS UNLESS IDENTIFIED OTHERWISE.
- KEEP MULCH APPX. 3" OFF PLANT TRUNK OR STEM.

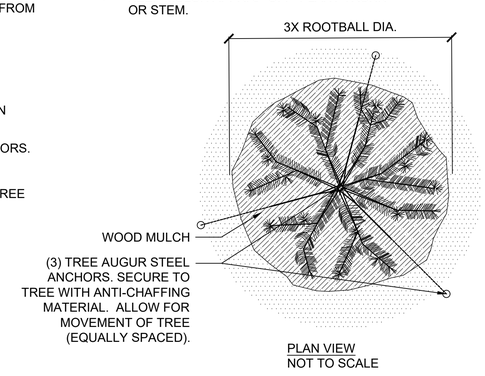

2 CONIFEROUS TREE PLANTING DETAIL
SCALE:N.T.S.

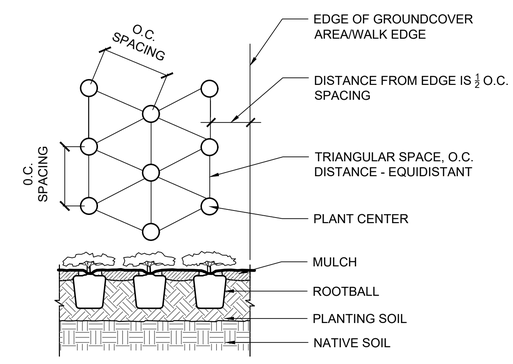

NOTE:
- KEEP MULCH APPX. 2" OFF PLANT TRUNK OR STEM

5 SHRUB & PERENNIAL PLANTING BED DETAIL
SCALE:N.T.S.

HTG architects
www.htg-architects.com
Minneapolis
Bismarck
1010 Mainstreet, Suite 100
Hopkins, MN. 55343
Tel: 952.278.8880

PROJECT

MAYO EMPLOYEES CREDIT UNION

ADDITION/REMODELING

LA CROSSE, WI

ISSUED SET MARCH 27, 2026
REVISIONS
DATE NO.

I HEREBY CERTIFY THAT THIS PLAN, SPECIFICATION OR REPORT WAS PREPARED BY ME OR UNDER MY DIRECT SUPERVISION, AND THAT I AM A DULY LICENSED ENGINEER UNDER THE LAWS OF THE STATE OF WISCONSIN.

NOT FOR CONSTRUCTION
ERIC SAUTBINE, P.E.
E-43034-6 03/27/2026
REG. NO. DATE

ANDERSON
13605 1st Avenue N. #100
Plymouth, MN 55441 | ae-mn.com
P 763.412.4000 | F 763.412.4090
Anderson Engineering of Minnesota, LLC

RESTORATION DETAILS

DRAWN BY: JS CHECKED BY: CC

L2

231139 - AE PROJ # 18994

COPYRIGHT © BY HTG ARCHITECTS

GENERAL LANDSCAPE NOTES:

1. LANDSCAPE CONTRACTOR SHALL VISIT THE PROJECT SITE PRIOR TO SUBMITTING A BID TO BECOME COMPLETELY FAMILIAR WITH SITE CONDITIONS.

2. ALL ROUGH AND FINISH GRADING TO BE DONE BY OTHERS.

3. NO PLANTING SHALL BE INSTALLED UNTIL ALL GRADING, BUILDING, CONSTRUCTION, UTILITY WORK & IRRIGATION (IF APPLICABLE) HAS BEEN COMPLETED IN THE AREAS TO BE PLANTED.

4. IT IS THE RESPONSIBILITY OF THE CONTRACTOR TO IDENTIFY ALL UNDERGROUND CABLES, CONDUITS, WIRES, ETC., ON THE PROPERTY.

5. IF THERE IS A DISCREPANCY BETWEEN THE NUMBER OF PLANTS SHOWN ON THE PLAN AND THE NUMBER OF PLANTS SHOWN IN THE PLANT LIST, THE NUMBER OF PLANTS SHOWN ON THE PLAN WILL TAKE PRECEDENCE.

6. ALL PROPOSED PLANT MATERIAL SHALL BE LOCATED CAREFULLY AS SHOWN ON THE PLAN. IF THE CONTRACTOR BELIEVES AN ERROR HAS BEEN MADE REGARDING SPACING OR LOCATION OF THE PLANT MATERIAL INDICATED ON THE PLAN, NOTIFY THE LANDSCAPE ARCHITECT PRIOR TO INSTALLATION.

7. THE CONTRACTOR IS RESPONSIBLE FOR COMPLETE MAINTENANCE OF THE PLANT MATERIAL (WATERING, SPRAYING, FERTILIZING, MOWING, ETC.) UNTIL THE WORK HAS BEEN ACCEPTED, BY THE OWNER.

8. THE CONTRACTOR IS RESPONSIBLE FOR ALL REPAIRS TO PROPERTY DAMAGE FROM PLANTING OPERATIONS AT NO COST TO THE OWNER.

9. ALL NEWLY PLANTED PLANT MATERIAL SHALL BE GUARANTEED THROUGH ONE CALENDAR YEAR STARTING FROM THE DATE OF ACCEPTANCE ESTABLISHED BY THE OWNER.

10. THE CONTRACTOR SHALL MEET WITH THE OWNER OR OWNERS REPRESENTATIVE ON SITE WHEN THEY FEEL THE PROJECT IS COMPLETE ACCORDING TO THE CONTRACT DOCUMENTS. IF ALL WORK IS SATISFACTORY AND COMPLETE ACCORDING TO THE CONDITIONS OF THE CONTRACT DOCUMENTS, THEN THE OWNER MUST DECLARE THE PROJECT COMPLETE. THIS DECLARATION WILL CONSTITUTE AS THE BEGINNING OF THE ONE (1) YEAR WARRANTEE PERIOD FOR ALL PLANT MATERIAL. THE OWNER SHALL PROVIDE A LETTER WITH SIGNATURE STATING THE DATE OF ACCEPTANCE.

11. WIND BURN OR OTHERWISE DAMAGED PLANT MATERIAL WILL NOT BE ACCEPTED.

12. CONTRACTOR CAN SUBSTITUTE MACHINE MOVED MATERIAL USING APPROPRIATE SIZE TREE SPADE FOR B & B WITH OWNER APPROVAL.

13. THE PRACTICE OF STAKING SHOULD NOT ALLOW NAILS, SCREWS, WIRES, ETC. TO PENETRATE THE OUTER SURFACE OF THE TREES.

14. THE CONTRACTOR WILL BE RESPONSIBLE FOR THE REMOVAL OF ALL TREE STAKES, GUYS, STRAPS AND TRUNK PROTECTION MEASURES FOLLOWING THE COMPLETION OF THE WARRANTEE PERIOD OR AS DIRECTED BY THE OWNER.

15. LANDSCAPE CONTRACTOR IS REQUIRED TO PROVIDE THE OWNER WITH MAINTENANCE INFORMATION DURING THE GUARANTEE PERIOD RELATING TO WATERING, FERTILIZING, PRUNING, PEST CONTROL, AND RELATED ITEMS. THIS WILL BE PREPARED AND DELIVERED TO THE OWNER AFTER PROVISIONAL INSPECTION APPROVAL HAS BEEN GIVEN BY THE OWNER AND/OR LANDSCAPE ARCHITECT.

16. INSTALL CORRUGATED PLASTIC TREE GUARDS, WHITE IN COLOR, WITH THE SIZE OF TUBE 1" DIA. (MIN.) LARGER THAN THE CALIPER OF THE TREE TO BE PROTECTED.

17. CONTRACTOR TO FURNISH & INSTALL METAL EDGING AS SHOWN ON THE PLANS & DETAILS. METAL EDGING SHALL BE ALUMINUM OR STEEL, BLACK IN COLOR, WITH A MINIMUM THICKNESS OF 1/8" AND 4" DEEP. INSTALL 1 METAL STAKE EVERY 3-1/2 FEET OF EDGING.

18. LANDSCAPE FABRIC (FILTER MAT) TO HAVE A COMBINED WEIGHT OF 4.5-5.5 OZ. PER S.Y. FABRIC SHOULD BE U.V. STABILIZED AND HAVE A FIVE YEAR MINIMUM WEATHERABILITY FACTOR IN FULL SUNLIGHT. FABRIC TO BE PHILLIPS DUON R OR EQUIVALENT. SAMPLE REQUIRED FOR APPROVAL.

19. 3" DEPTH SHREDDED HARDWOOD MULCH SHALL BE INSTALLED UNDER ALL TREES AND SHRUBS THAT ARE ISOLATED FROM GROUNDCOVER AREAS AND GENERAL SHRUB MASSES.

20. 3" DEPTH 1" TO 1-1/2" WASHED RIVER ROCK SHALL BE INSTALLED OVER LANDSCAPED FABRIC AS INDICATED ON THE PLANS & DETAILS.

21. CALIPER OF TREES UP TO AND INCLUDING 4" SHALL BE MEASURED AT 6" ABOVE GROUND LEVEL.

22. FOR BALLED & BURLAP PLANT MATERIAL, REMOVE THE TOP HALF OF THE BURLAP FROM THE ROOT BALL. WIRE CAGES, STRAPS, ETC. SHALL BE REMOVED FROM THE TOP HALF OF THE ROOTBALL BEFORE INSTALLATION.

23. ALL CONTAINER MATERIAL SHALL HAVE BEEN GROWN IN CONTAINER FOR A MINIMUM OF 6 MONTHS PRIOR TO INSTALLATION.

24. SHRUBS SHALL BE PLANTED A MINIMUM OF ONE HALF THEIR ON-CENTER SPACING FROM PAVING EDGE UNLESS OTHERWISE NOTED.

25. DECIDUOUS SHRUBS SHALL HAVE MINIMUM OF FIVE (5) CANES AT SPECIFIED HEIGHT UNLESS OTHERWISE NOTED IN PLANT SCHEDULE.

26. ALL PERENNIAL BEDS TO RECEIVE ROCK MULCH SHALL HAVE LANDSCAPE FABRIC INSTALLED WITH HOLES FOR PLANTS CUT 2.5 TIMES THE DIAMETER OF THE CONTAINER.

27. LANDSCAPE CONTRACTOR SHALL PROVIDE AND INSTALL NURSERY GROWN PLANT MATERIAL CONFORMING TO THE REQUIREMENTS AND RECOMMENDATIONS OF THE LATEST EDITION OF ANSI Z60.1 STANDARDS UNLESS OTHERWISE NOTED IN THE PLANS OR SPECIFICATIONS.

GENERAL PLANT ESTABLISHMENT PERIOD NOTES:

1. THE REQUIRED WORK SHALL CONSIST OF CONTINUOUSLY CONDUCTING OPERATIONS AND MAINTENANCE FOR A WARRANTY PERIOD ESTABLISHED FOR 1 YEAR AFTER THE INSTALLATION HAS BEEN ACCEPTANCE BY THE OWNER. THE WORK INCLUDES:

   1.1. ESTABLISHMENT OF BALLED AND BURLAPPED AND CONTAINER PLANT MATERIAL, SODDED AND SEEDED AREAS
   1.2. INCLUDING PEST CONTROL, FERTILIZING AND FUNGICIDAL TREATMENTS
   1.3. REGULAR WATERING SCHEDULINGS FOR ALL PLANT MATERIAL, SOD AND SEEDING
   1.4. IRRIGATION SYSTEM OPERATION AND MAINTENANCE
   1.5. REMOVAL OF ALL WEEDS WITHIN THE PROJECT AREA BY METHODS AGREED BY THE OWNER (POST/PRE HERBICIDE TREATMENT, HAND OR MECHANICAL REMOVAL)
   1.6. MAINTENANCE OF MISCELLANEOUS ITEMS (EROSION CONTROL PRODUCTS, REPAIRS FROM EROSION)

2. THE CONTRACTOR SHALL BE RESPONSIBLE FOR ON-SITE REVIEW MEETINGS WITH THE OWNER DURING THE PLANT ESTABLISHMENT PERIOD TO IDENTIFY OPERATIONS AND MAINTENANCE TO BE EXECUTED MONTHLY.

3. PLANT MATERIAL DEEMED TO BE REPLACED AT THE END OF PLANT ESTABLISHMENT PERIOD SHALL BE EXECUTED WITHIN 2 WEEKS (14 DAYS) PRESENTING LESS THE FOLLOWING SURVIVORSHIP:

   3.1. BALLED AND BURLAPPED AND CONTAINER PLANT MATERIAL: 75%
   3.2. SODDED AREAS: 100% (0% BARE SOIL)
   3.3. SEEDED AREAS: 90% (<10% BARE SOIL)

4. REPLACEMENT PLANTS, SOD AND SEED SHALL BE OF THE SAME SPECIES AND SIZE AS ORIGINALLY SPECIFIED ON THE DRAWINGS, UNLESS THE OWNER DETERMINES THAT SUBSTITUTIONS OF ANOTHER SPECIES OR SIZE SHALL BE MADE.

GENERAL SODDING, SEEDING & TOPSOIL NOTES:

1. LANDSCAPE CONTRACTOR SHALL ENSURE THAT NEW TREES MOVED ONTO THE SITE ARE DUG FROM SIMILAR SITES WITH SIMILAR SOILS TO THE SOILS OF THIS PROJECT (HEAVY TO HEAVY, LIGHT TO LIGHT. HEAVY TO LIGHT SOILS). CONTRACTOR SHALL REVIEW SOIL CONDITIONS/TYPES WITH OWNER/LANDSCAPE ARCHITECT PRIOR TO INSTALLATION.

2. ALL NEWLY INSTALLED PLANT MATERIAL SHALL BE PLANTED IN WELL-DRAINED AREAS. NOTIFY THE LANDSCAPE ARCHITECT PRIOR TO INSTALLATION IF ANY PLANT MATERIAL IS LOCATED IN DRAINAGE SWALES OR WET & POORLY DRAINED AREAS.

3. ALL PLANTINGS SHALL RECEIVE FERTILIZER AS FOLLOWS:

   3.1. SUMMER AND FALL PLANTING: 0-20-20 GRANULAR (IN SAUCER AROUND PLANT AT THE RATE OF 12 OZ. PER 2-3" CAL. TREE & 6 OZ. PER SHRUB).
   3.2. SPRING PLANTING: 10-10-10 GRANULAR (APPLY ABOVE REFERENCED FERTILIZER AT A RATE OF 12 OZ. PER 1-1/2" CAL. TREE OR LARGER & 6 OZ. PER SHRUB & PERENNIAL.

4. ALL PLANTINGS SHALL RECEIVE AN AMENDED SOIL MIX CONSISTING OF THREE (3) PARTS:

   4.1. 45% APPROVED TOPSOIL (ONE SITE PREFERRED)
   4.2. 45% ORGANIC MATTER (TYPE 1 SPHAGNUM PEAT MOSS FINELY DIVIDED WITH A PH OF 3.1 - 5.0.)
   4.3. 10% SAND (FINE CLEAN MASONRY SAND)

5. AREAS CONFINED TO A MASS PLANTING AREA (PLANTING BED) SHALL RECEIVE THE AMENDED SOIL MIX AT MIN. 12" DEPTH THROUGHOUT THE PLANTING AREA. AMENDED SOIL MIX SHALL BE MIXED THOROUGHLY AND INSTALLED IN 6" LIFTS.

6. AREAS TO RECEIVE SOD OR SEED SHALL HAVE A 6" MINIMUM DEPTH OF TOPSOIL. TOPSOIL SHALL PROVIDE FERTILE, FRIABLE, NATURAL LOAM, SURFACE SOIL, REASONABLY FREE OF SUBSOIL, CLAY CLUMPS, BRUSH WEEDS AND OTHER LITTER, AND FREE OF ROOTS, STUMPS, STONE LARGER THAN 1" IN ANY DIMENSION, AND OTHER EXTRANEOUS OR TOXIC MATTER HARMFUL TO PLANT GROWTH.

7. SOD SHALL BE 30" X 100' ROLLS WHERE APPLICABLE, TO BE LAID PARALLEL WITH THE CONTOURS AND HAVE STAGGERED JOINTS. ON SLOPES STEEPER THAN 3:1 OR DRAINAGE SWALES, THE SOD SHALL BE STAKED INTO THE GROUND. SCARIFY THE EXISTING GRADES WITH FIELD CULTIVATOR PRIOR TO PLACING OF TOPSOIL AND FINISH GRADING FOR SOD. IMMEDIATELY PRIOR TO PLACING SOD, CONTRACTOR SHALL APPLY 10-6-4 FERTILIZER AT THE RATE OF 10 POUNDS PER 1000 SQ. FT.

8. ALL AREAS SPECIFIED AS 'WET DETENTION SEED MIX' TO BE SEEDED WITH WIDOT MIX 95B. BROAD CAST, DRILL AND/OR HYDROSEED AT A RATE OF 5.43 LBS./AC. WITH 2 TONS SHREDDED AND PUNCHED IN PLACE STRAW PER ACRE. SEED MIX SHALL BE ABLE TO WITHSTAND PERIODIC FLOODING.

GENERAL IRRIGATION NOTES:

1. PRIOR TO CONSTRUCTION, VERIFY WITH THE GENERAL CONTRACTOR AND ALL LOCAL UTILITY COMPANIES TO LOCATE EXACT LOCATIONS OF UNDERGROUND UTILITIES.

2. THE IRRIGATION SHALL BE A DESIGN/BUILD SYSTEM BY THE CONTRACTOR. THE LANDSCAPE CONTRACTOR SHALL BE RESPONSIBLE FOR PROVIDING AN IRRIGATION LAYOUT PLAN AND SPECIFICATIONS AS PART OF THE SCOPE OF WORK WHEN BIDDING. THESE SHALL BE APPROVED BY THE OWNER PRIOR TO ORDER AND/OR INSTALLATION.

3. VALVE AND CIRCUITS SHALL BE SEPARATED BASED ON WATER USE, SO THAT TURF AREAS ARE WATERED SEPARATELY FROM SHRUB AND GROUND COVER AREAS. IRRIGATION HEADS IN TURF AREAS SHALL BE VALVED SPEARATELY FROM SHRUB AND GROUND COVER AREAS. IT IS RECOMMENDED THAT FULL SUN AND SHADY AREAS TO BE VALVED SEPARATELY AS WELL AS HIGH RUN-OFF AND LOW RUN-OFF AREAS TO BE VALVED SEPARATELY.

4. CONFIRM LIMITS OF IRRIGATION, EXISTING AND FUTURE HARDSCAPE AND BUILDING LOCATIONS PRIOR TO THE DESIGN OF THE IRRIGATION SYSTEM.

5. CONTRACTOR SHALL VERIFY WATER SOURCE LOCATION AND PRESSURE AND SUPPLY A SYSTEM THAT PROVIDES FULL AND COMPLETE COVERAGE TO ALL AREAS TO BE IRRIGATED.

6. SYSTEM SHOULD BE DESIGNED TO OPERATE AT UP TO 300 GPM @ 90 PSI TO COMPLETE WATER SCHEDULES WITHIN 12-HOURS MAXIMUM.

7. RAIN SENSORS AND OTHER WATER SAVING TECHNOLOGIES SHALL BE INCLUDED WITHIN THE IRRIGATION DESIGN.

8. PROVIDE THE OWNER WITH AN OPERATING SCHEDULE THAT WORKS WITH THE APPROVED LAYOUT PLAN AND IDENTIFY ANY FIELD ADJUSTMENTS PRIOR TO PROJECT COMPLETION.

9. AVOID OVER-SPRAY ONTO ROADS, SIDEWALKS, SIGNS AND PARKING AREAS. SPRINKLER ARCS SHALL BE DETERMINED ON SITE BY THE IRRIGATION INSTALLER TO PROVIDE THE MAXIMUM COVERAGE POSSIBLE. CAREFULLY ADJUST THE ARCS AND RADIUS OF EACH SPRINKLER TO PROVIDE HEAD-TO-HEAD COVERAGE.

10. LOCATE VALVE BOXES AWAY FROM ROAD/CURB SO THEY ARE LESS VISUAL WHERE APPLICABLE.

11. DO NOT TRENCH THROUGH THE ROOT BALLS OF NEW PLANTINGS.

12. MAINLINE PIPING BENEATH TRAFFIC AREAS SHALL BE INSTALLED WITH A MINIMUM EARTH COVER OF 30-INCHES FROM BOTTOM OF ROAD SUB-GRADE AND CONTAIN SLEEVES NOT LESS THAN TWO NOMINAL DIMENSIONS GREATER THAT THE PIPE PASSING THROUGH.

13. IRRIGATION INSTALLER SHALL FURNISH AND INSTALL SLEEVE MATERIAL UNDER ALL ROADWAYS, WALKS AND DRIVEWAYS WHERE NECESSARY.

14. TOP OF MAINLINES SHALL BE AT LEAST 30-INCHES BELOW GRADE IN TURF AREAS.

15. TOP OF LATERAL LINES SHALL BE AT LEAST 18-INCHES BELOW GRADE.

16. MAINLINE PRESSURE PIPE FITTINGS 3-INCHES AND LARGER SHALL BE PUSH ON GASKET JOINED AND SHALL HAVE MECHANICAL JOINT RESTRAINTS. MAINLINE PRESSURE PIPE FITTINGS 2.5-INCHES AND SMALLER SHALL BE GLUED AND SHALL HAVE CONCRETE THRUST BLOCKS AT FITTINGS THAT COMPRISE CHANGE IN DIRECTION.

17. OTHERS SHALL FURNISH, INSTALL AND BRING 24-INCHES ABOVE GRADE A MUNICIPAL POTABLE STUB FOR IRRIGATION, COORDINATE WITH GENERAL CONTRACTOR.

18. INSTALLER IS RESPONSIBLE FOR FURNISHING AND INSTALLING THE BACKFLOW PREVENTOR, WATER METER AND BOOSTER PUMP, IF APPLICABLE.

19. IRRIGATION CONTROL WIRE SHALL BE DIGITAL TWO-WIRE, UL LISTED FOR DIRECT BURIAL.

20. CONNECT ALL ELECTRICAL WIRING IN ACCORDANCE WITH THE NATIONAL ELECTRICAL CODE AND ALL APPLICABLE LOCAL ELECTRIC UTILITY CODES INCLUDING:

   20.1. ALL LOW VOLTAGE IRRIGATION CONTROL WIRE SHALL BE INSTALLED WITH THE MAINLINE PIPE WHERE POSSIBLE
   20.2. DO NOT LOOP THE LOW VOLTAGE IRRIGATION CONTROL WIRE PATH.
   20.3. SNAKE WIRE AT BOTTOM OF TRENCH BENEATH MAINLINE.
   20.4. PROVIDE 18-INCH OF SLACK CONTROL WIRE AT ALL CHANGES IN DIRECTION.
   20.5. PROVIDE 24-INCH OF SLACK CONTROL WIRE AT EACH REMOTE CONTROL VALVE COILED INSIDE VALVE BOX.
   20.6. ALL WIRE SPLICES SHALL BE WATERTIGHT CONNECTORS AND CONTAINED IN VALVE BOX.
   20.7. ALL WIRING BENEATH HARDSCAPES SHALL BE CONTAINED IN SLEEVING, SEPARATE FROM PIPING. ELECTRICAL SLEEVES ARE TO BE SIZED APPROPRIATELY FOR EASE OF WIRE INSTALLATION AND REPAIR.
   20.8. ALL WIRING SHALL BE IDENTIFIED AT EACH END TO PROVIDE INDICATION AS TO WHICH LOCATION THE WIRE IS CONNECTED.
   20.9. GROUNDING PER MANUFACTURER'S RECOMMENDATION OR LOCAL ELECTRICAL CODE.

21. SCHEDULE AND PROGRAM CONTROLLER AND VALVES FOR APPROPRIATE LANDSCAPE WATER REQUIREMENTS.

HTG architects

www.htg-architects.com
Minneapolis
Bismarck

1010 Mainstreet, Suite 100
Hopkins, MN. 55343
Tel: 952.278.8880

PROJECT

MAYO EMPLOYEES CREDIT UNION

ADDITION/REMODELING

LA CROSSE, WI

ISSUED SET MARCH 27, 2026
REVISIONS
DATE NO.

I HEREBY CERTIFY THAT THIS PLAN, SPECIFICATION OR REPORT WAS PREPARED BY ME OR UNDER MY DIRECT SUPERVISION, AND THAT I AM A DULY LICENSED ENGINEER UNDER THE LAWS OF THE STATE OF WISCONSIN.

NOT FOR CONSTRUCTION

ERIC SAUTBINE, P.E.

E-43034-6 03/27/2026
REG. NO. DATE

ANDERSON
13605 1st Avenue N. #100
Plymouth, MN 55441 | ae-mn.com
P 763.412.4000 | F 763.412.4090
Anderson Engineering of Minnesota, LLC

RESTORATION NOTES

DRAWN BY: JS CHECKED BY: CC

L3

231139 - AE PROJ # 18994

COPYRIGHT © BY HTG ARCHITECTS

00 KEYED SITE PLAN NOTES

NO.	DESCRIPTION
1	ACCESSIBLE PARKING SPACE SIGN SHALL BE LOCATED CENTERED AT HEAD OF AISLE. MOUNTED ON 2" SQ. ALUMINUM PIPE STD. AND 40"-60" ABOVE ADJACENT PARKING SURFACE. MAX 8'-0" FROM CURB. SEE DETAIL
2	PROVIDE UNDERGROUND PIPES FOR LAWN SPRINKLER - VERIFY WITH SPRINKLER CONTRACTOR FOR QUANTITY AND LOCATIONS.
3	6" DIA. PIPE BOLLARD. SEE SHEET A1.2 FOR DETAIL
4	FLAGPOLE. SEE SHEET A1.2 FOR BASE DETAIL
5	REINFORCED CONCRETE AT DRIVE-UP. SEE CIVIL
6	'DO NOT ENTER SIGNAGE', COORDINATE WITH SIGNAGE VENDOR
7	ROCK MULCH. SEE CIVIL / LANDSCAPE
8	PROVIDE ' NO PARKING' STRIPING, AS REQUIRED BY STATE CODE
9	ACCESSIBLE PEDESTRIAN RAMP. SEE CIVIL
10	4" CONCRETE SIDEWALK. SEE CIVIL
11	GAS METER. SEE MECHANICAL
12	MANHOLE COVER. SEE CIVIL
13	SURFACE MOUNTED BIKE RACK, FINALIZE EXACT LOCATION WITH OWNER
14	CT CABINET. SEE ELECTRICAL
15	NEW TRANSFORMER. SEE ELECTRICAL

SITE PLAN GENERAL NOTES:

1. ALL SITE GRADING TO BE DONE PER CIVIL DRAWINGS.
2. VERIFY & LOCATE ALL UNDERGROUND PHONE & UTILITY LINES PRIOR TO ANY EXCAVATION.
3. SEE CIVIL & MECH./ELEC. DRAWINGS FOR ADDITIONAL INFORMATION REGARDING SITE UTILITIES.
4. BARRICADE OFF CONSTRUCTION AREA AS REQUIRED KEEP CONSTRUCTION AREA TO MINIMUM.
5. SLOPE SIDEWALKS & GRADE AWAY FROM BUILDING TYPICAL 1:20 MAX. SLOPE. SIDEWALK RAMP SLOPE IS 1:12 MAX. ACCESSIBLE PKG. & ACCESS AISLES ARE 1:48 MAX. SLOPE IN ANY DIRECTION.
6. MATCH NEW CONSTRUCTION WITH EXISTING WHEREVER NECESSARY (ie., CONC., CURBS, CONC. WALKS, PAVING, ETC.).
7. MATCH/TIE NEW GRADING INTO EXISTING GRADING.
8. CUT & PATCH EXISTING BITUMINOUS PAVING, CONC. CURBS & SIDEWALKS TO MATCH EXISTING.
9. ALL MECHANICAL & ELECTRICAL EXPOSED PIPING, GRILLES, CONDUITS, ETC. TO BE PAINTED.
10. PARKING STRIPES TO BE PAINTED 4" WIDE AT 9'-0" O.C. & 20'-0".
11. FURNISH & INSTALL POSTED HANDICAP SIGNS AS REQUIRED BY STATE CODE.
12. CONC. SIDEWALK WIDTHS TO BE 5'-0" WIDE w/CONTROL JOINTS @ 5'-0" SIM.
13. SEE CIVIL DRAWINGS AND EXHIBITS FOR ADDTIONAL/ SPECIFIC INFORMATION ON SITE PLAN

SITE PLAN SUMMARY:

ZONING:
MUNICIPAL ZONING APPLIES (NO CONDITIONS APPLY)

PARCEL AREA (17-30158-50):
0.84 ACRES +/-

MAIN LEVEL SQ. FT.	2,770 S.F.
DRIVE-UP CANOPY	555 S.F.

PARKING REQUIREMENTS:
MINIMUM PARKING STALL DIMENSIONS 20' X 9' (90 DEGREE PARKING)

EXISTING PARKING STALLS:	18
NEW PARKING STALLS:	17
ACCESSIBLE STALLS PROVIDED:	1

PROPOSED IMPERVIOUS	0.498 ACRES (21,686 S.F.)
PROPOSED GREEN SPACE	0.322 ACRES (14,036 S.F.)

SETBACKS:
MINIMUM SETBACK FOR PARKING STALLS AND DRIVES IS 5' FROM PROPERTY LINES.

SURVEY DATA WAS TAKEN FROM 4669469-253400.01 CERT. DATE 11/2025 BY PAUL WILLIS REG. # 37732. HTG ARCHITECTS IS NOT RESPONSIBLE FOR ACCURACY OR OMMISIONS, IF ANY. CONTRACTOR SHALL VERIFY ALL EXISTING CONDITIONS.

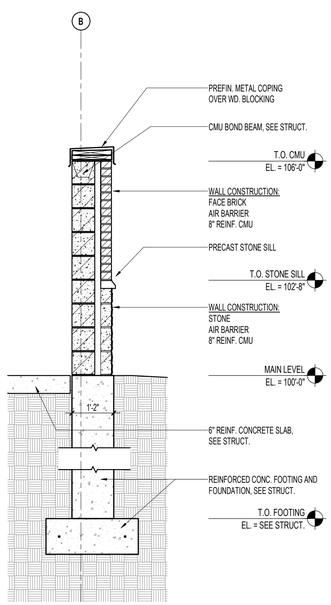

3 A1.1 WALL SECTION, TRASH ENCLOSURE
1/2" = 1'-0"

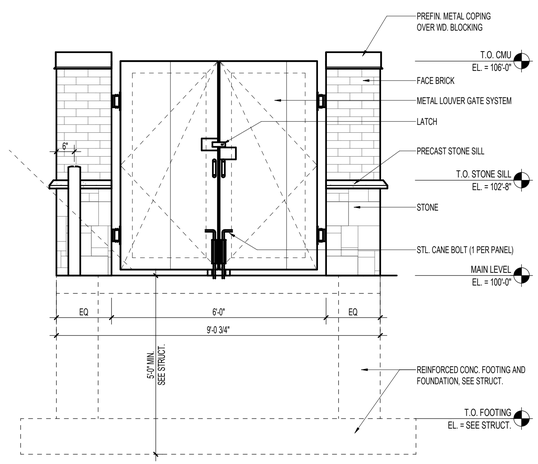

2 A1.1 ENLARGED TRASH ENCLOSURE ELEVATION
1/2" = 1'-0"

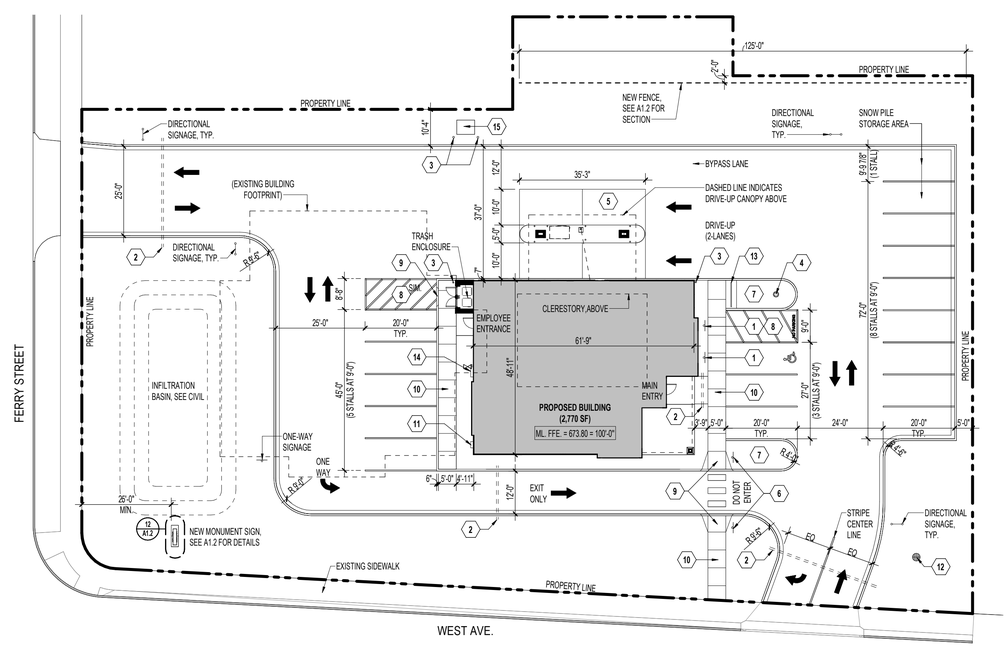

1 A1.1 SITE PLAN
1" = 20'-0"

TRUE NORTH PLAN NORTH

Autodesk Docs://Mayo Employees FCU-La Crosse-HVF251167_Arch_Central_R25.rvt
3/27/2026 2:50:57 PM

HTG architects

www.htg-architects.com
Minneapolis Bismarck

1010 Mainstreet, Suite 100
Hopkins, MN 55343
Tel: 952.278.8880

PROJECT

MAYO EMPLOYEES FEDERAL CREDIT UNION

NEW BUILDING

605 WEST AVE S.
LA CROSSE, WI

BID SET	03/27/2026

REVISIONS

DATE	NO	

WISCONSIN SEAN RABOIN 12055 HOPKINS, MN ARCHITECT

SEAN C. RABOIN
12055 03/27/2026
Reg No. Date

SITE PLAN

Drawn By: SRC Checked By: SCR

A1.1

251167

COPYRIGHT © HTG ARCHITECTS

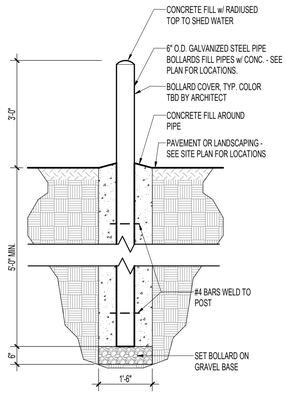

1 A1.2 **PIPE BOLLARD SECTION**
1/2" = 1'-0"

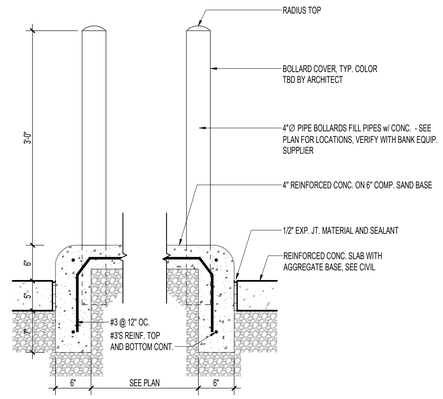

2 A1.2 **DRIVE UP ISLAND DETAIL**
1" = 1'-0"

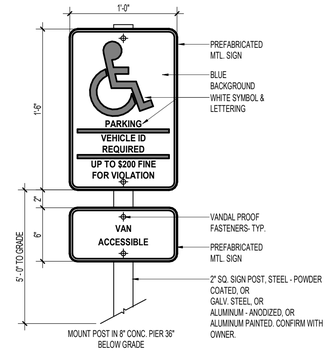

3 A1.2 **ACCESSIBLE PARKING SIGN DETAIL**
1 1/2" = 1'-0"

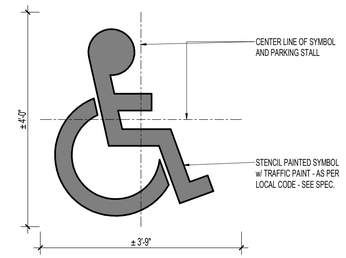

4 A1.2 **ACCESSIBLE PARKING SYMBOL**
3/4" = 1'-0"

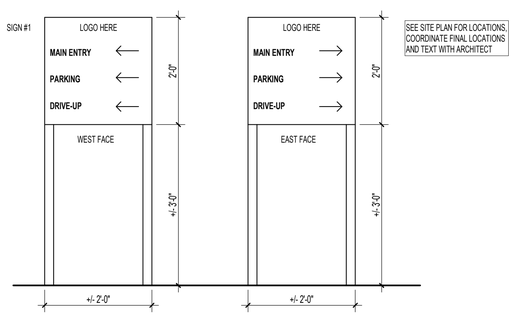

5 A1.2 **DIRECTIONAL SIGNAGE ELEVATIONS**
3/4" = 1'-0"

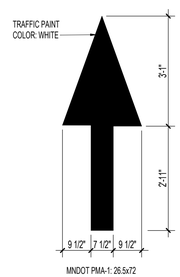

6 A1.2 **DIRECTIONAL ARROW**
1/2" = 1'-0"

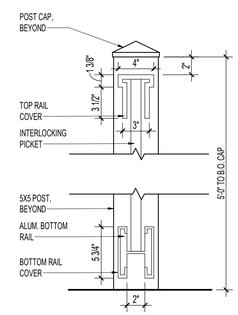

7 A1.2 **SECTION AT FENCE**
1 1/2" = 1'-0"

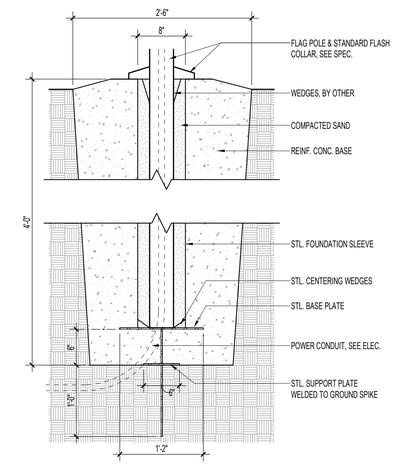

8 A1.2 **FLAG POLE BASE DETAIL**
1" = 1'-0"

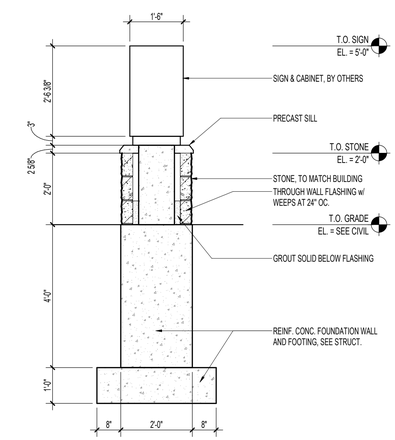

9 A1.2 **MONUMENT SIGN SECTION**
1/2" = 1'-0"

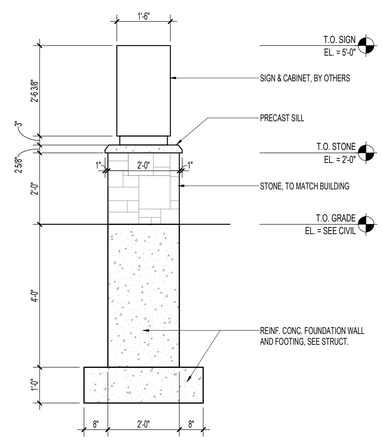

10 A1.2 **MONUMENT SIGN ELEVATION (SIDE)**
1/2" = 1'-0"

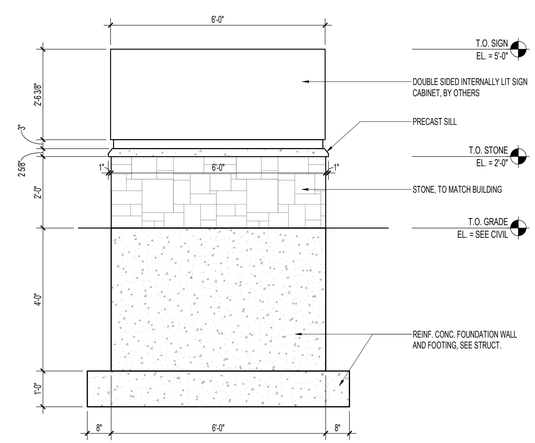

11 A1.2 **MONUMENT SIGN ELEVATION (FRONT)**
1/2" = 1'-0"

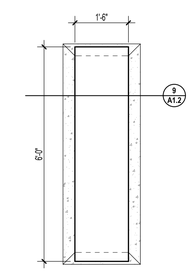

NOTE:
ALL FINAL DIMS. AND EXACT LOCATION TO BE COORDINATED WITH SIGNAGE VENDOR AND OWNER, PRIOR TO INSTALL.

12 A1.2 **MONUMENT SIGN PLAN**
1/2" = 1'-0"

HTG architects

www.htg-architects.com
Minneapolis Bismarck

1010 Mainstreet, Suite 100
Hopkins, MN 55343
Tel: 952.278.8880

PROJECT

MAYO EMPLOYEES FEDERAL CREDIT UNION

NEW BUILDING

605 WEST AVE S.
LA CROSSE, WI

BID SET	03/27/2026

REVISIONS

DATE	NO	

WISCONSIN SEAN RABOIN 12055 HOPKINS MN ARCHITECT

SEAN C. RABOIN
12055 03/27/2026
Reg No. Date

SITE DETAILS

Drawn By: SRC Checked By: SCR

A1.2

251167

COPYRIGHT © HTG ARCHITECTS

Autodesk Docs://Mayo Employees FCU-La Crosse-WI/251167_Arch_Central_R25.rvt
3/27/2026 2:46:14 PM

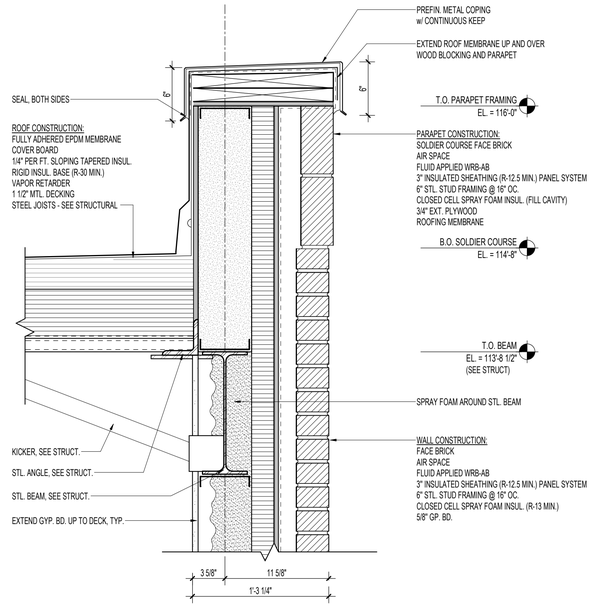

2 / A1.3 PARAPET DETAIL @ BRICK
1 1/2" = 1'-0"

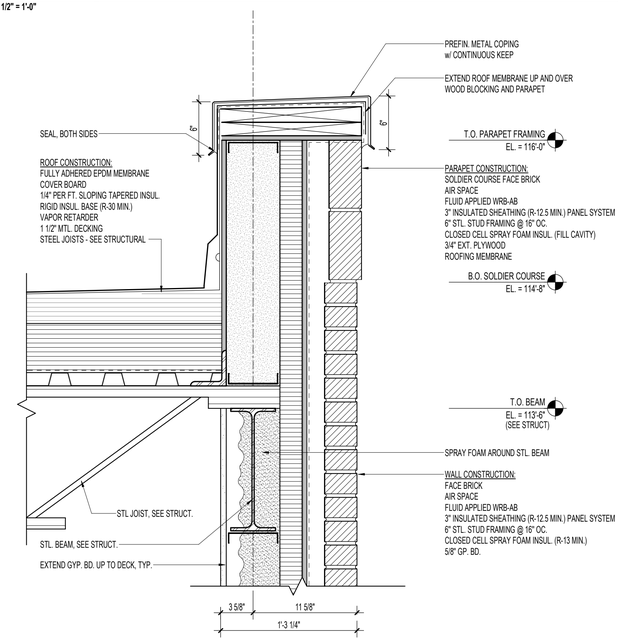

3 / A1.3 PARAPET DETAIL @ BRICK, TYP.
1 1/2" = 1'-0"

GENERAL NOTES:

1. LOCATIONS OF ALL ROOF PENETRATIONS TO BE VERIFIED WITH APPROPRIATE SUBCONTRACTOR.
2. VERIFY EXACT LOCATIONS OF ROOFTOP CURBS WITH STRUCTURAL ENGINEER PRIOR TO COMMENCING WORK.
3. INSTALL RIGID INSULATION CRICKETS AT HIGH SIDE OF ALL RTU'S AND ROOF HATCH. SLOPE 1/4" PER FOOT.
4. PROVIDE PIPE FLASHINGS, CONDUIT FLASHINGS, AND MANUFACTURED GAS PIPING SUPPORTS AS REQUIRED. REFER TO TYPICAL DETAILS ON A1.3 AND MANUFACTURES DETAILS TO MEET WARRANTY OF ROOF.
5. PROVIDE STRUCTURAL FRAMING AT ALL ROOF OPENINGS. REFER TO STRUCTURAL DRAWINGS.
6. CONTRACTOR SHALL KEEP ROOF CLEAN OF ALL DEBRIS DURING ALL CONSTRUCTION WORK.
7. REFER TO DESIGN/BUILD PLUMBING DRAWINGS, MECHANICAL AND ELECTRICAL DRAWINGS FOR ADDITIONAL ROOF PENETRATIONS REQUIRING ROOF FLASHING WORK. ALL ROOF PENETRATIONS FOR MINOR ROOF VENTS AND SIMILAR ITEMS MAY NOT BE INDICATED ON THIS ROOF PLAN: HOWEVER, ALL ROOF FLASHING WORK SHALL BE PROVIDED BY THE ROOFING SUBCONTRACTOR SO AS TO OBTAIN OR MAINTAIN NEW ROOFING WARRANTIES.

MAIN BUILDING ROOF -
FULLY ADHERED EPDM MEMBRANE
1/2" COVER BOARD
1/4" PER FT. SLOPING TAPERED INSUL.
5 1/2" RIGID INSUL. BASE (R-30 MIN.)
VAPOR RETARDER
1 1/2" MTL. DECKING
STEEL JOISTS - SEE STRUCTURAL

DRIVE-UP CANOPY ROOF-
FULLY ADHERED EPDM MEMBRANE
1/2" COVER BOARD
1/4" PER FT. SLOPING TAPERED INSUL.
5 1/2" RIGID INSUL. BASE (R-30 MIN.)
VAPOR RETARDER
1 1/2" MTL. DECKING
STEEL JOISTS - SEE STRUCTURAL

CLERESTORY ROOF -
FULLY ADHERED EPDM MEMBRANE
1/2" COVER BOARD
1/4" PER FT. SLOPING TAPERED INSUL.
5 1/2" RIGID INSUL. BASE (R-30 MIN.)
VAPOR RETARDER
1 1/2" MTL. DECKING
STEEL JOISTS - SEE STRUCTURAL

MISCELLAENEOUS NOTES -
FULLY ADHERE EPDM. TO ALL PARAPETS- TYPICAL.

EPDM. TO BE ADHERED & MECH. FASTENED TO DECK (SEE SPEC.)

SEE MECHANICAL FOR EXACT QUANTITIES & LOCATIONS OF ROOF & OVERFLOW DRAINS.

INSTALL CRICKETS AS REQ'D. FOR PROPER ROOF DRAINAGE.

5.5 — THICKNESS (IN INCHES) OF TAPERED INSULATION.

R.D. — ROOF DRAIN (SEE MECH.)

O.D. — OVERFLOW ROOF DRAIN (SEE MECH.) OVERFLOW DRAIN TO BE MAX. 2" ABOVE ROOF DRAIN.

00 KEYED ROOF PLAN NOTES

NO.	DESCRIPTION
A	ROOF DRAIN PER ROOF DETAILS, SEE MECHANICAL
B	OVERFLOW DRAIN PER ROOF DETAILS, SEE MECHANICAL
C	THRU-WALL SCUPPER PER ROOF DETAILS, SEE EXTERIOR ELEVATIONS
D	ROOF CRICKET, TYP.
E	RTU ON INSULATED EQUIPMENT CURB PER ROOF DETAILS - SEE MECHANICAL
F	24" x 24" WALKWAY PAVERS
G	PREFINISHED SHEET METAL PARAPET CAP, SEE DETAILS
H	PREFINISHED METAL PANEL PARAPET, SEE DETAILS
J	12" REDUCER STRIP, TYP.
K	PEAK OF TAPERED INSUL.

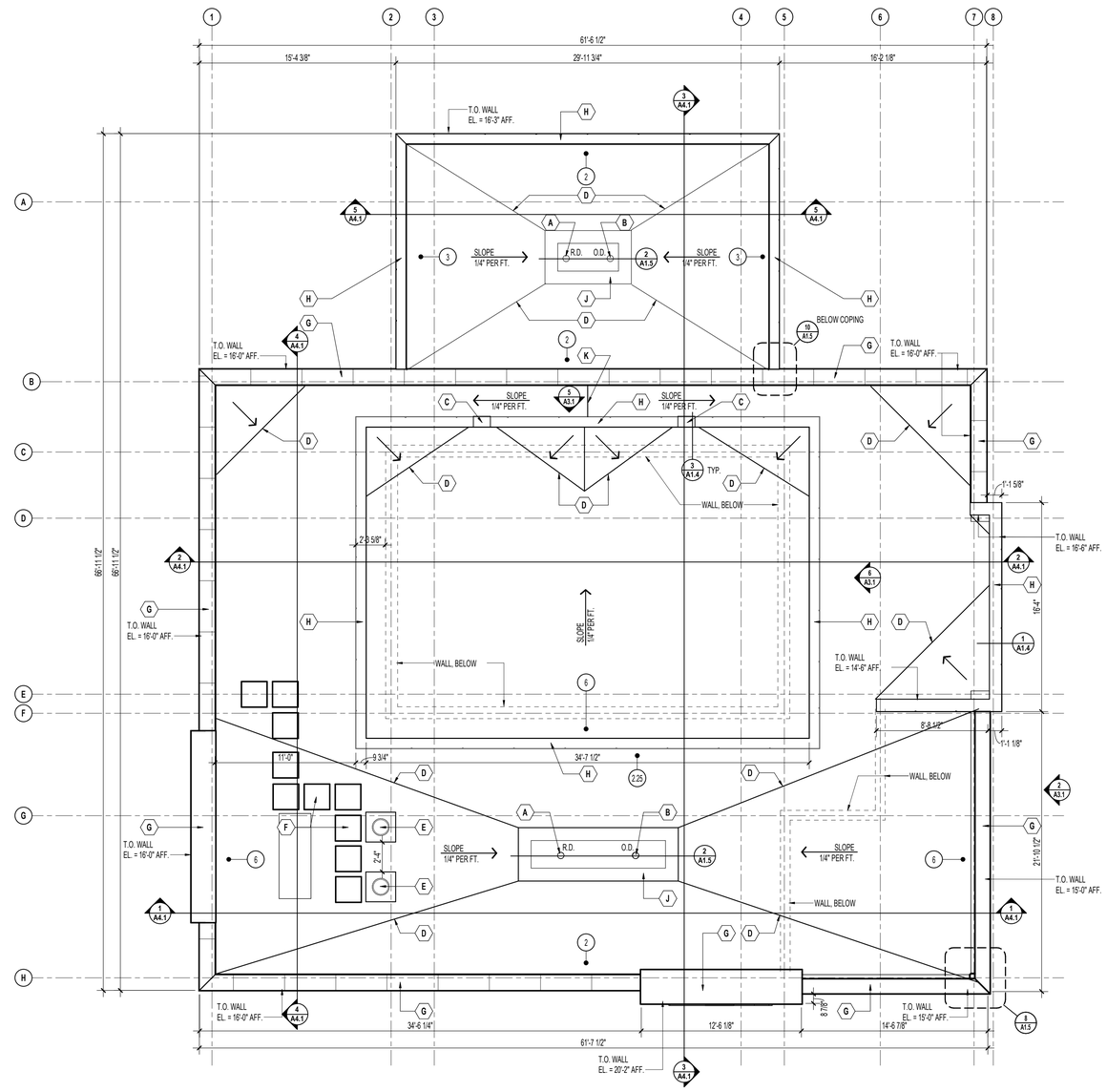

1 / A1.3 ROOF PLAN
3/16" = 1'-0"

TRUE NORTH PLAN NORTH

HTG architects
www.htg-architects.com
Minneapolis Bismarck
1010 Mainstreet, Suite 100
Hopkins, MN 55343
Tel: 952.278.8880

PROJECT

MAYO EMPLOYEES FEDERAL CREDIT UNION

NEW BUILDING

605 WEST AVE S.
LA CROSSE, WI

BID SET 03/27/2026
REVISIONS
DATE NO

WISCONSIN SEAN RABOIN 12055 HOPKINS, MN ARCHITECT

SEAN C. RABOIN
12055 03/27/2026
Reg No. Date

ROOF PLAN & ROOF DETAILS

Drawn By: SRC Checked By: RBB

A1.3

251167

COPYRIGHT © HTG ARCHITECTS

Autodesk Docs://Mayo Employees FCU-La Crosse-W025167_Arch_Central_R25.rvt
3/27/2026 2:52:35 PM

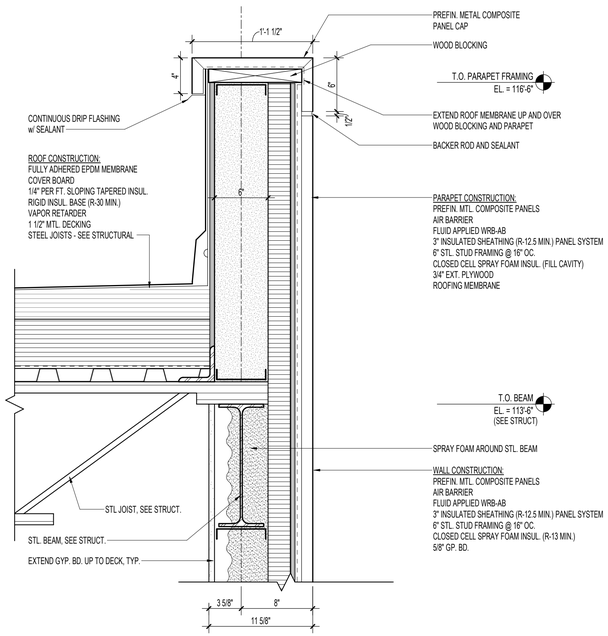

1 A1.4 **PARAPET DETAIL @ METAL PANEL CAP**
1 1/2" = 1'-0"

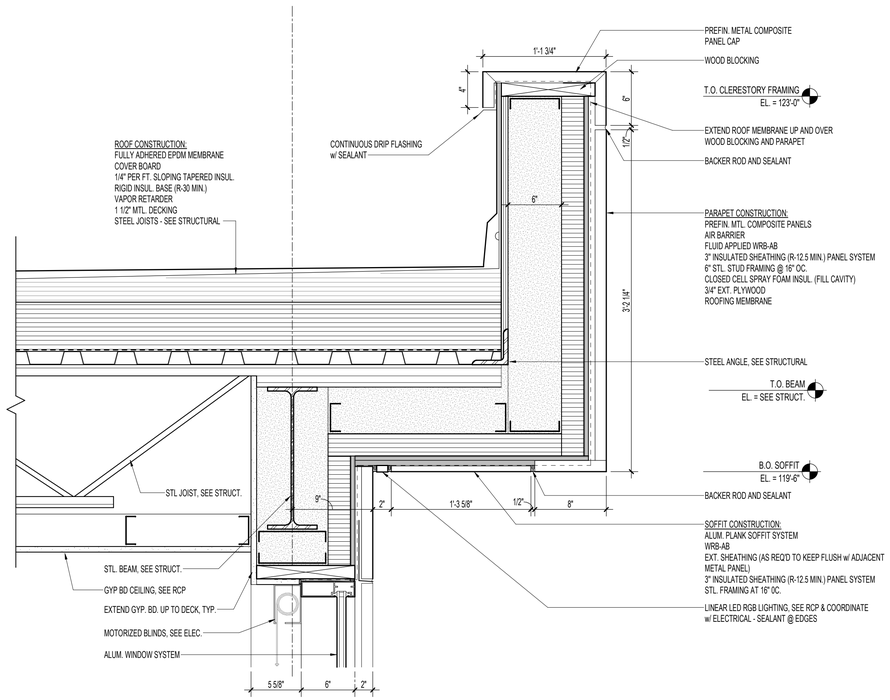

2 A1.4 **PARAPET DETAIL @ CLERESTORY**
1 1/2" = 1'-0"

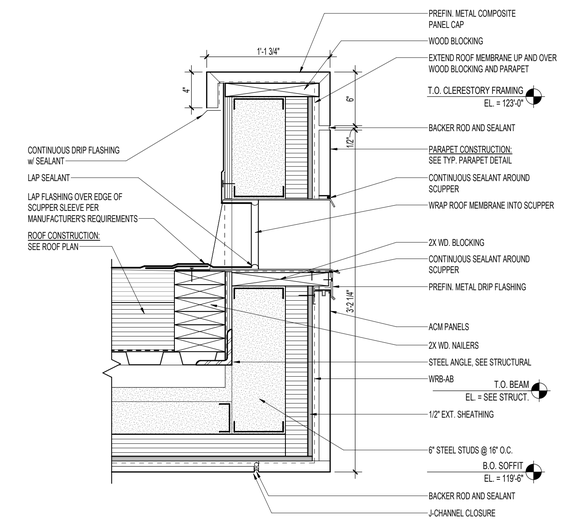

3 A1.4 **SCUPPER DETAIL @ CLERESTORY PARAPET**
1 1/2" = 1'-0"

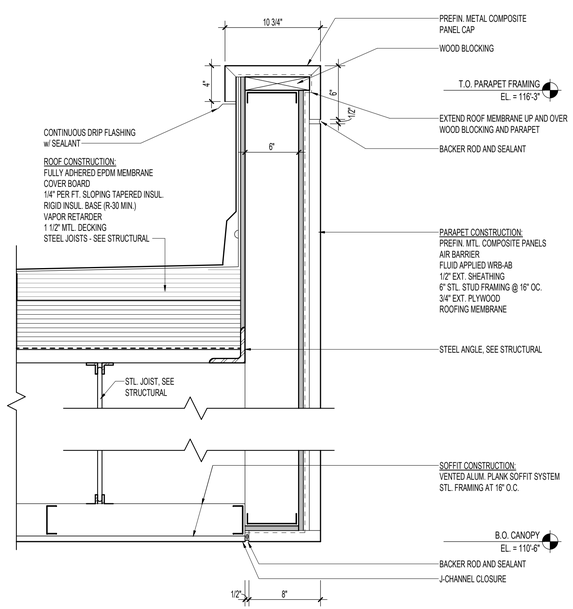

4 A1.4 **PARAPET DETAIL @ DRIVE-THRU CANOPY**
1 1/2" = 1'-0"

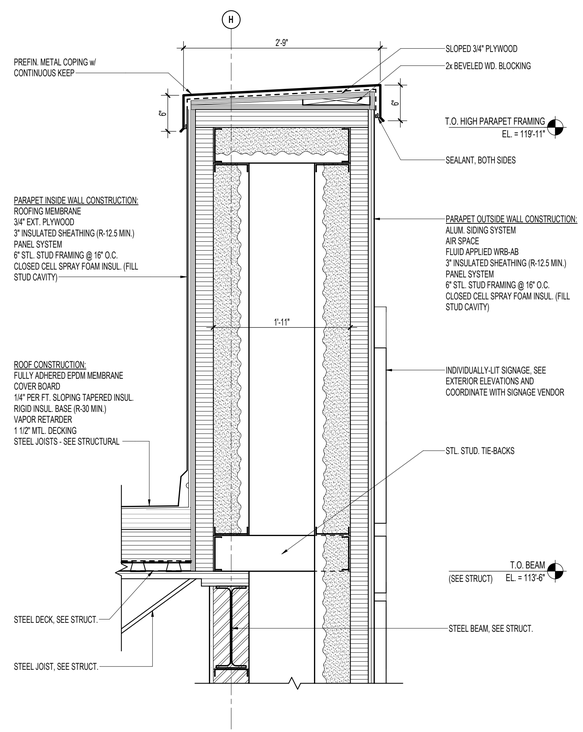

5 A1.4 **PARAPET DETAIL @ SIGN WALL**
1" = 1'-0"

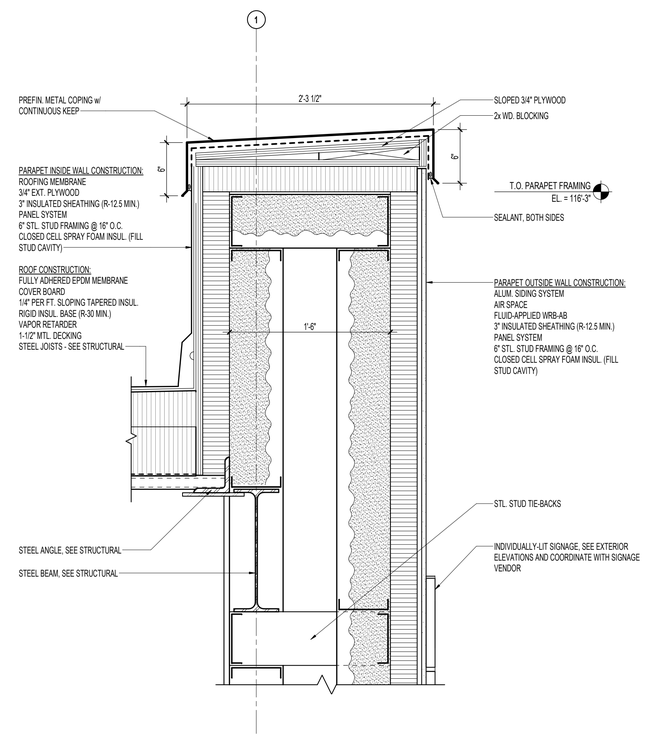

6 A1.4 **PARAPET DETAIL @ LOW SIGN WALL**
1 1/2" = 1'-0"

Autodesk Docs://Mayo Employees FCU-La Crosse-WI/251167_Arch_Central_R25.rvt
3/27/2026 2:46:17 PM

HTG architects
www.htg-architects.com
Minneapolis Bismarck
1010 Mainstreet, Suite 100
Hopkins, MN 55343
Tel: 952.278.8880

PROJECT

MAYO EMPLOYEES FEDERAL CREDIT UNION

NEW BUILDING

605 WEST AVE S.
LA CROSSE, WI

BID SET	03/27/2026
REVISIONS	
DATE	NO

WISCONSIN SEAN RABOIN 12055 HOPKINS, MN ARCHITECT

SEAN C. RABOIN
12055 03/27/2026
Reg No. Date

ROOF DETAILS

Drawn By: SRC Checked By: RBB

A1.4

251167

COPYRIGHT © HTG ARCHITECTS

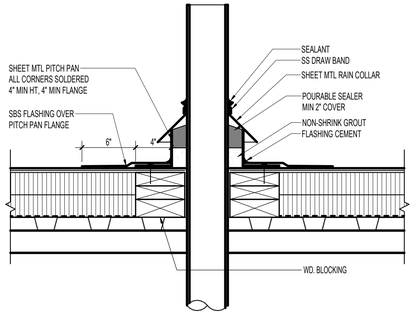

1 A1.5 **TYPICAL ROOF PENETRATION DETAIL**
1 1/2" = 1'-0"

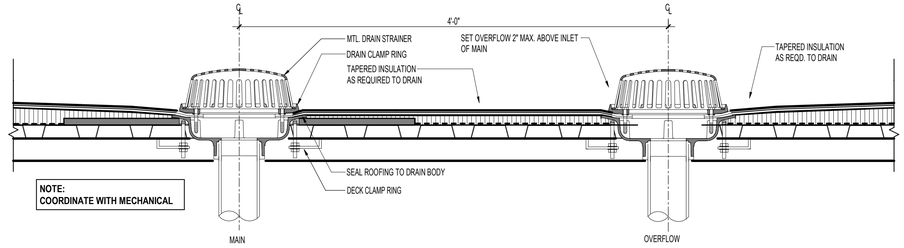

NOTE:
COORDINATE WITH MECHANICAL

2 A1.5 **ROOF DRAIN AND OVERFLOW DRAIN DETAIL**
1 1/2" = 1'-0"

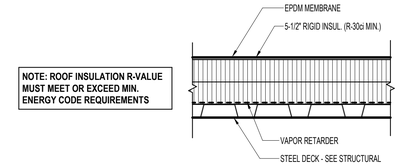

NOTE: ROOF INSULATION R-VALUE
MUST MEET OR EXCEED MIN.
ENERGY CODE REQUIREMENTS

3 A1.5 **TYPICAL BUILDING ROOF DETAIL**
1 1/2" = 1'-0"

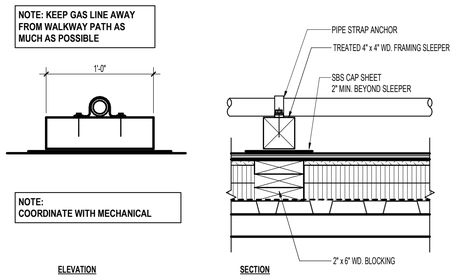

NOTE: KEEP GAS LINE AWAY
FROM WALKWAY PATH AS
MUCH AS POSSIBLE

NOTE:
COORDINATE WITH MECHANICAL

4 A1.5 **PIPE SUPPORT DETAIL**
1 1/2" = 1'-0"

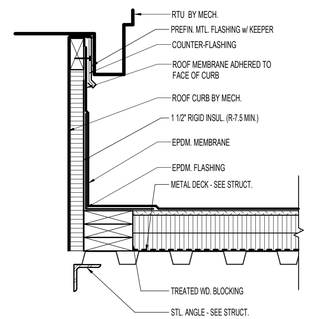

5 A1.5 **TYP. MECH. CURB DETAIL**
1 1/2" = 1'-0"

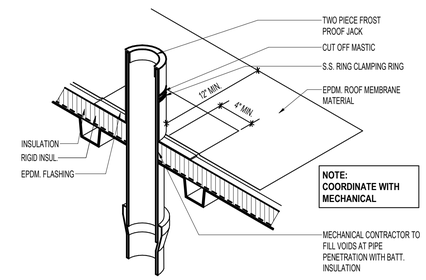

NOTE:
COORDINATE WITH
MECHANICAL

6 A1.5 **PLUMBING VENT FLASHING DETAIL**
1 1/2" = 1'-0"

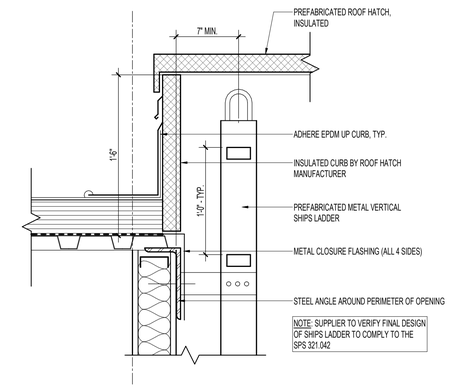

7 A1.5 **ROOF HATCH DETAIL**
1 1/2" = 1'-0"

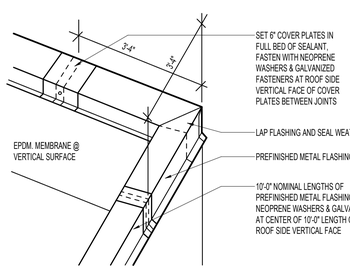

8 A1.5 **CAP FLASHING ISOMETRIC**
1 1/2" = 1'-0"

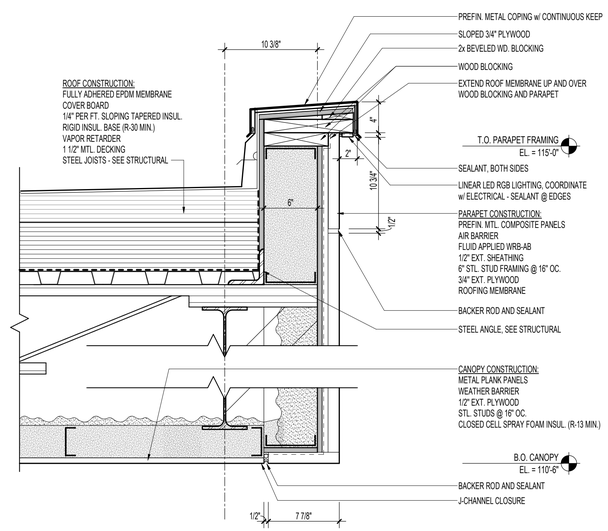

9 A1.5 **PARAPET DETAIL @ ENTRY CANOPY**
1 1/2" = 1'-0"

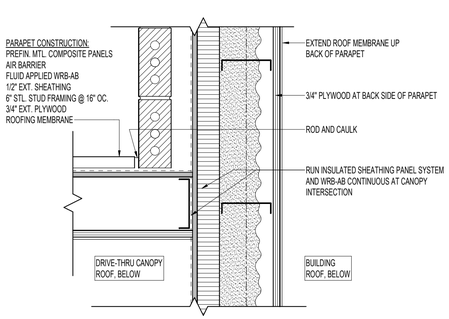

10 A1.5 **PLAN DETAIL @ CANOPY/BUILDING INTERSECTION**
1 1/2" = 1'-0"

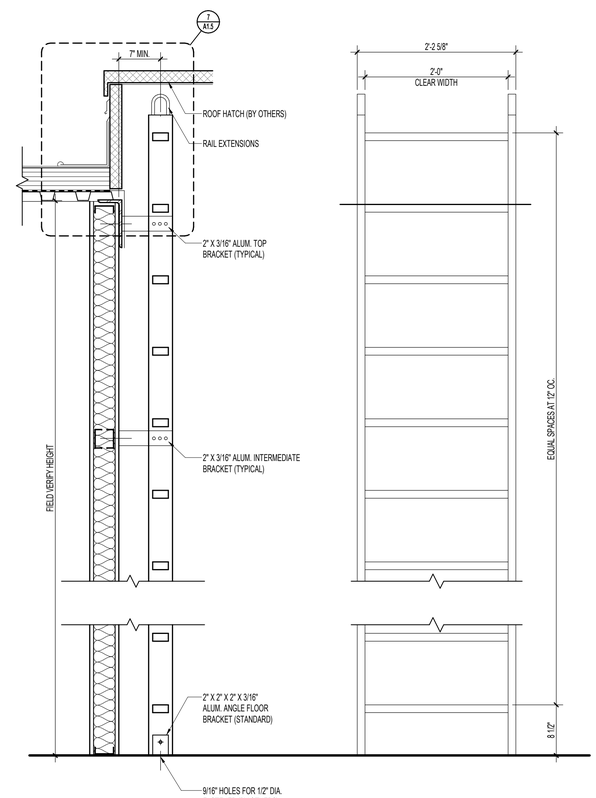

11 A1.5 **VERTICAL SHIPS LADDER SECTION AND ELEVATION**
1" = 1'-0"

HTG architects
www.htg-architects.com
Minneapolis Bismarck
1010 Mainstreet, Suite 100
Hopkins, MN 55343
Tel: 952.278.8880

PROJECT

MAYO EMPLOYEES FEDERAL CREDIT UNION

NEW BUILDING

605 WEST AVE S.
LA CROSSE, WI

BID SET	03/27/2026

REVISIONS

DATE	NO	

WISCONSIN SEAN RABOIN 12055 HOPKINS MN ARCHITECT

SEAN C. RABOIN
12055 03/27/2026
Reg No. Date

ROOF DETAILS

Drawn By: Author Checked By: Checker

A1.5

251167

COPYRIGHT © HTG ARCHITECTS

Autodesk Docs:\Mayo Employees FCU-La Crosse-HVD251167_Arch_Central_R25.rvt
3/27/2026 2:46:18 PM

MAIN LEVEL DOOR SCHEDULE

SEE 1/A7.1 - 2/A7.1 AND 3/A7.1 - 10/A7.1 FOR DOOR AND FRAME ELEVATIONS

DOOR#	DOOR OPENING SIZE	DOOR		FRAME		RATING	HARDWARE GROUP	NOTES
		PANEL 1 WIDTH	MAT.U TYPE	MAT.U TYPE	DETAIL			
101	3'-0"x7'-0"x1 3/4"	3'-0"	AL-FGe	--			07	1, 2
102	3'-0"x7'-0"x1 3/4"	3'-0"	AL-FGi	--			06	1, 2
106	3'-0"x7'-0"x1 3/4"	3'-0"	WD-Fi	HM-1			04	
108	3'-0"x7'-0"x1 3/4"	3'-0"	WD-Fi	HM-1			01	
109	3'-0"x7'-0"x1 3/4"	3'-0"	WD-Fi	HM-1			01	
110	3'-0"x7'-0"x1 3/4"	3'-0"	WD-Fi	HM-3			01	
111	3'-0"x7'-0"x1 3/4"	3'-0"	WD-Fi	HM-2			01	
112	3'-0"x7'-0"x1 3/4"	3'-0"	WD-Fi	HM-3			01	
113	3'-0"x7'-0"x1 3/4"	3'-0"	WD-Fi	HM-2			01	
114	3'-0"x7'-0"x1 3/4"	3'-0"	WD-Fi	HM-1			03	
115	3'-0"x7'-0"x1 3/4"	3'-0"	WD-Fi	HM-1			02	3, 4
116A	3'-0"x7'-0"x1 3/4"	3'-0"	WD-Fi	HM-1			04	
116B	3'-0"x7'-0"x1 3/4"	3'-0"	HM-Fe	HM-1			05	
119	3'-0"x7'-0"x1 3/4"	3'-0"	WD-Fi	HM-1			02	3, 4
120	3'-0"x7'-0"x1 3/4"	3'-0"	WD-Fi	HM-1			02	3, 4

1. AUTOMATIC HCP. DOOR OPENER.
2. ELECTRIC LOCK (BY G.C.) & CARD READER/FOB. (DEVICE BY OTHERS).
3. COAT HOOK.
4. MORTISE PRIVACY INDICATOR

TOILET ROOM KEY:

ADA WC	ACCESSIBLE WATER CLOSET
CT	CERAMIC TILE
EWCB	ELECTRIC WATER COOLER w/ BOTTLE FILLER
FD	FLOOR DRAIN
GB	GRAB BAR
MR	MIRROR
PH	PURSE HOOK
PTD	PAPER TOWEL DISPENSER
SD	SOAP DISPENSER
SND	SANITARY NAPKIN DISPOSAL
TPH	TOILET PAPER HOLDER

TOILET ROOM NOTES:

1. **DO NOT SLOPE FLOOR TO DRAIN. VERIFY FLOOR DRAIN LOCATION w/ MECH.**
2. **BOTTOM OF MIRROR TO BE 38" A.F.F.**
3. **PROVIDE GRAB BARS @ 42" ON SIDE WALL 36" ON BACK WALL & 18" VERT. BAR. SEE ELEVATIONS FOR LOCATIONS.**
4. **TOP OF LAVATORY TO BE MAX. 34" A.F.F.**
5. **SOUND INSULATE WALLS & SOUND BATT. ON ACT.**
6. **MAINTAIN 18" CLEAR AT STRIKE SIDE OF ALL TOILET COMPARTMENT DOORS - TYP.**
7. **SEE FINISH PLANS ON F1 FOR ADDITIONAL INFORMATION.**
8. **CAULK JOINT AROUND PLUMBING FIXTURES & MIRROR - TYP.**
9. **EPOXY PAINTED WALLS AT LOCATIONS WITHOUT C.T.**

(A) BANK EQUIPMENT KEYED LIST

BANK EQUIPMENT KEYED LIST (N.I.C. PROVIDED AND INSTALLED BY OWNER'S EQUIPMENT VENDOR. GC TO COORDINATE OPENING HEIGHTS, SIZES, AND POWER/DATA REQUIREMENTS)

NO.	DESCRIPTION
A	TELLER CASH RECYCLER (TCR). SEE MILLWORK DETAILS
B	SELF SERVICE COIN COUNTER (CC). SEE DETAIL THIS SHEET
C	ELECTRIC DEAL DRAWER (DD). SEE MILLWORK DETAILS
D	3'-0"H. x 10'-0"L. BULLET-RESISTANT (BR) WINDOW & FRAME FINISHED TO MATCH STOREFRONT FRAMES. SEE FRAME TYPES
E	PNEUMATIC REMOTE DRIVE-UP KIOSK, UPSEND TYPE
F	PNEUMATIC TUBES ABOVE W/ 20" MIN. CENTERLINE RADIUS CORNERS
G	PNEUMATIC OPERATOR UNIT, INSTALL CENTERED ON BR WINDOW UNIT U.N.O.
H	THRU-WALL NIGHT DEPOSITORY (ND) HEAD AND CHEST WITH 1" STEEL SURROUND. SEE DETAIL THIS SHEET
J	FREESTANDING DRIVE-UP INTERACTIVE TELLER MACHINE (ITM)
M	STEEL VAULT DOOR 180 DEG. SWING WITH FLOOR/ WALL STOP
N	SERVER/ IT RACK (ROOM 106) - SEE ELEC.
O	FREESTANDING PRINTER/ COPIER
P	PRINTER IN CABINETRY

(00) KEYED PLAN NOTES

NO.	DESCRIPTION
2	FLOOR MOUNTED JANITORS SINK w/ FRP ON WALL (2) SIDES 2'-6" WIDE x 4'-0" HIGH SEE MECHANICAL DRAWINGS FOR SINK CONNECTIONS & SIZES
3	34" WIDE - WALL MTD. MOP HANGER & SHELF. PROVIDE PLYWOOD BLOCKING. SEE SPEC. FOR MORE INFORMATION
4	STEEL ROOF LADDER FOR ROOF ACCESS - SEE DETAIL _____
6	SEMI-RECESSED ELECTRIC FIRE PLACE- SEE SPECS.
7	TV AND MOUNTING BRACKET - BY OWNER. GC TO INSTALL AND PROVIDE PLYWOOD BACKING AS REQUIRED
8	WATER SOFTENER - SEE MECHANICAL DRAWINGS
9	WATER HEATER - SEE MECHANICAL DRAWINGS
10	ELECTRIC WATER COOLER WITH BOTTLE FILLER - SEE MECHANICAL DRAWINGS
11	ELECTRICAL PANEL - SEE ELECTRICAL DRAWINGS

GENERAL NOTES:

1. **CONTACT ARCHITECT IMMEDIATELY IF CONFLICTS ARISE w/ INSTALLATION OF ACCESSORIES & EQUIPMENT. NO CHANGES ACCEPTABLE UNLESS SHOWN ON PLAN OR APPROVED BY ARCHITECT.**
2. **MOUNT FIRE EXTINGUISHER CABINETS @ 5'-0" A.F.F. TO TOP OF CABINET. FINAL LOCATIONS TO BE VERIFIED BY LOCAL FIRE CHIEF.**
3. **GENERAL CONTRACTOR TO PROVIDE ALL NECESSARY BLOCKING IN WALLS FOR WALL-HUNG ITEMS (CABINETS, SHELVING, COUNTERTOPS, ... etc.)**
4. **ALL MECHANICAL, ELECTRICAL AND PLUMBING BY DESIGN BUILD CONTRACTOR.**
5. **ALL STOOP SLABS AND APRONS TO BE POURED WITH SIDEWALK TO MATCH FINISH, TOOLING, & JOINTS**
6. **ACT CEILING TO BE CENTERED IN EACH TOILET ROOM. U.N.O.**
7. **FUR OUT WALLS AROUND ROOF DRAIN RAIN WATER LEADER (RD. RWL.) & OVERFLOW ROOF DRAIN RAIN WATER LEADER (OD. RWL.) w/ 5/8" GYP. BD. ON 2 1/2" STL. STUDS- VFY. LOCATIONS w/ MECH.**
8. **INTERIOR COLUMNS TO BE FINISHED w/ 5/8" GYP. BD. ON 7/8" STL. FURRING CHANNELS w/ MTL. J-BEADS @ EACH CORNER- SEE ENLARGED DETAILS. REFER TO STRUCTURAL DRAWINGS FOR STEEL COLUMN SIZES.**
9. **DOORS WITH MARKING "CR" INDICATE THE SIDE OF THE DOOR TO RECEIVE SECURE ACCESS CREDENTIAL READER - SEE DOOR SCHEDULE**
10. **INTERIOR PARTITIONS SHALL BE 3-5/8" STL. STUDS @ 16" O.C. w/ 5/8" GYP. BD. ON EA. SIDE EXTENDED 4" ABOVE CEILING-UNLESS NOTED OTHERWISE. SEE WALL TYPES ON THIS SHEET ____**
11. **ALL INTERIOR WALLS DIMENSIONED TO GYP. BD. FINISH FACE U.N.O.**
12. **ALL OFFICES, BOARD ROOM, BREAK ROOM, AND COMMUNITY ROOM WALLS TO EXTEND TO DECK WITH SOUND BATT INSULATION**
13. **INSTALL ALL DOOR FRAMES 3" OFFSET FROM ADJACENT WALL FINISH FACES UNLESS NOTED OTHERWISE**
14. **FURNITURE BY OWNER SHOWN WITH DASHED LINEWORK**

WALL TYPES

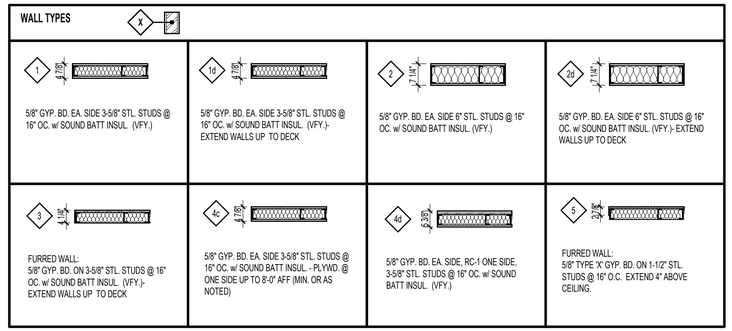

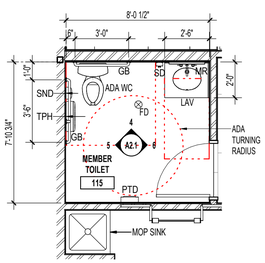

2 / A2.1 ENLARGED TOILET PLAN - MEMBERS
1/4" = 1'-0"

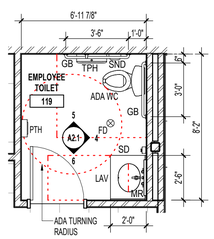

3 / A2.1 ENLARGED TOILET PLAN - EMPLOYEES
1/4" = 1'-0"

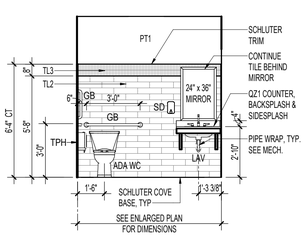

4 / A2.1 TOILET ROOM ELEVATION - PLUMBING
1/4" = 1'-0"

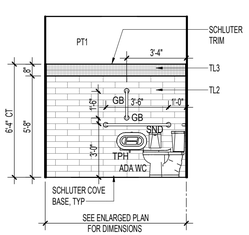

5 / A2.1 TOILET ROOM ELEVATION - GRAB BARS
1/4" = 1'-0"

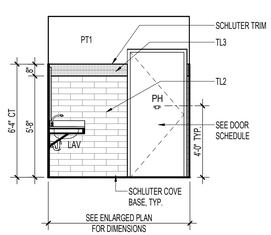

6 / A2.1 TOILET ROOM ELEVATION - ENTRY
1/4" = 1'-0"

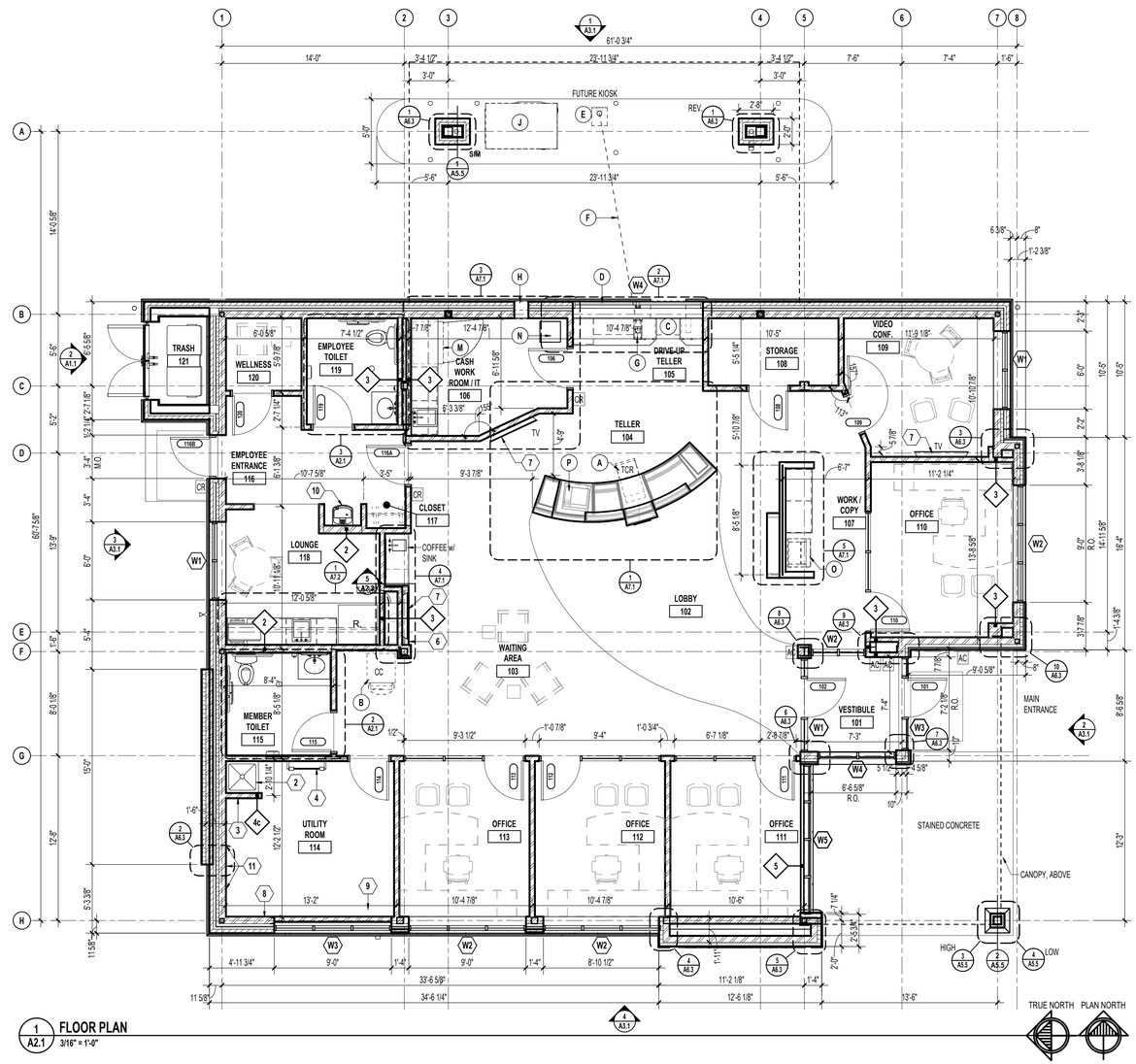

1 / A2.1 FLOOR PLAN
3/16" = 1'-0"

HTG architects
www.htg-architects.com
Minneapolis Bismarck
1010 Mainstreet, Suite 100
Hopkins, MN 55343
Tel: 952.278.8880

PROJECT

MAYO EMPLOYEES FEDERAL CREDIT UNION

NEW BUILDING

605 WEST AVE S.
LA CROSSE, WI

BID SET	03/27/2026
REVISIONS	
DATE NO	

WISCONSIN SEAN RABOIN 12055 HOPKINS MN ARCHITECT

SEAN C. RABOIN
12055 03/27/2026
Reg No. Date

FLOOR PLAN, SCHEDULES, AND ENLARGED TOILET PLANS

Drawn By: SRC Checked By: SCR

A2.1

251167

COPYRIGHT © HTG ARCHITECTS

Autodesk Docs://Mayo Employees FCU-La Crosse-WI/251167_Arch_Central_R25.rvt
3/27/2026 3:46:21 PM

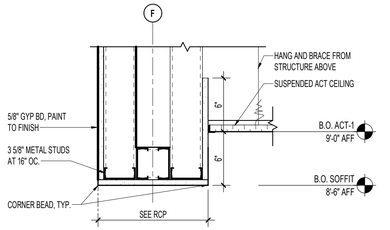

4 A2.2 **SOFFIT DETAIL**
1 1/2" = 1'-0"

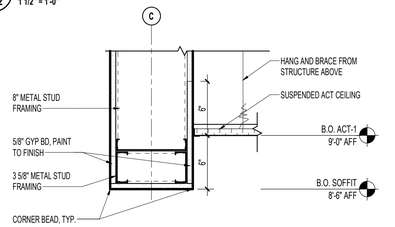

6 A2.2 **SOFFIT DETAIL @ DRIVE-UP TELLER**
1 1/2" = 1'-0"

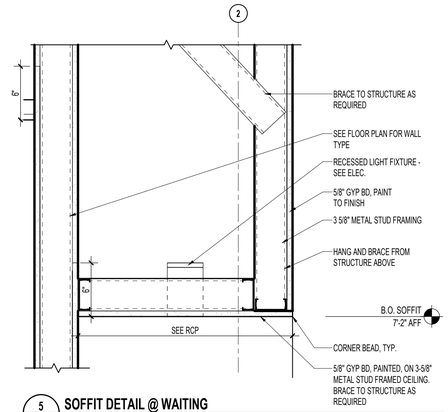

5 A2.2 **SOFFIT DETAIL @ WAITING**
1 1/2" = 1'-0"

00 KEYED CEILING PLAN NOTES

NO.	DESCRIPTION
1	CONTROL JOINTS TO BE EVENLY SPACED BETWEEN COLUMNS AND RUN VERTICALLY TO CLERESTORY ABOVE
2	COORDINATE LIGHT FIXTURE LOCATIONS WITH ELECTRICAL AND BANK EQUIP. SUPPLIER
3	2'X2' ACCESS PANEL, COORDINATE WITH BANK EQUIP. SUPPLIER
4	FUTURE PNEUMATIC TUBE LOCATION, COORDINATE WITH BANK EQUIP. SUPPLIER AND ELECTRICAL
5	LANE LIGHTS, SEE ELECTRICAL (2-THUS)
6	EXTERIOR BACKLIT SIGN. SEE ELEVATIONS, COORDINATE WITH ELECTRICAL AND SIGN VENDOR.
7	DASHED LINE INDICATES LINEAR LIGHTING AT B.O. CLERESTORY CANOPY, COORDINATE WITH ELECTRICAL (ALL FOUR SIDES)

REFLECTED CEILING PLAN LEGEND

- GYP. BD. CEILING SOFFIT w/ PAINT FINISH - SEE SPEC...
- ACT. 1 - 2'x2' SUSPENDED CEILING GRID w/ 2'x2' PAINTED MINERAL FIBER PANELS
- 8" VENTED PREFINISHED FLUSH LINEAR METAL CEILING SYSTEM
- 2'X2' RECESSED FLUORESCENT LT. FIXTURE
- RECESSED DOWNLIGHT LIGHT FIXTURE
- SURFACE MOUNTED UTILITY LIGHT FIXTURE
- EXIT LIGHT - SINGLE-SIDED
- 2'X2' CEILING DIFFUSER- SEE MECHANICAL
- 2'X2' CEILING RETURN - SEE MECHANICAL
- 2'X2' CEILING DIFFUSER- SEE MECHANICAL
- 2'X2' CEILING DIFFUSER- SEE MECHANICAL
- JUNCTION BOX, CEILING MOUNTED
- CEILING MOUNTED FOURPLEX RECEPTACLE
- CEILING MOUNTED DUPLEX RECEPTABLE

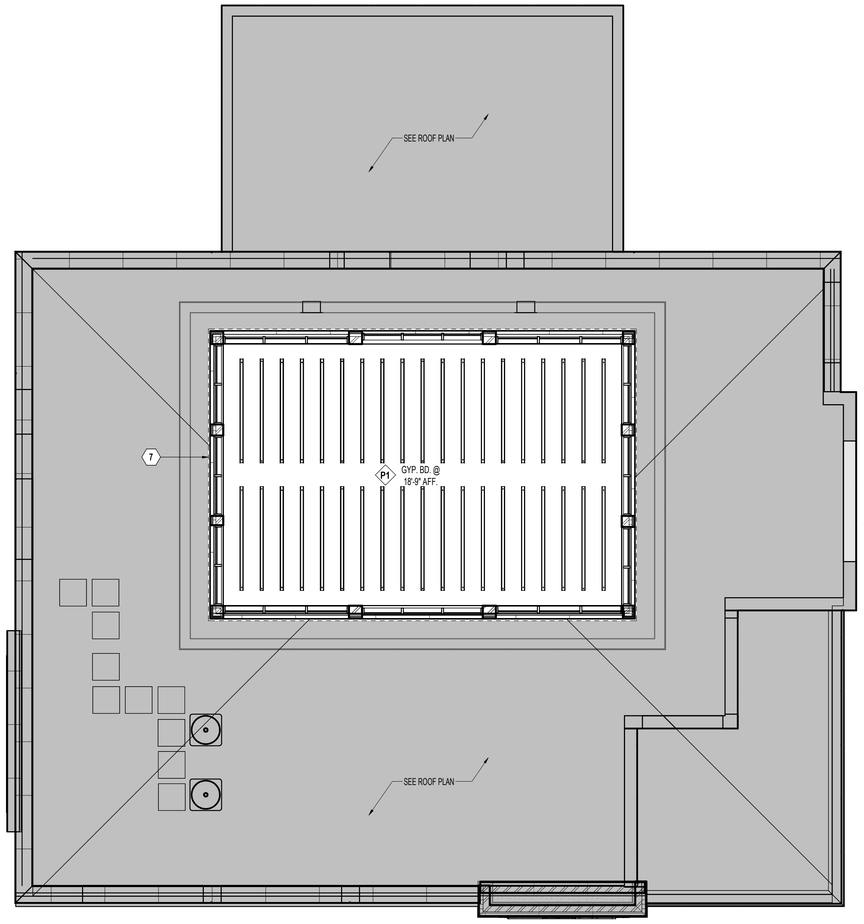

3 A2.2 **CLERESTORY RCP**
3/16" = 1'-0"

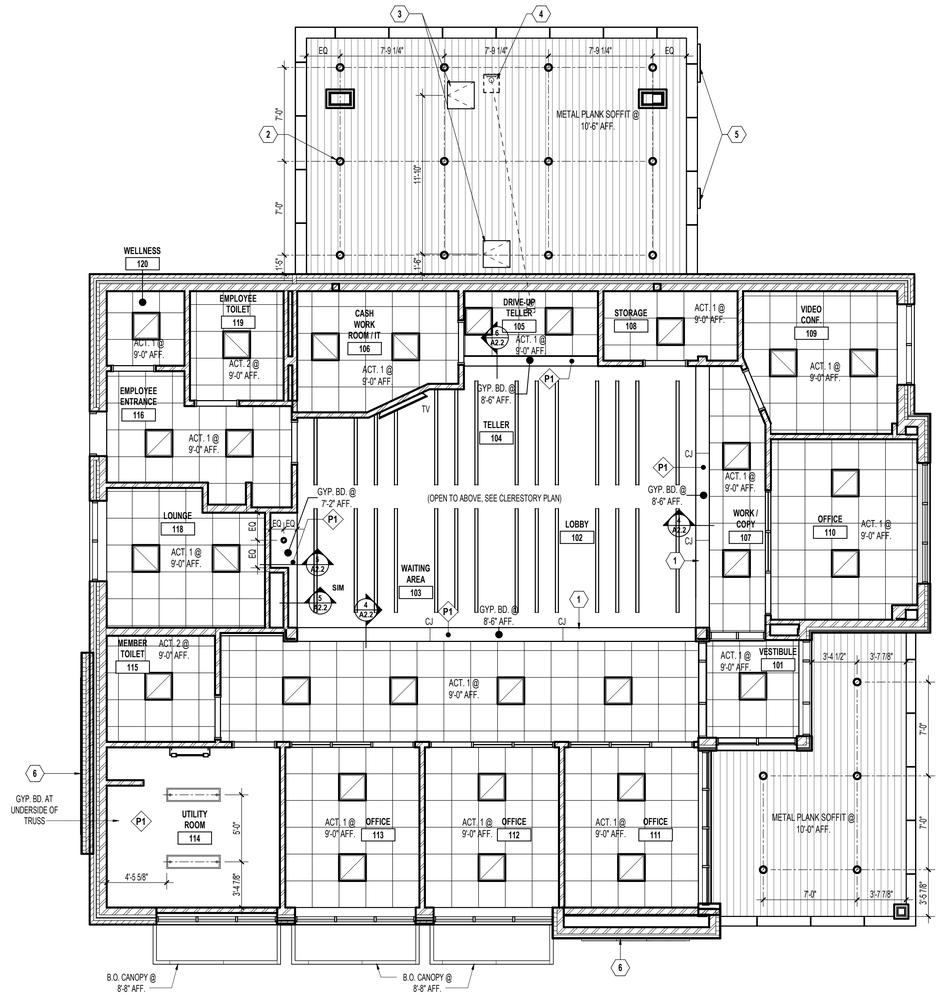

1 A2.2 **MAIN LEVEL RCP**
3/16" = 1'-0"

TRUE NORTH PLAN NORTH

HTG architects
www.htg-architects.com
Minneapolis Bismarck
1010 Mainstreet, Suite 100
Hopkins, MN 55343
Tel: 952.278.8880

PROJECT

MAYO EMPLOYEES FEDERAL CREDIT UNION

NEW BUILDING

605 WEST AVE S.
LA CROSSE, WI

BID SET	03/27/2026
REVISIONS	
DATE NO	

WISCONSIN SEAN RABOIN 12055 HOPKINS, MN ARCHITECT

SEAN C. RABOIN
12055 03/27/2026
Reg No. Date

MAIN LEVEL REFLECTED CEILING PLAN

Drawn By: Author Checked By: Checker

A2.2

251167

COPYRIGHT © HTG ARCHITECTS

Autodesk Docs://Mayo Employees FCU La Crosse-WI/251167_Arch_Central_R23.rvt
3/27/2026 2:46:24 PM

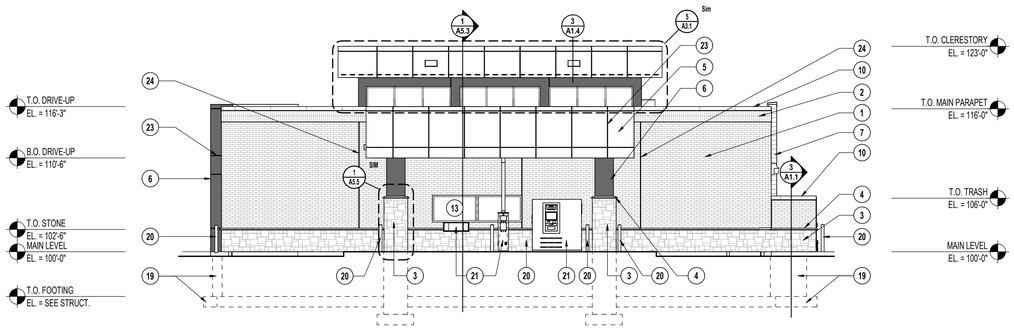

1 A3.1 NORTH ELEVATION
1/8" = 1'-0"

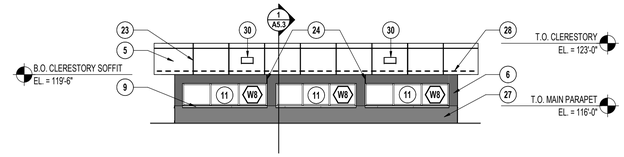

5 A3.1 NORTH CLERESTORY ELEVATION
1/8" = 1'-0"

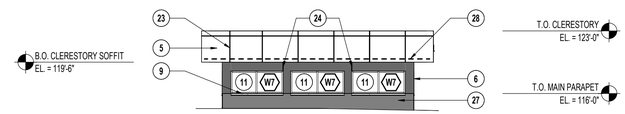

6 A3.1 EAST CLERESTORY ELEVATION
1/8" = 1'-0"

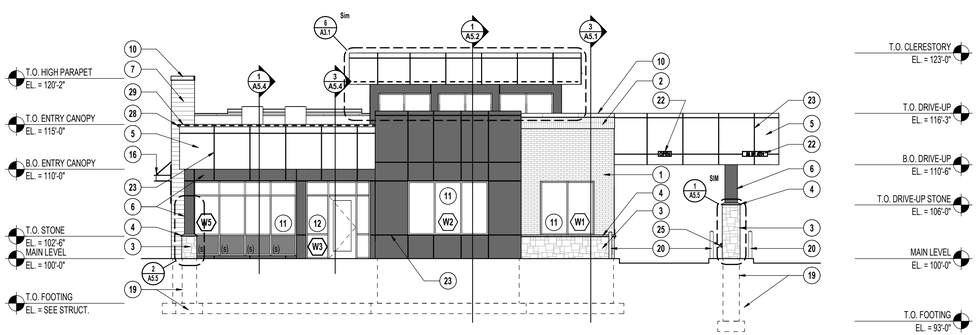

2 A3.1 EAST ELEVATION
1/8" = 1'-0"

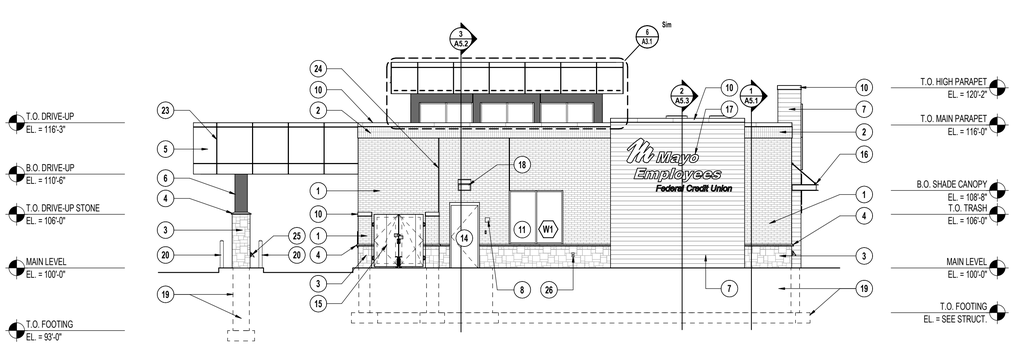

3 A3.1 WEST ELEVATION
1/8" = 1'-0"

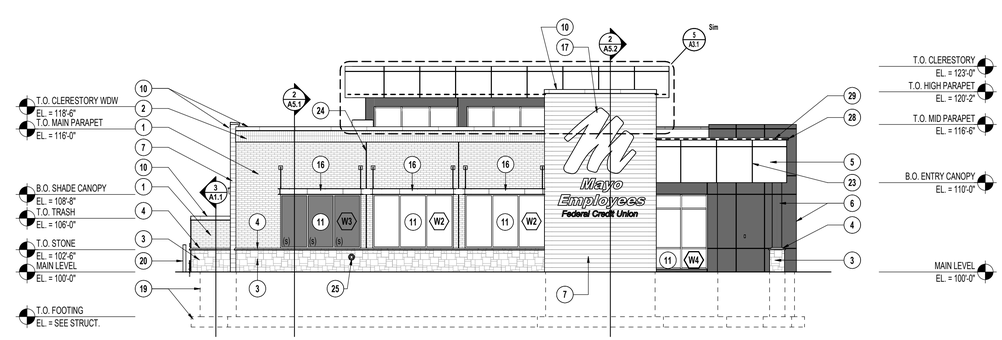

4 A3.1 SOUTH ELEVATION
1/8" = 1'-0"

00	KEYED NOTES - EXTERIOR ELEVATION
NO.	DESCRIPTION
1	BRICK - CLOUD CERAMICS STYLE: VELOUR MODULAR COLOR: COFFEE
2	(2) ROWS OF STACKED SOLDIER BRICK COURSING - MATCH TYPICAL BRICK STYLE & COLOR
3	NATURAL STONE BASE - BUECHEL STONE STYLE: TAILORED BLEND COLOR: SILVERDALE
4	NATURAL STONE SILL - BUECHEL STONE STYLE / COLOR: MATCH STONE BASE
5	ACM-1 - ALUCOBOND PLUS SYSTEM: WET SEAL PANEL SYSTEM COLOR: TBD
6	ACM-2 - ALUCOBOND PLUS SYSTEM: WET SEAL PANEL SYSTEM COLOR: TBD
7	ALUMINUM SIDING - LONGBOARD SYSTEM: TONGUE & GROOVE - 6" COLOR: TBD
8	KNOCK BOX FOR FIRE DEPARTMENT
9	PREFINISHED METAL SILL - PAC-CLAD (OR EQUAL) COLOR: TBD
10	PREFINISHED METAL COPING - PAC-CLAD (OR EQUAL) COLOR: TBD
11	ALUMINUM STOREFRONT WINDOW COLOR: CLEAR ANODIZED OUTBOARD LITE: BRONZE TINTED GLASS INBOARD LITE: CLEAR GLASS
12	ALUMINUM DOOR & FRAME COLOR: CLEAR ANODIZED
13	ALUMINUM DRIVE-UP WINDOW COLOR: CLEAR ANODIZED
14	INSULATED HOLLOW METAL DOOR COLOR: PAINT SW 7019 GAUNTLET GRAY
15	STEEL TRASH ENCLOSURE GATE COLOR: PAINT SW 7019 GAUNTLET GRAY
16	SHADE CANOPY / EYEBROW - MANUFACTURER? COLOR: PAINT?
17	BACKLIT LOGO SIGNAGE, GC TO COORDINATE W/ ELECTRICAL & OWNER'S SIGNAGE VENDOR
18	EXTERIOR LIGHTING, SEE ELECTRICAL DRAWINGS
19	FOUNDATION WALLS & FOOTINGS, SEE STRUCTURAL DRAWINGS
20	4" DIA. BOLLARD w/ BOLLARD COVER/SLEEVE, COLOR TBD BY ARCH
21	BANK EQUIPMENT, SEE FLOOR PLAN & BANK EQUIPMENT SCHEDULE - COORDINATE W/ BANK EQUIPMENT PROVIDER
22	DRIVE-UP AISLE SIGNAGE, COORDINATE W/ ELECTRICAL & OWNER'S SIGNAGE VENDOR
23	PANEL JOINTS IN ACM, TYP.
24	CONTROL/RELIEF JOINTS, TYP.
25	ROOF DRAINAGE OUTLET / COW'S TONGUE
26	HOSE BIB LOCATION, PROVIDE SMOOTH TRIM STONE @ CONNECTION TO BLDG
27	EPDM ROOFING, WRAP VERTICALLY UP FACE OF CLERESTORY WALL - SEE SECTIONS
28	CONCEALED DECORATIVE LED LIGHTING, SEE ROOF SECTIONS & ELECTRICAL DRAWINGS
29	PREFINISHED METAL COPING - PAC-CLAD (OR EQUAL) - SEE DETAIL COLOR: TBD
30	PREFINISHED METAL SCUPPER - SEE ROOF PLAN & ROOF DETAILS

HTG architects

www.htg-architects.com
Minneapolis Bismarck

1010 Mainstreet, Suite 100
Hopkins, MN 55343
Tel: 952.278.8880

PROJECT

MAYO EMPLOYEES FEDERAL CREDIT UNION

NEW BUILDING

605 WEST AVE S.
LA CROSSE, WI

BID SET 03/27/2026

REVISIONS

DATE	NO	

WISCONSIN SEAN RABOIN 12055 HOPKINS, MN ARCHITECT

SEAN C. RABOIN
12055 03/27/2026
Reg No. Date

EXTERIOR ELEVATIONS

Drawn By: KH Checked By: SCR

A3.1

251167

COPYRIGHT © HTG ARCHITECTS

Autodesk Docs:/Mayo Employees FCU-La Crosse-WI/251167_Arch_Central_R25.rvt
3/27/2026 2:46:28 PM

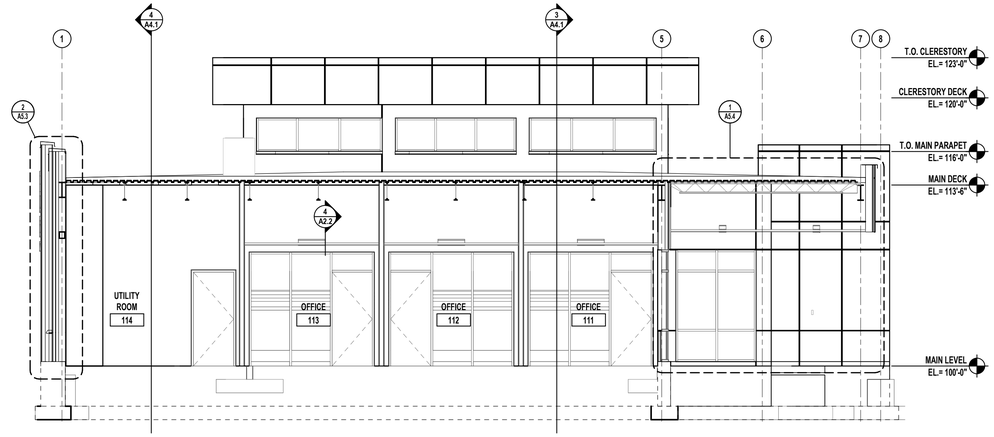

1 A4.1 EAST/WEST BUILDING SECTION (LOOKING TO CLERESTORY)
3/16" = 1'-0"

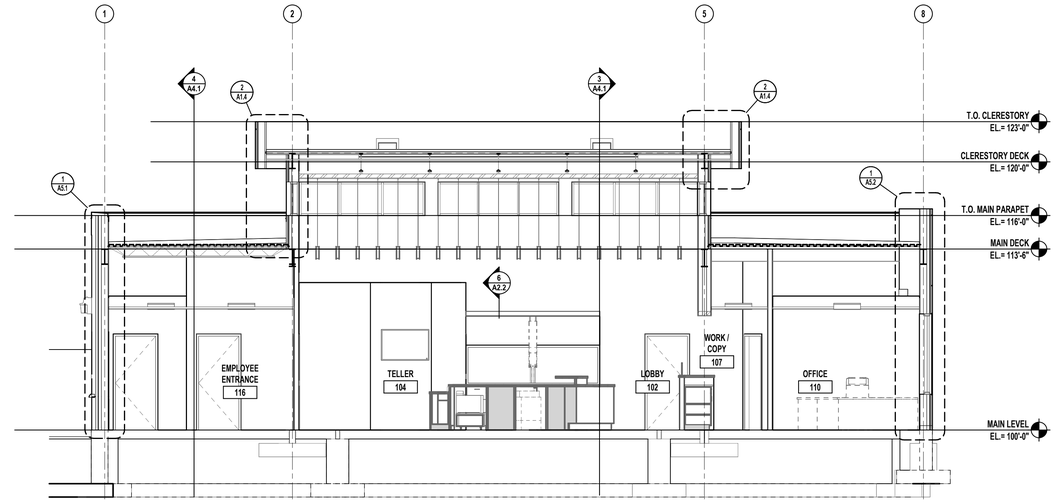

2 A4.1 EAST/WEST BUILDING SECTION (AT CLERESTORY)
3/16" = 1'-0"

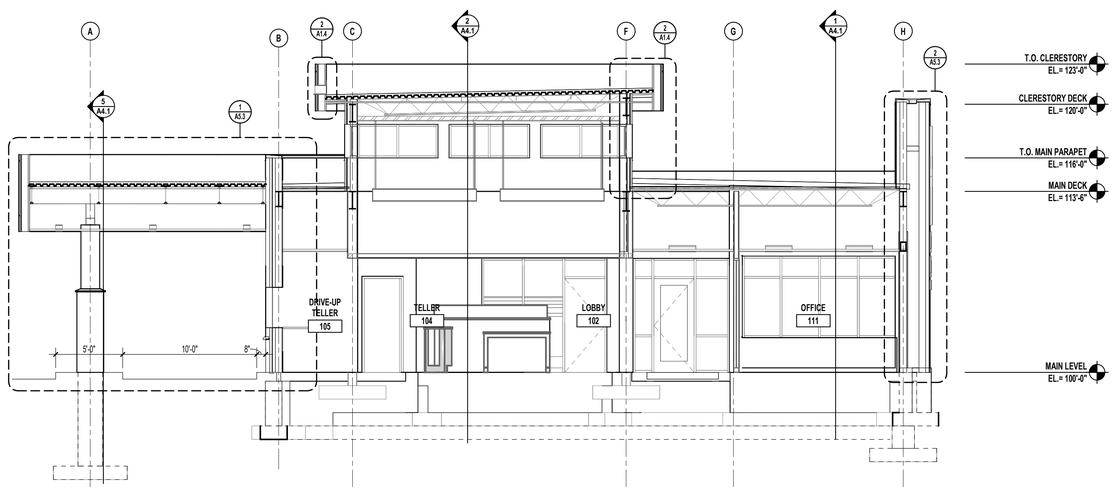

3 A4.1 NORTH/SOUTH BUILDING SECTION (LOOKING EAST)
3/16" = 1'-0"

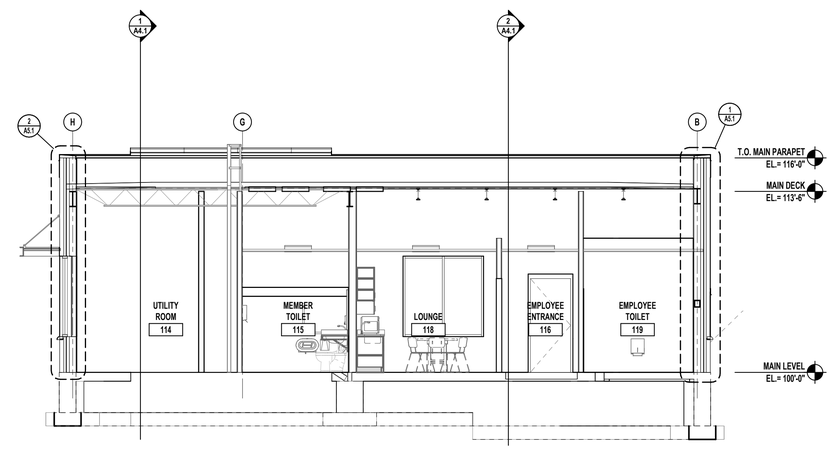

4 A4.1 NORTH/SOUTH BUILDING SECTION (LOOKING WEST)
3/16" = 1'-0"

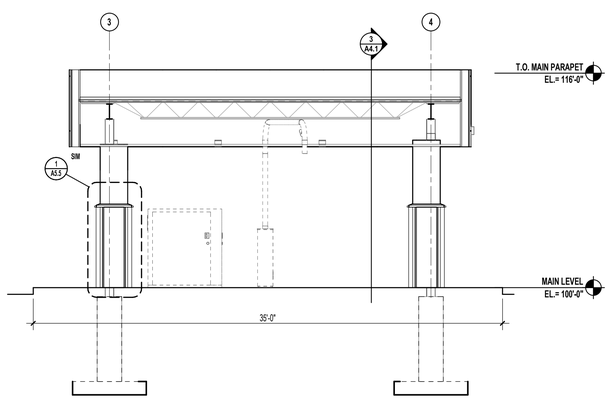

5 A4.1 BUILDING SECTION AT DRIVE-UP
3/16" = 1'-0"

HTG architects

www.htg-architects.com
Minneapolis Bismarck

1010 Mainstreet, Suite 100
Hopkins, MN 55343
Tel: 952.278.8880

PROJECT

MAYO EMPLOYEES FEDERAL CREDIT UNION

NEW BUILDING

605 WEST AVE S.
LA CROSSE, WI

BID SET	03/27/2026
REVISIONS	

DATE	NO	

WISCONSIN SEAN RABOIN 12055 HOPKINS, MN ARCHITECT

SEAN C. RABOIN
12055 03/27/2026
Reg No. Date

BUILDING SECTIONS

Drawn By: SRC Checked By: SCR

A4.1

251167

COPYRIGHT © HTG ARCHITECTS

Autodesk Docs://Mayo Employees FCU-La Crosse-WI/251167_Arch_Central_R25.rvt
3/27/2026 2:46:31 PM

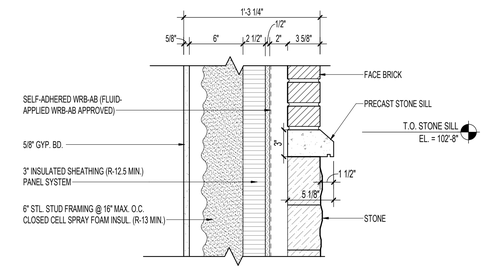

4 / A5.1 DETAIL @ STONE SILL
1 1/2" = 1'-0"

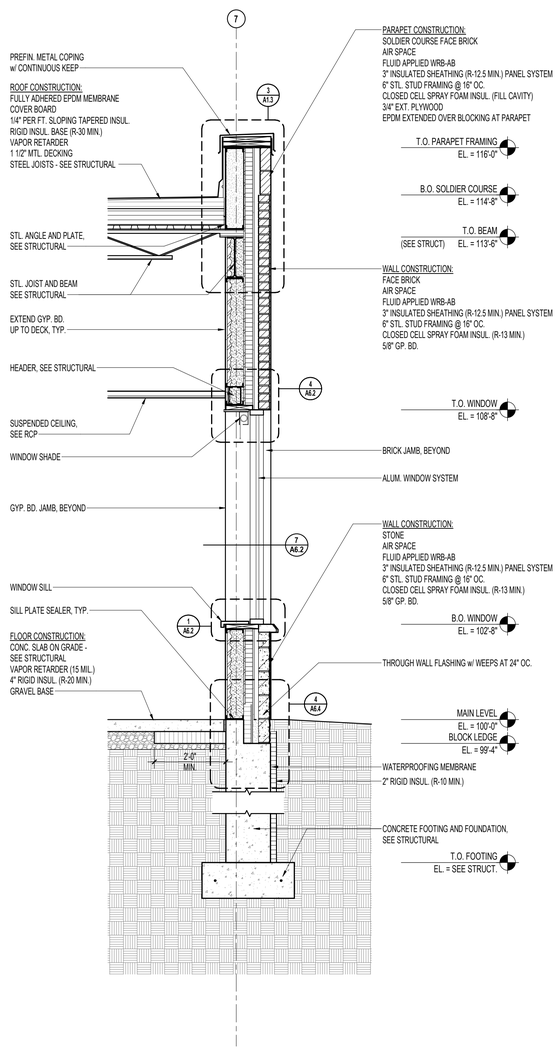

3 / A5.1 WALL SECTION, WINDOW
1/2" = 1'-0"

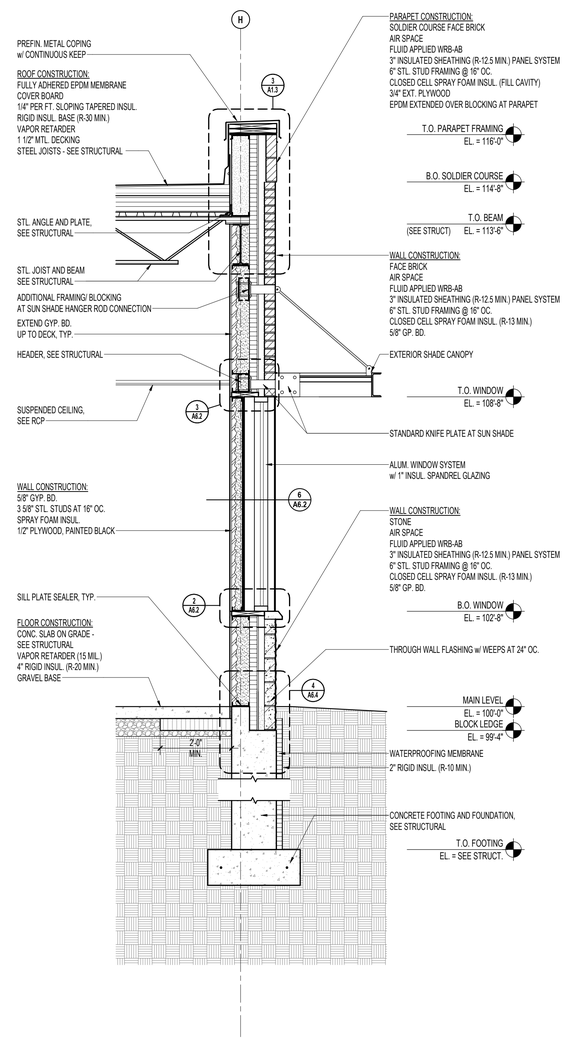

2 / A5.1 WALL SECTION, WINDOW, SPANDREL
1/2" = 1'-0"

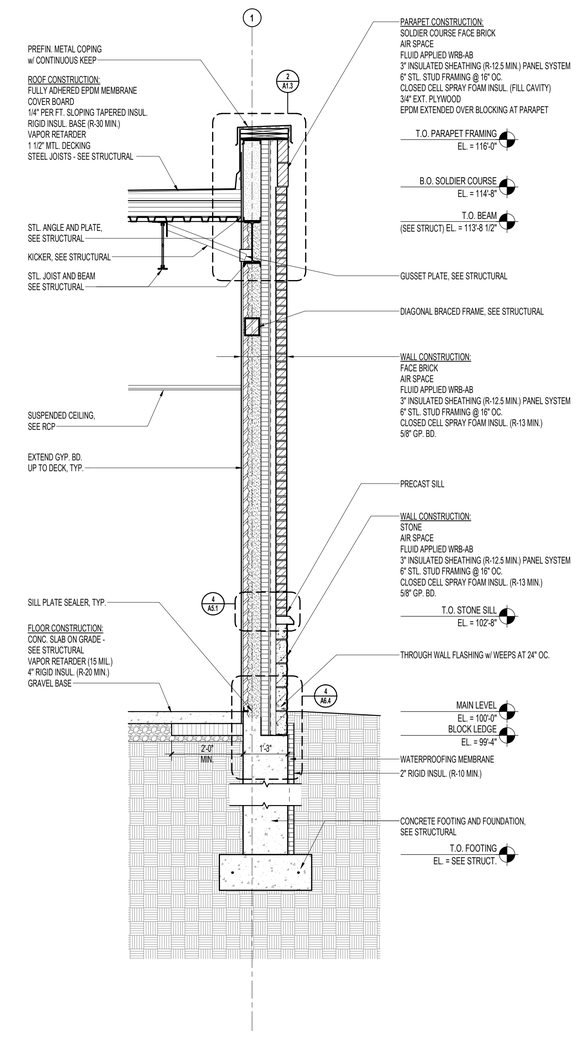

1 / A5.1 WALL SECTION, TYP.
1/2" = 1'-0"

HTG architects
www.htg-architects.com
Minneapolis Bismarck
1010 Mainstreet, Suite 100
Hopkins, MN 55343
Tel: 952.278.8880

PROJECT

MAYO EMPLOYEES FEDERAL CREDIT UNION

NEW BUILDING

605 WEST AVE S.
LA CROSSE, WI

BID SET	03/27/2026
REVISIONS	

DATE	NO	

WISCONSIN SEAN RABOIN 12055 HOPKINS, MN ARCHITECT

SEAN C. RABOIN
12055 03/27/2026
Reg No. Date

WALL SECTIONS

Drawn By: SRC Checked By: SCR

A5.1

251167

COPYRIGHT © HTG ARCHITECTS

Autodesk Docs://Mayo Employees FCU-La Crosse-WI/251167_Arch_Central_R25.rvt
3/27/2026 2:46:32 PM

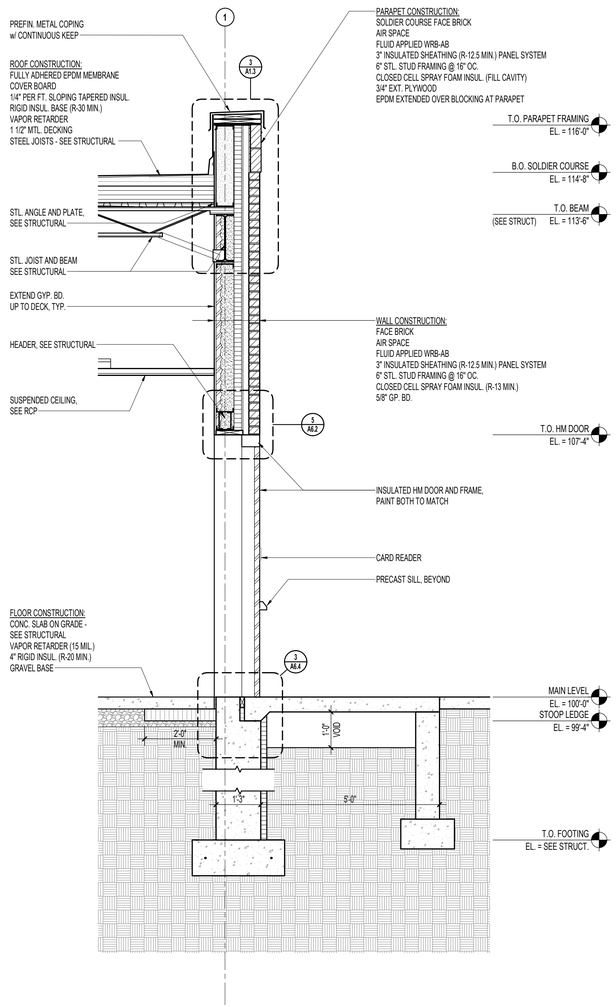

3 A5.2 **WALL SECTION, EMPLOYEE ENTRY**
1/2" = 1'-0"

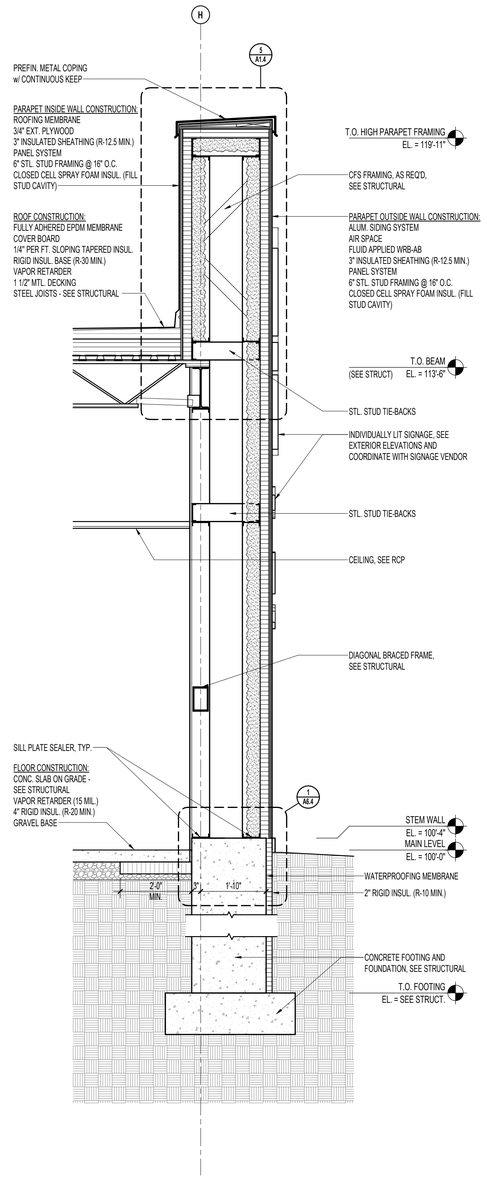

2 A5.2 **WALL SECTION, SIGN WALL**
1/2" = 1'-0"

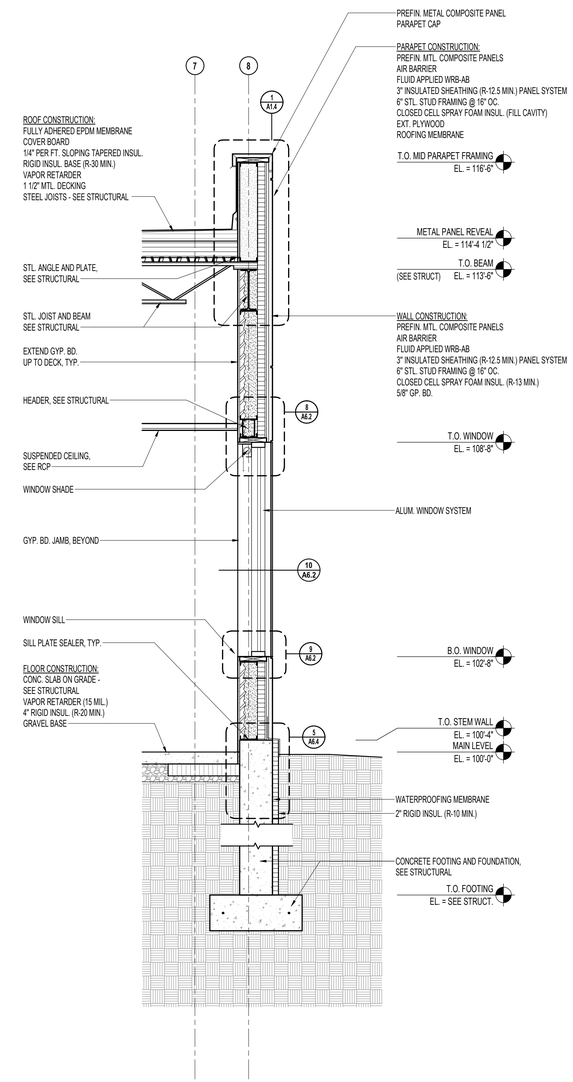

1 A5.2 **WALL SECTION, WINDOW, METAL PANEL**
1/2" = 1'-0"

HTG architects

www.htg-architects.com
Minneapolis Bismarck

1010 Mainstreet, Suite 100
Hopkins, MN 55343
Tel: 952.278.8880

PROJECT

MAYO EMPLOYEES FEDERAL CREDIT UNION

NEW BUILDING

605 WEST AVE S.
LA CROSSE, WI

BID SET 03/27/2026

REVISIONS

DATE	NO	

WISCONSIN SEAN RABOIN 12055 HOPKINS, MN ARCHITECT

SEAN C. RABOIN
12055 03/27/2026
Reg No. Date

WALL SECTIONS

Drawn By: SRC Checked By: SCR

A5.2

251167

COPYRIGHT © HTG ARCHITECTS

Autodesk Docs://Mayo Employees FCU-La Crosse-WI/251167_Arch_Central_R25.rvt
3/27/2026 2:46:34 PM

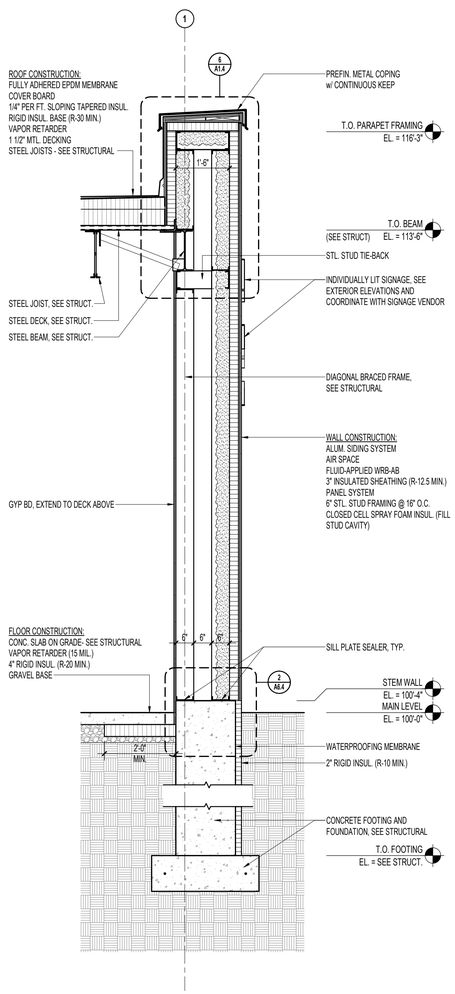

2 A5.3 **WALL SECTION AT DOUBLE WALL**
1/2" = 1'-0"

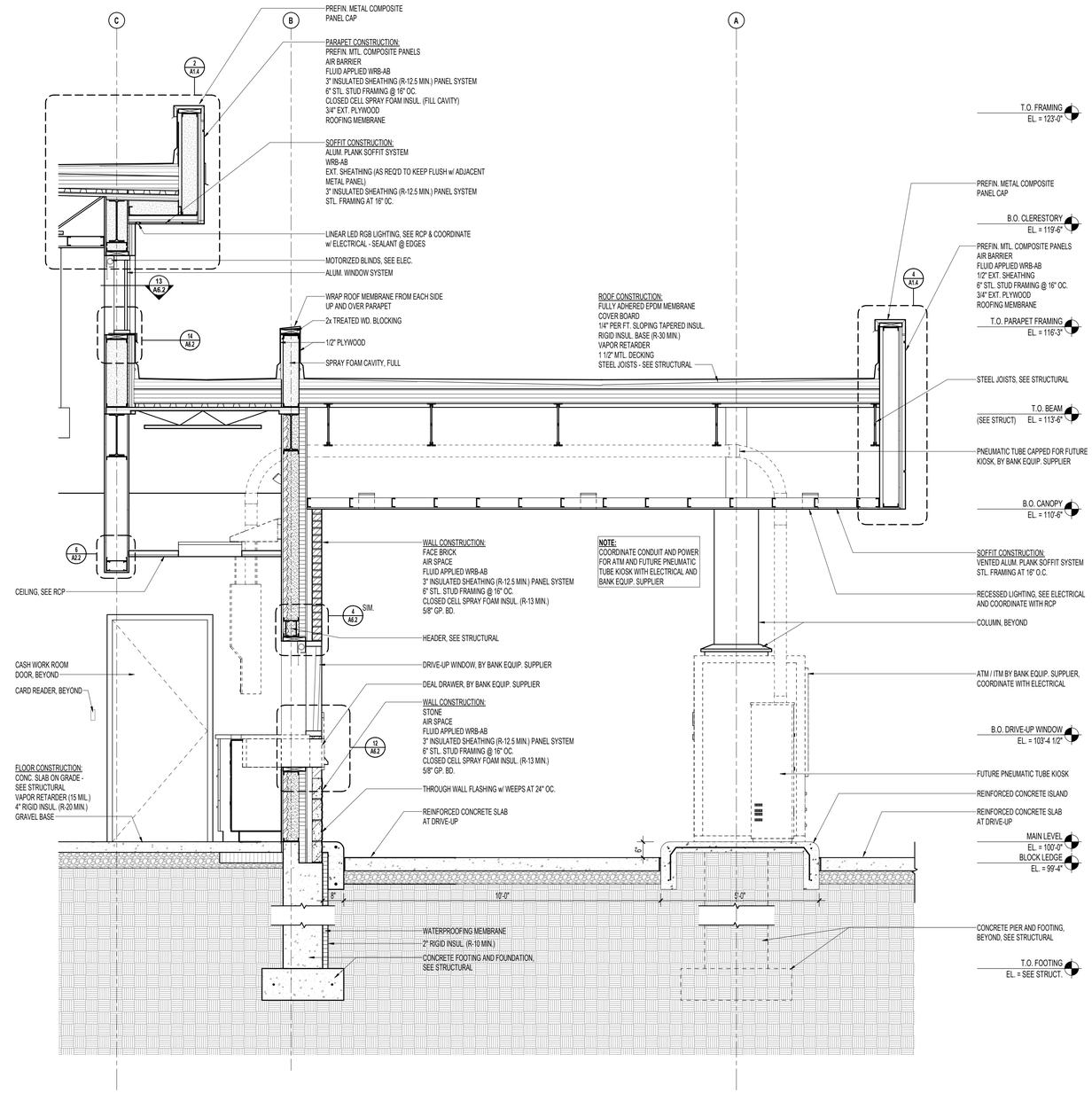

1 A5.3 **SECTION AT DRIVE-UP**
1/2" = 1'-0"

Autodesk Docs://Mayo Employees FCU-La Crosse-HKS/251167_Arch_Central_R25.rvt
3/27/2026 2:46:39 PM

HTG architects
www.htg-architects.com
Minneapolis Bismarck
1010 Mainstreet, Suite 100
Hopkins, MN 55343
Tel: 952.278.8880

PROJECT

MAYO EMPLOYEES FEDERAL CREDIT UNION

NEW BUILDING

605 WEST AVE S.
LA CROSSE, WI

BID SET	03/27/2026
REVISIONS	

DATE	NO	

WISCONSIN SEAN RABOIN 12055 HOPKINS, MN ARCHITECT

SEAN C. RABOIN
12055 03/27/2026
Reg No. Date

WALL SECTIONS

Drawn By: SRC Checked By: SCR

A5.3

251167

COPYRIGHT © HTG ARCHITECTS

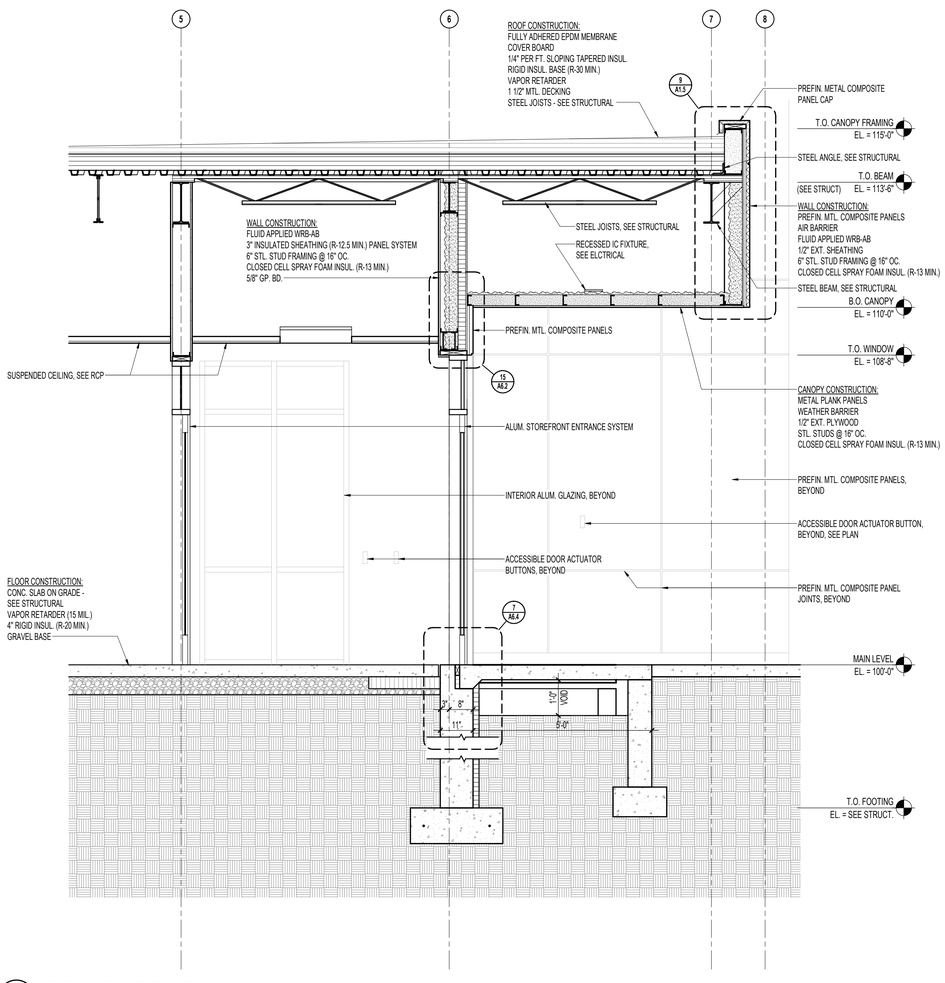

3 A5.4 **SECTION @ MAIN ENTRANCE**
1/2" = 1'-0"

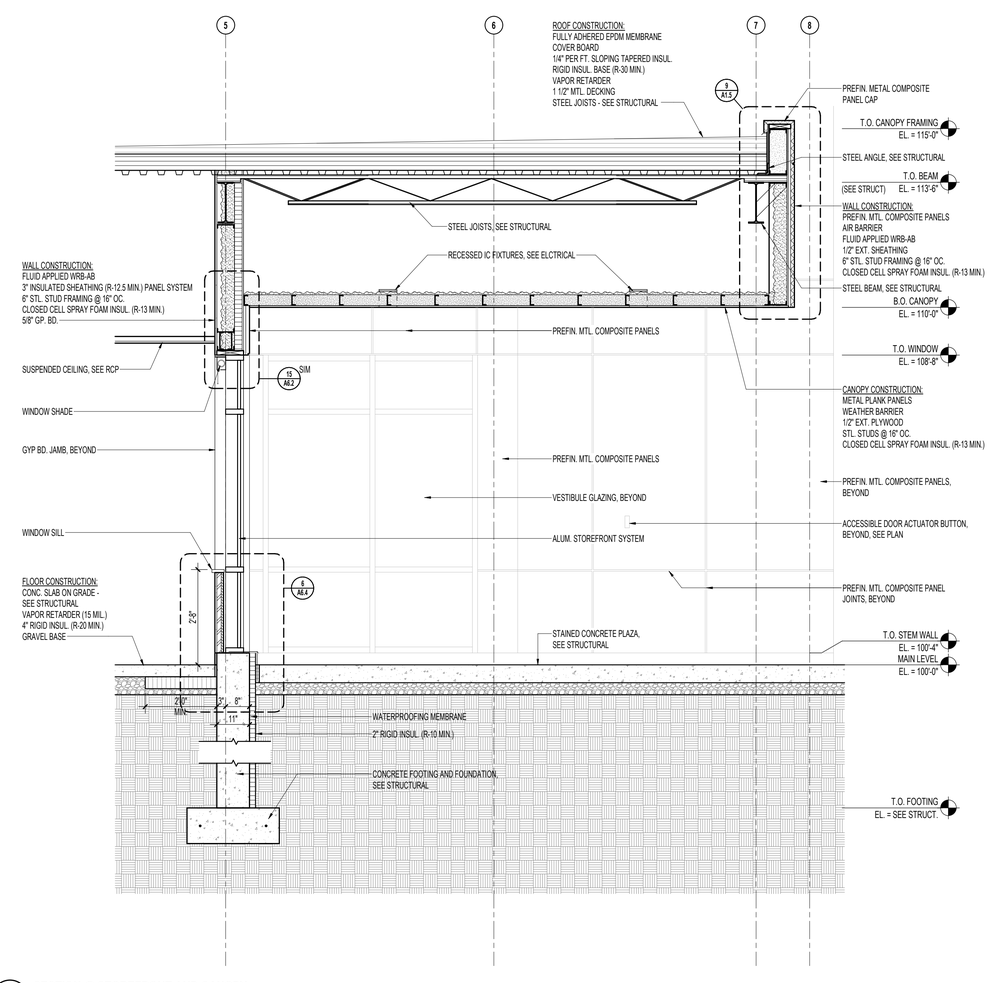

1 A5.4 **SECTION @ STOREFRONT AND CANOPY**
1/2" = 1'-0"

HTG architects

www.htg-architects.com
Minneapolis Bismarck

1010 Mainstreet, Suite 100
Hopkins, MN 55343
Tel: 952.278.8880

PROJECT

MAYO EMPLOYEES FEDERAL CREDIT UNION

NEW BUILDING

605 WEST AVE S.
LA CROSSE, WI

BID SET	03/27/2026

REVISIONS

DATE	NO	

WISCONSIN SEAN RABOIN 12055 HOPKINS MN ARCHITECT

SEAN C. RABOIN
12055 03/27/2026
Reg No. Date

WALL SECTIONS

Drawn By: SRC Checked By: SCR

A5.4

251167

COPYRIGHT © HTG ARCHITECTS

Autodesk Docs://Mayo Employees FCU-La Crosse-WI/251167_Arch_Central_R25.rvt
3/27/2026 2:46:39 PM

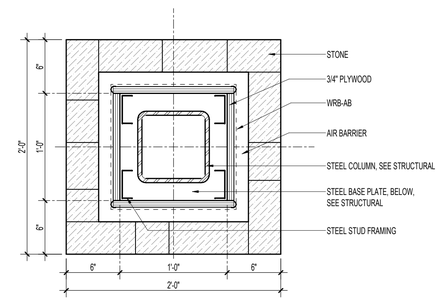

4 / A5.5 PLAN DETAIL @ COLUMN, LOW
1 1/2" = 1'-0"

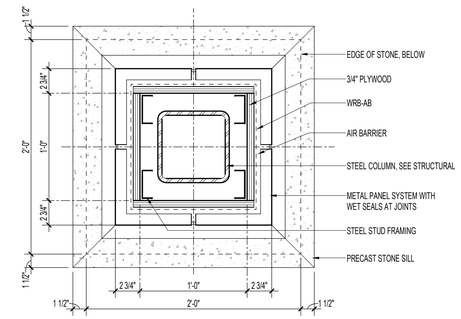

3 / A5.5 PLAN DETAIL @ COLUMN, HIGH
1 1/2" = 1'-0"

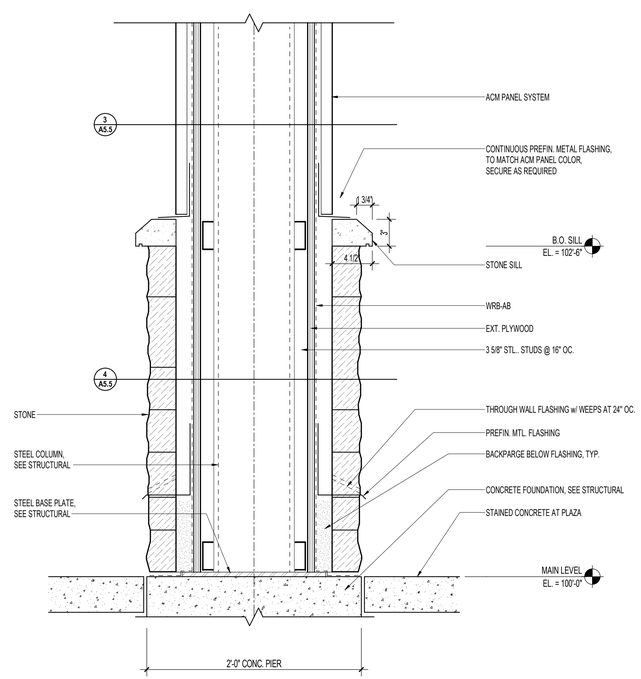

2 / A5.5 SECTION @ ENTRANCE COLUMN
1 1/2" = 1'-0"

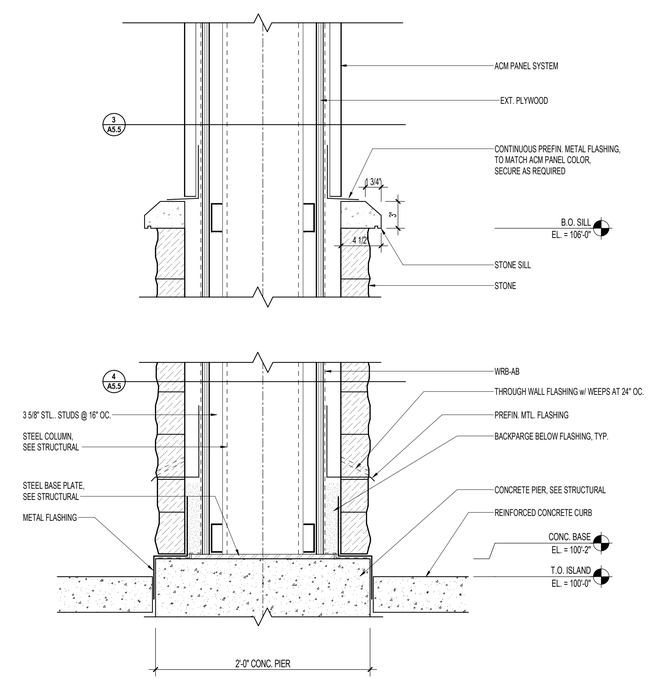

1 / A5.5 SECTION @ DRIVE-UP COLUMNS
1 1/2" = 1'-0"

Autodesk Docs://Mayo Employees FCU-La Crosse-HW251167_Arch_Central_R25.rvt
3/27/2026 2:46:52 PM

HTG architects
www.htg-architects.com
Minneapolis Bismarck
1010 Mainstreet, Suite 100
Hopkins, MN 55343
Tel: 952.278.8880

PROJECT

MAYO EMPLOYEES FEDERAL CREDIT UNION

NEW BUILDING

605 WEST AVE S.
LA CROSSE, WI

BID SET	03/27/2026

REVISIONS

DATE	NO	

WISCONSIN SEAN RABOIN 12055 HOPKINS, MN ARCHITECT

SEAN C. RABOIN
12055 — 03/27/2026
Reg No. — Date

DETAIL SECTIONS

Drawn By: SRC — Checked By: SCR

A5.5

251167

COPYRIGHT © HTG ARCHITECTS

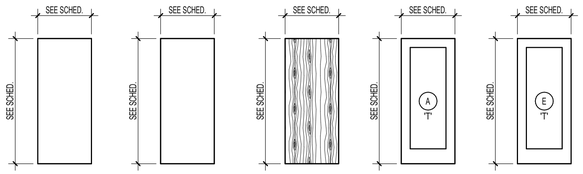

1 A6.1 DOOR ELEVATIONS
1/4" = 1'-0"

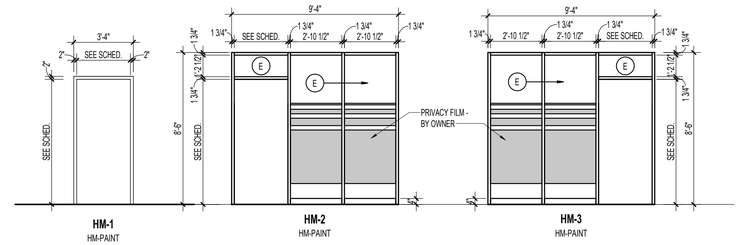

2 A6.1 HM ELEV.
1/4" = 1'-0"

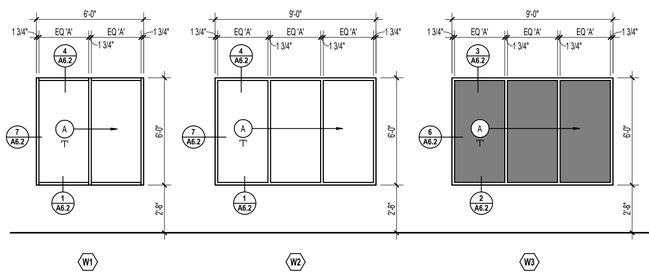

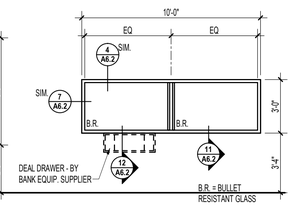

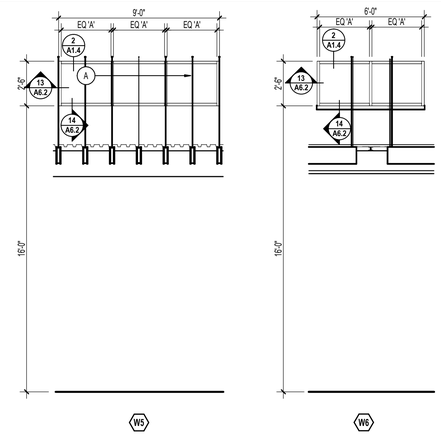

3 A6.1 ALUM WINDOW ELEVATIONS
1/4" = 1'-0"

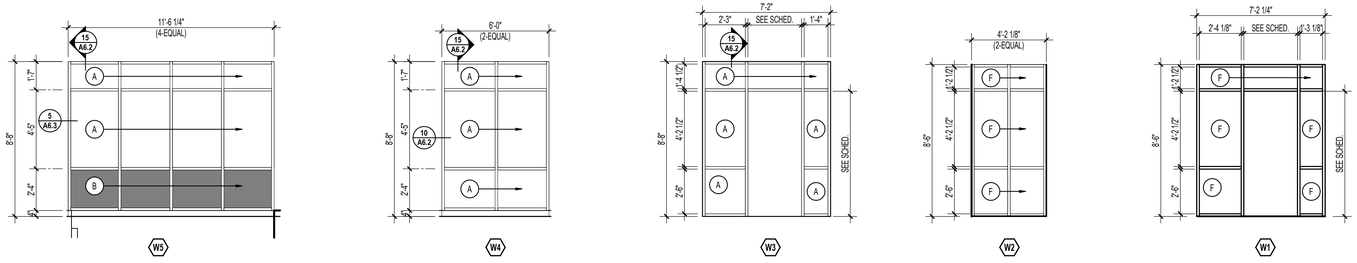

4 A6.1 ALUM. FRAME ELEVATIONS
1/4" = 1'-0"

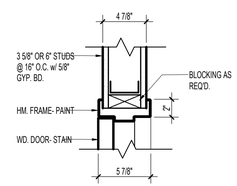

5 A6.1 HM FRAME DETAIL (JAMB SIM)
1 1/2" = 1'-0"

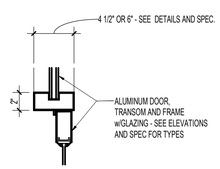

6 A6.1 ALUM. HEAD DETAIL
1 1/2" = 1'-0"

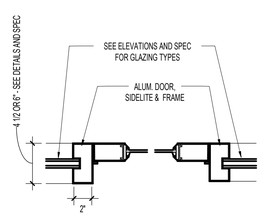

7 A6.1 ALUM. JAMB DETAIL
1 1/2" = 1'-0"

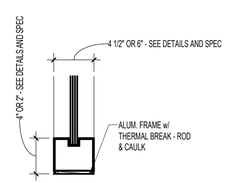

8 A6.1 ALUM. SILL DETAIL
1 1/2" = 1'-0"

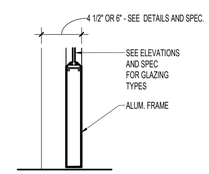

9 A6.1 ALUM. DOOR DETAIL
1 1/2" = 1'-0"

FRAMES

FRAME PREFIXES

AL-	ALUMINUM
BD-	BARN DOOR
EXTG-	EXISTING
HMM-	HOLLOW METAL MASONRY
HMP-	HOLLOW METAL POCKET
HM-	HOLLOW METAL
WD-	WOOD
WDP-	WOOD POCKET

TRACK PREFIXES

HL	HIGH LIFT
IL	INCLINED LIFT
STD	STANDARD LIFT
VL	VERTICAL LIFT

FRAME SUBSCRIPT

a	VARIATION - SEE FRAME TYPE ELEVATIONS
b	VARIATION - SEE FRAME TYPE ELEVATIONS
c	VARIATION - SEE FRAME TYPE ELEVATIONS

HM-4a

FRAME SUFFIXES

0	FRAMED OPENING
1	DOOR WITH FRAME
2	DOUBLE DOOR WITH FRAME
3	SIDELIGHT(S) 1 SIDE
4	SIDELIGHT(S) 1 SIDE WITH HORIZONTAL(S)
5	SIDELIGHT(S) BOTH SIDES
6	SIDELIGHT(S) BOTH SIDES WITH HORIZONTAL(S)
7	DOUBLE DOOR WITH SIDELIGHT(S) BOTH SIDES
8	DOUBLE DOOR SIDELIGHT(S) BOTH SIDES WITH HORIZONTAL(S)
T1	DOOR WITH TRANSOM
T2	DOUBLE DOOR WITH TRANSOM
T3	DOOR WITH TRANSOM WITH SIDELIGHT(S) 1 SIDE
T4	TRANSOM WITH SIDELIGHT(S) 1 SIDE WITH HORIZONTAL(S)
T5	TRANSOM WITH SIDELIGHT(S) BOTH SIDES
T6	TRANSOM WITH SIDELIGHT(S) BOTH SIDES WITH HORIZONTAL(S)
T7	DOUBLE DOOR WITH TRANSOM W. SIDELIGHT(S) BOTH SIDES
T8	DOUBLE DOOR WITH TRANSOM W. SIDELIGHT(S) BOTH SIDES WITH HORIZONTAL(S)

*ACTUAL FRAMES MAY VARY FROM DESCRIPTION ABOVE - REFER TO FRAME TYPE ELEVATIONS

DOOR PANEL

PANEL PREFIXES

AL-	ALUMINUM
CS-	COILING SLATS
EXTG-	EXISTING
FSY-	FURNITURE SYSTEM
GP-	GLASS PARTITION
HM-	HOLLOW METAL
OS-	OVERHEAD SECTIONAL
WD-	WOOD

FRAME SUBSCRIPT

e	EXTERIOR
i	INTERIOR

WD-FGe

PANEL SUFFIXES

AG	ALL GLASS
AD	AUTOMATIC SLIDING DOORS
BI	BIFOLD
F	FLUSH
FG	FULL GLASS
G2	GLASS 2 LITE
HG	HALF GLASS
L	LOUVER
N	NARROW LITE
S1	INSULATED STEEL
S2	NON-INSULATED STEEL
SD	SLIDING DOOR
V	VISION LITE

*ACTUAL PANELS MAY VARY FROM DESCRIPTION ABOVE - REFER TO DOOR TYPE ELEVATIONS

A GLAZING SCHEDULE

'T' INDICATES TEMPERED GLASS., (TYPE IG-S)
(/) INDICATES A COMBINATION OF GLAZING TYPES IN A FRAME AND/OR WINDOW

NO.	GLAZING TYPE DESCRIPTION	GLAZING SPEC
A	EXTERIOR GLAZING: 1" TEMPERED GLAZING	TYPE IG-1
B	EXTERIOR GLAZING: 1" TEMPERED SPANDREL GLAZING	TYPE IG-3
E	INTERIOR GLAZING: 1/4"	TYPE G-3
F	INTERIOR GLAZING: 3/8"	TYPE G-3

HTG architects
www.htg-architects.com
Minneapolis Bismarck
1010 Mainstreet, Suite 100
Hopkins, MN 55343
Tel: 952.278.8880

PROJECT

MAYO EMPLOYEES FEDERAL CREDIT UNION

NEW BUILDING

605 WEST AVE S.
LA CROSSE, WI

BID SET		03/27/2026
REVISIONS		
DATE	NO	

WISCONSIN SEAN RABOIN 12055 HOPKINS, MN ARCHITECT

SEAN C. RABOIN
12055 03/27/2026
Reg No. Date

DOOR/ WINDOW FRAME ELEVATIONS AND DETAILS

Drawn By: SRC Checked By: SCR

A6.1

251167

COPYRIGHT © HTG ARCHITECTS

Autodesk Docs://Mayo Employees FCU-La Crosse-WI/251167_Arch_Central_R25.rvt
3/27/2026 2:46:39 PM

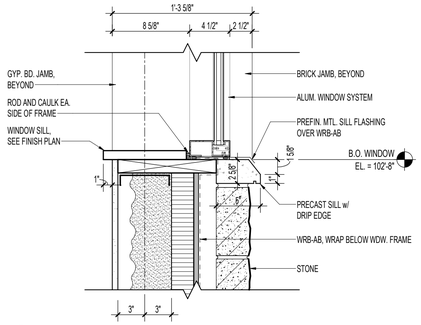

1 A6.2 **SILL DETAIL @ STONE**
1 1/2" = 1'-0"

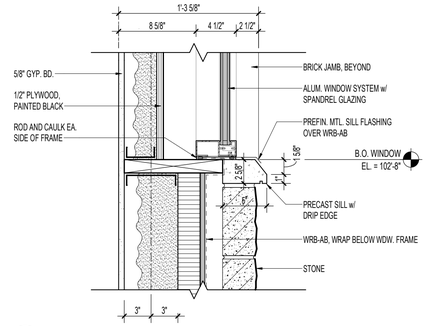

2 A6.2 **SILL DETAIL @ SPANDREL**
1 1/2" = 1'-0"

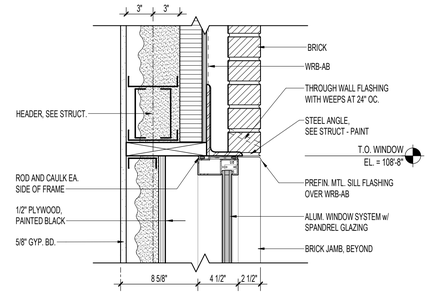

3 A6.2 **HEAD DETAIL @ SPANDREL**
1 1/2" = 1'-0"

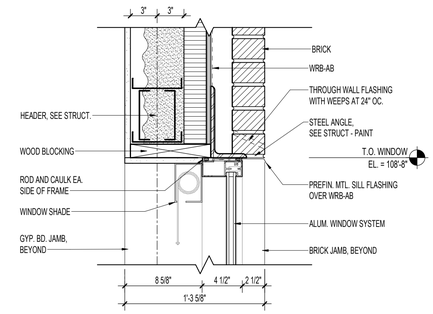

4 A6.2 **HEAD DETAIL @ BRICK**
1 1/2" = 1'-0"

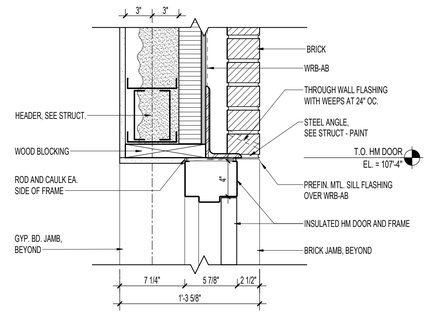

5 A6.2 **HM DOOR DETAIL @ BRICK**
1 1/2" = 1'-0"

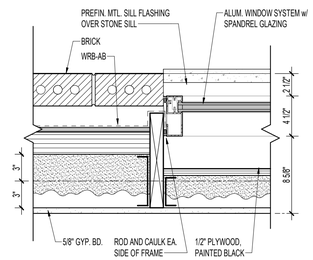

6 A6.2 **JAMB DETAIL @ SPANDREL**
1 1/2" = 1'-0"

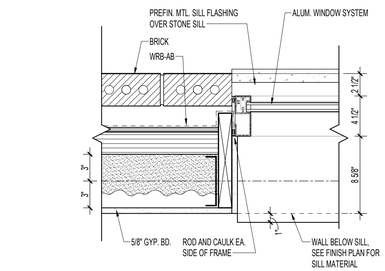

7 A6.2 **JAMB DETAIL @ BRICK**
1 1/2" = 1'-0"

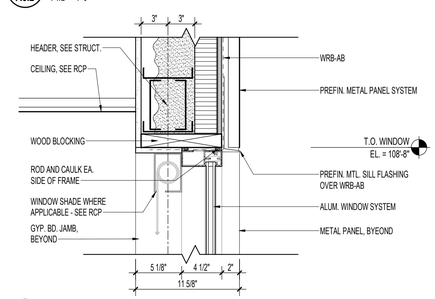

8 A6.2 **HEAD DETAIL @ METAL PANEL**
1 1/2" = 1'-0"

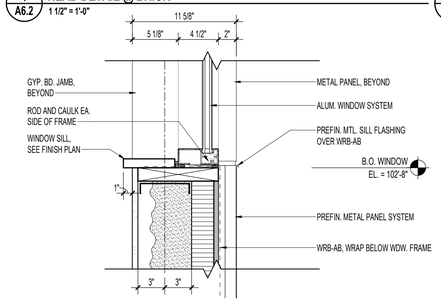

9 A6.2 **SILL DETAIL @ METAL PANEL**
1 1/2" = 1'-0"

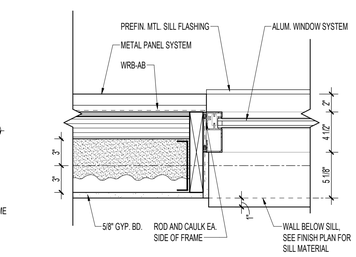

10 A6.2 **JAMB DETAIL @ METAL PANEL**
1 1/2" = 1'-0"

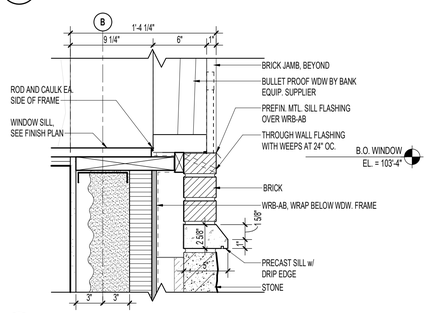

11 A6.2 **DRIVE-UP ALUM. SILL DETAIL**
1 1/2" = 1'-0"

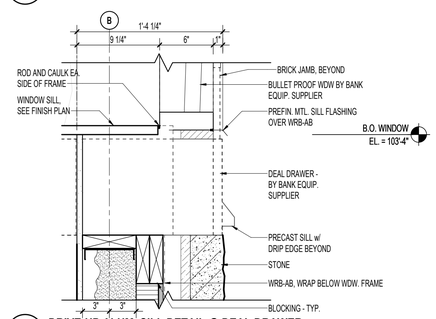

12 A6.2 **DRIVE-UP ALUM. SILL DETAIL @ DEAL DRAWER**
1 1/2" = 1'-0"

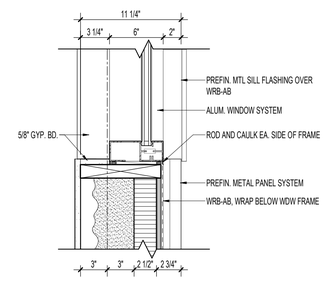

13 A6.2 **JAMB DETAIL @ CLERESTORY METAL PANEL**
1 1/2" = 1'-0"

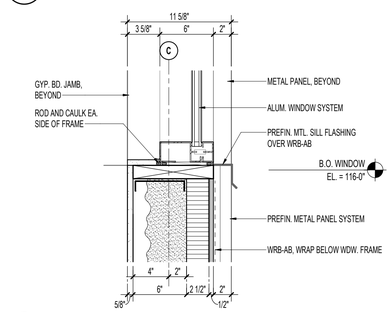

14 A6.2 **SILL DETAIL @ CLERESTORY METAL PANEL**
1 1/2" = 1'-0"

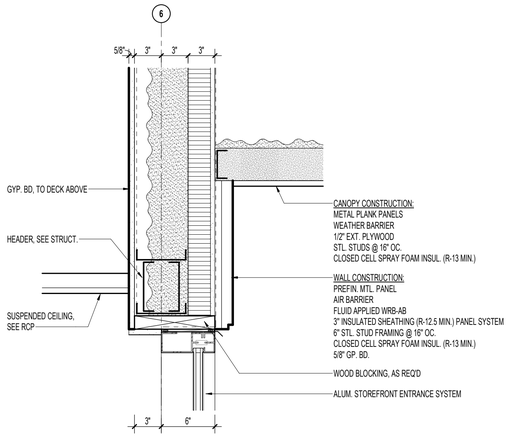

15 A6.2 **HEAD DETAIL @ STOREFRONT**
1 1/2" = 1'-0"

Autodesk Docs://Mayo Employees FCU-La Crosse-W/251167_Arch_Central_R25.rvt
3/27/2026 2:56:39 PM

HTG architects
www.htg-architects.com
Minneapolis Bismarck
1010 Mainstreet, Suite 100
Hopkins, MN 55343
Tel: 952.278.8880

PROJECT

MAYO EMPLOYEES FEDERAL CREDIT UNION

NEW BUILDING

605 WEST AVE S.
LA CROSSE, WI

BID SET	03/27/2026

REVISIONS

DATE	NO	

WISCONSIN SEAN RABOIN 12055 HOPKINS MN ARCHITECT

SEAN C. RABOIN
12055 03/27/2026
Reg No. Date

DOOR AND WINDOW FRAME DETAILS

Drawn By: SRC Checked By: SCR

A6.2

251167

COPYRIGHT © HTG ARCHITECTS

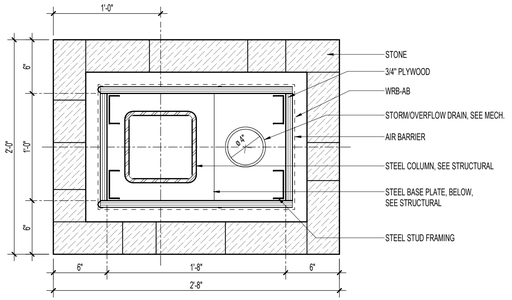

1 A6.3 **PLAN DETAIL @ DRIVE-UP COLUMN**
1 1/2" = 1'-0"

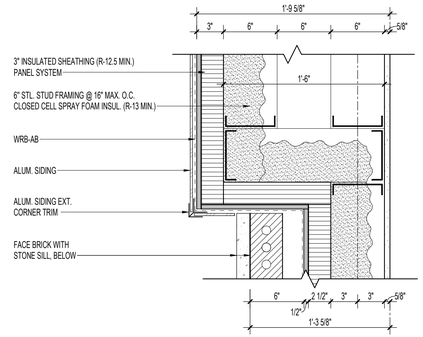

2 A6.3 **PLAN DETAIL @ ALUM. SIDING BUMP-OUT**
1 1/2" = 1'-0"

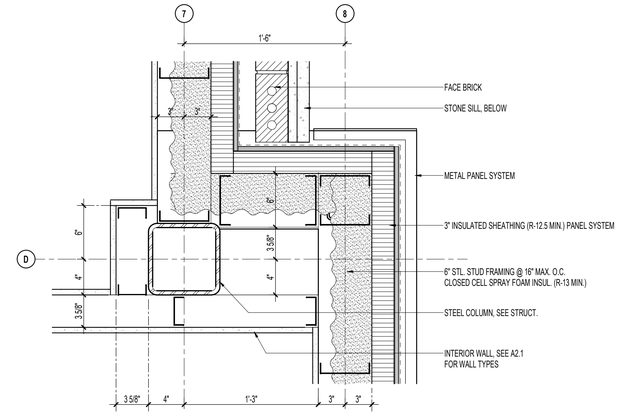

3 A6.3 **PLAN DETAIL @ BRICK / METAL PANEL**
1 1/2" = 1'-0"

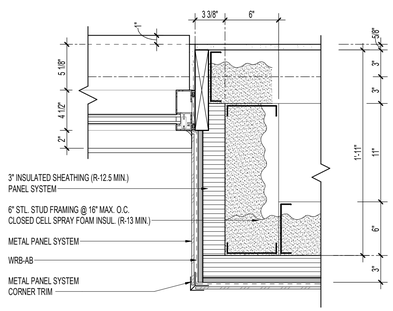

4 A6.3 **JAMB DETAIL @ SIGNAGE WALL**
1 1/2" = 1'-0"

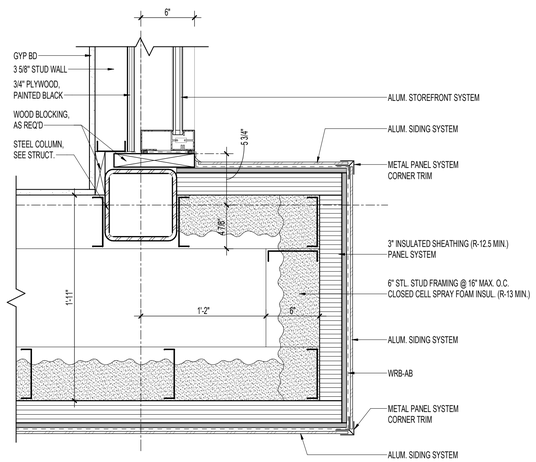

5 A6.3 **PLAN DETAIL @ SIGNAGE WALL**
1 1/2" = 1'-0"

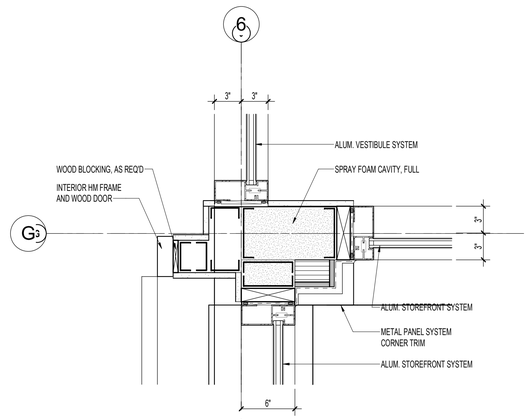

6 A6.3 **PLAN DETAIL @ VESTIBULE CORNER**
1 1/2" = 1'-0"

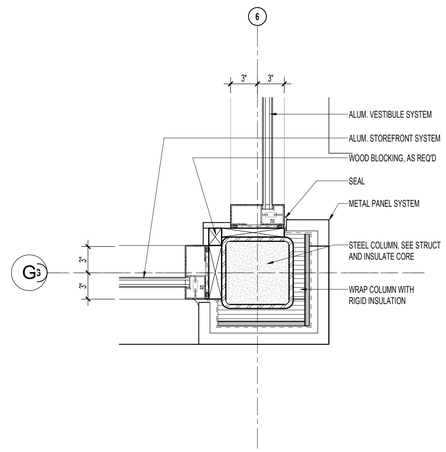

7 A6.3 **PLAN DETAIL @ VESTIBULE EXT. CORNER**
1 1/2" = 1'-0"

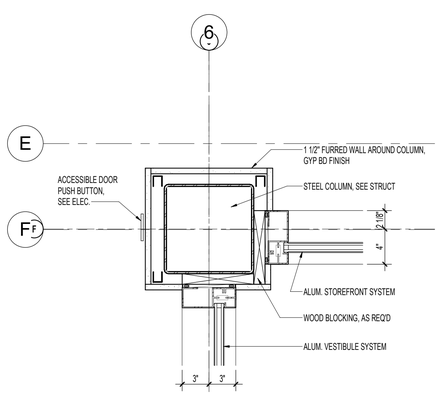

8 A6.3 **PLAN DETAIL @ COLUMN**
1 1/2" = 1'-0"

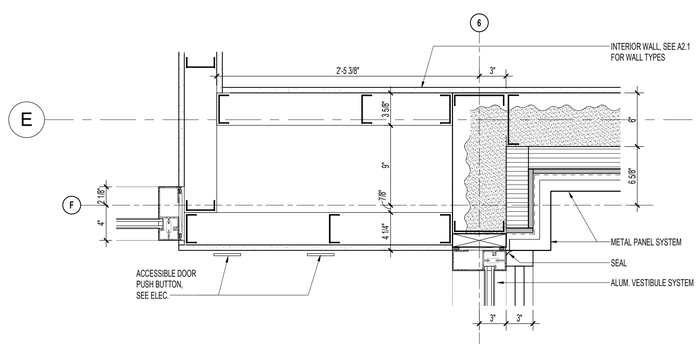

9 A6.3 **PLAN DETAIL @ VESTIBULE CHASE**
1 1/2" = 1'-0"

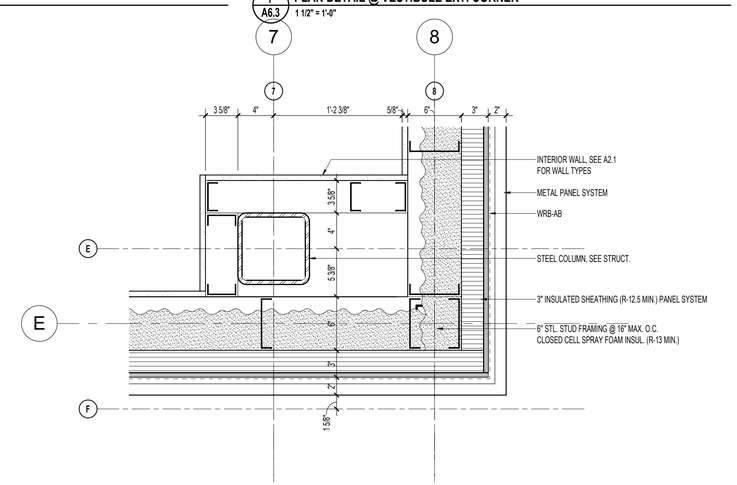

10 A6.3 **PLAN DETAIL @ INT. COLUMN**
1 1/2" = 1'-0"

HTG architects

www.htg-architects.com
Minneapolis Bismarck

1010 Mainstreet, Suite 100
Hopkins, MN 55343
Tel: 952.278.8880

PROJECT

MAYO EMPLOYEES FEDERAL CREDIT UNION

NEW BUILDING

605 WEST AVE S.
LA CROSSE, WI

BID SET	03/27/2026
REVISIONS	

DATE	NO	

WISCONSIN SEAN RABOIN 12055 HOPKINS, MN ARCHITECT

SEAN C. RABOIN
12055 03/27/2026
Reg No. Date

DOOR, WINDOW, AND PLAN DETAILS

Drawn By: SRC Checked By: SCR

A6.3

251167

COPYRIGHT © HTG ARCHITECTS

Autodesk Docs:Mayo Employees FCU-La Crosse-W025/167_Arch_Central_R25.rvt
3/27/2026 2:46:43 PM

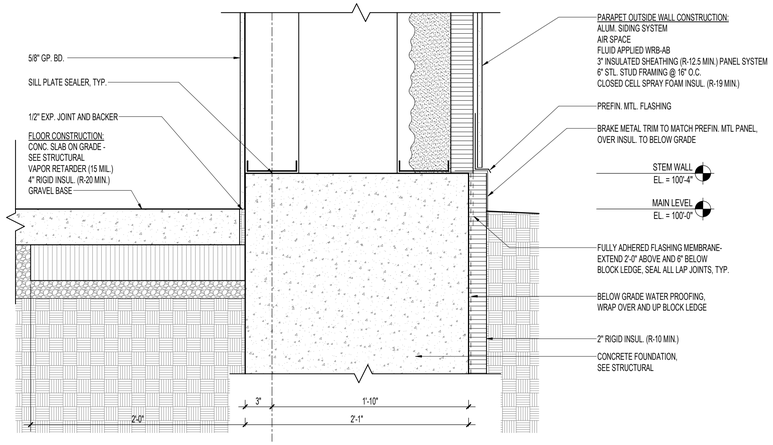

1 A6.4 **BASE DETAIL @ ACCENT WALL, SOUTH**
1 1/2" = 1'-0"

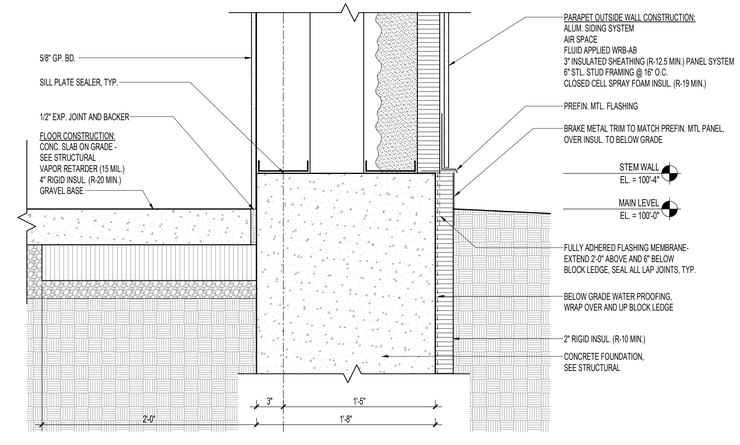

2 A6.4 **BASE DETAIL @ ACCENT WALL, WEST**
1 1/2" = 1'-0"

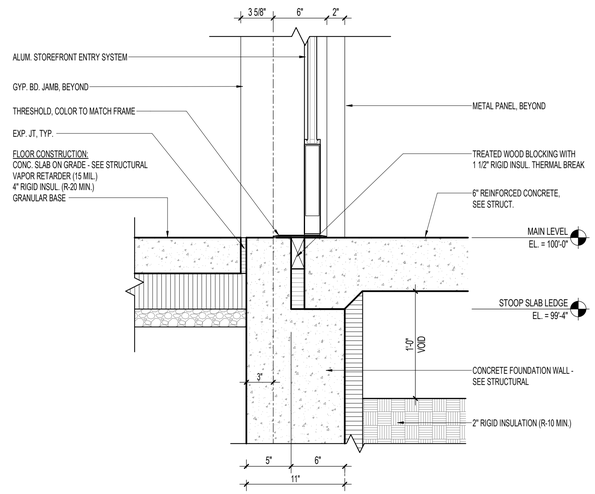

7 A6.4 **BASE DETAIL @ ENTRY**
1 1/2" = 1'-0"

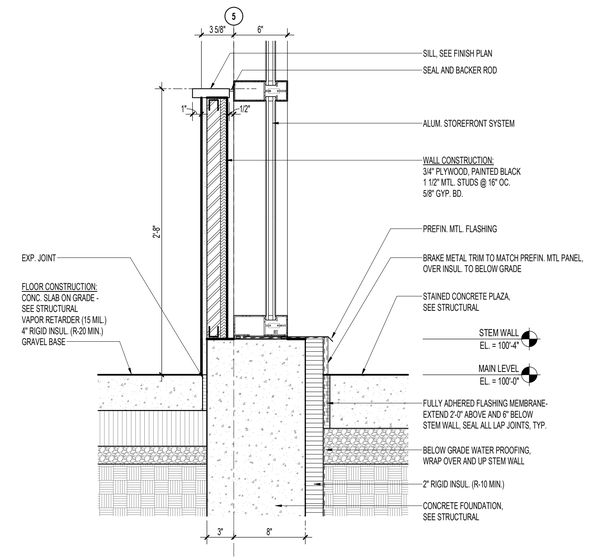

6 A6.4 **BASE DETAIL @ STOREFRONT SYSTEM**
1 1/2" = 1'-0"

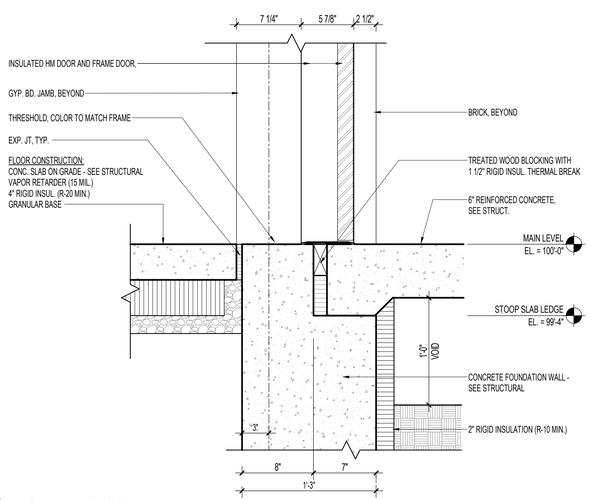

3 A6.4 **BASE DETAIL @ STOOP**
1 1/2" = 1'-0"

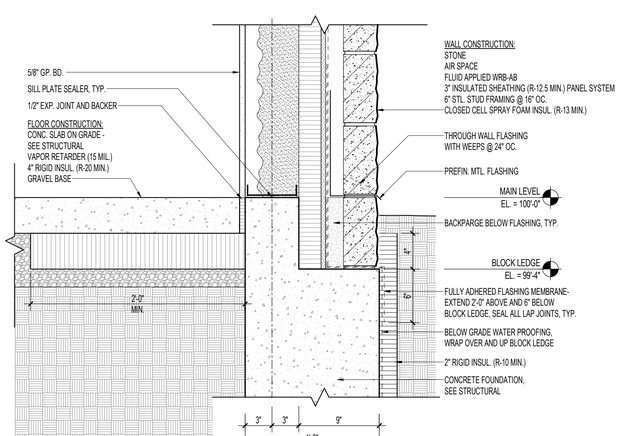

4 A6.4 **BASE DETAIL @ STONE**
1 1/2" = 1'-0"

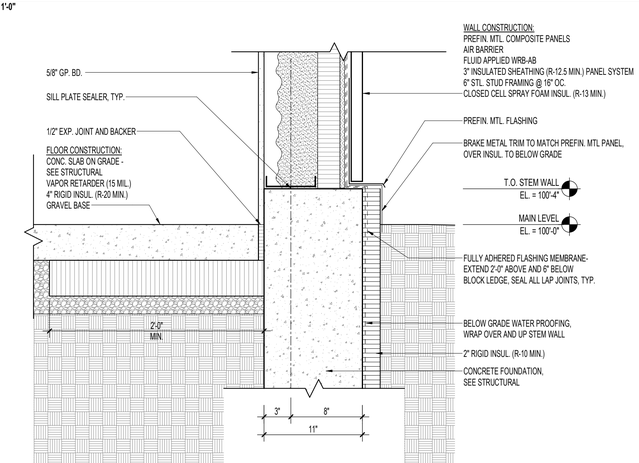

5 A6.4 **BASE DETAIL @ PREFIN. METAL PANEL**
1 1/2" = 1'-0"

HTG architects

www.htg-architects.com
Minneapolis Bismarck

1010 Mainstreet, Suite 100
Hopkins, MN 55343
Tel: 952.278.8880

PROJECT

MAYO EMPLOYEES FEDERAL CREDIT UNION

NEW BUILDING

605 WEST AVE S.
LA CROSSE, WI

BID SET	03/27/2026

REVISIONS

DATE	NO	

WISCONSIN SEAN RABOIN 12055 HOPKINS, MN ARCHITECT

SEAN C. RABOIN
12055 03/27/2026
Reg No. Date

DOOR, WINDOW, AND WALL BASE DETAILS

Drawn By: SRC Checked By: SCR

A6.4

251167

COPYRIGHT © HTG ARCHITECTS

Autodesk Docs://Mayo Employees FCU-La Crosse-WI/251167_Arch_Central_R25.rvt
3/27/2026 2:46:53 PM

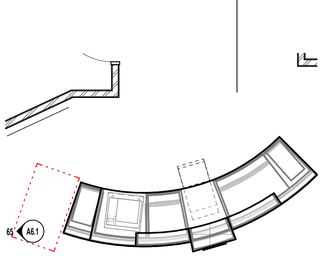

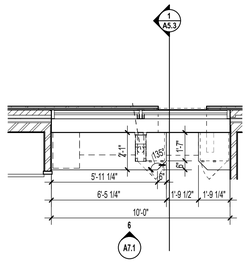

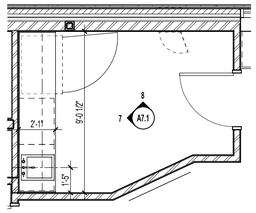

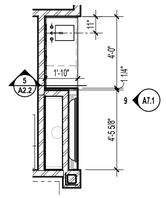

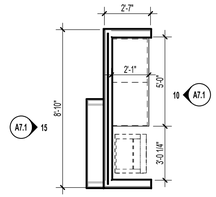

1 A7.1 ENLARGED TELLER LINE
1/4" = 1'-0"

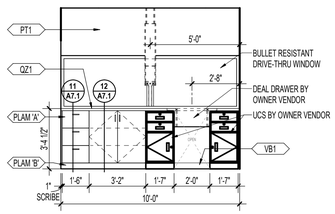

2 A7.1 ENLARGED DRIVE-UP TELLER
1/4" = 1'-0"

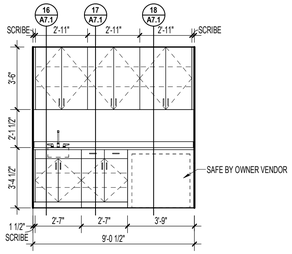

3 A7.1 ENLARGED CASH WORK ROOM
1/4" = 1'-0"

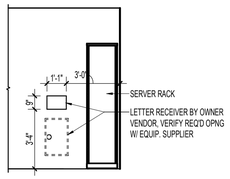

4 A7.1 ENLARGED COFFEE BAR
1/4" = 1'-0"

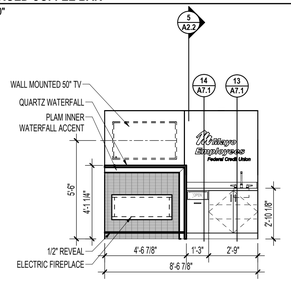

5 A7.1 ENLARGED WORK COPY
1/4" = 1'-0"

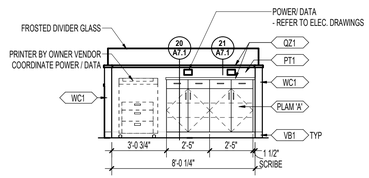

6 A7.1 DRIVE-UP TELLER
1/4" = 1'-0"

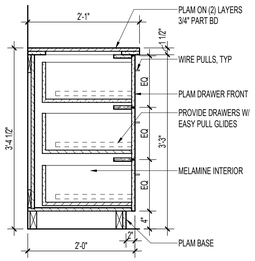

7 A7.1 CASH WORK - MILLWORK
1/4" = 1'-0"

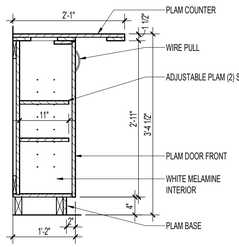

8 A7.1 CASH WORK - PACKAGE PASSER
1/4" = 1'-0"

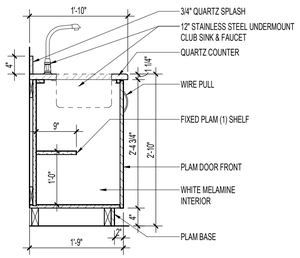

9 A7.1 COFFEE BAR
1/4" = 1'-0"

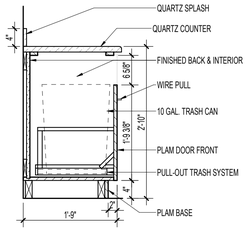

10 A7.1 WORK COPY
1/4" = 1'-0"

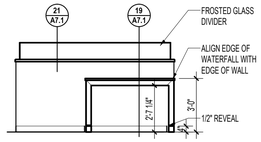

11 A7.1 3-EQUAL DRAWERS BASE CABINET - 40.5" X 25"
3/4" = 1'-0"

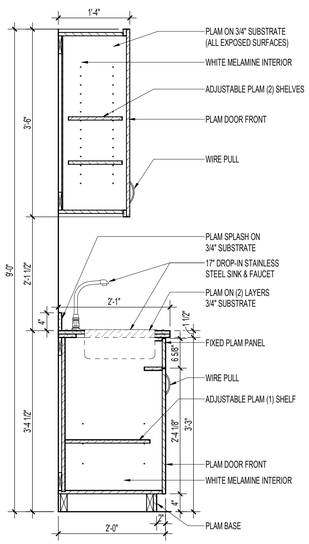

12 A7.1 BASE CABINET @ DRIVE-UP TELLER - 40.5" X 15"
3/4" = 1'-0"

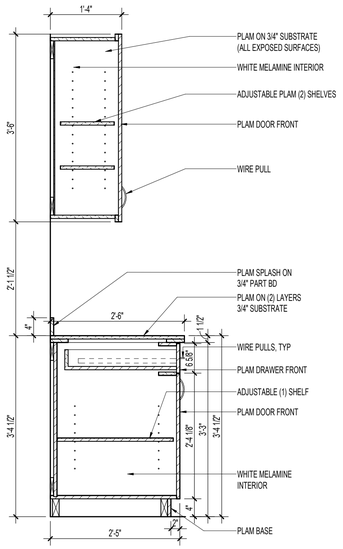

13 A7.1 BASE CABINET @ COFFEE BAR - 34" X 22"
3/4" = 1'-0"

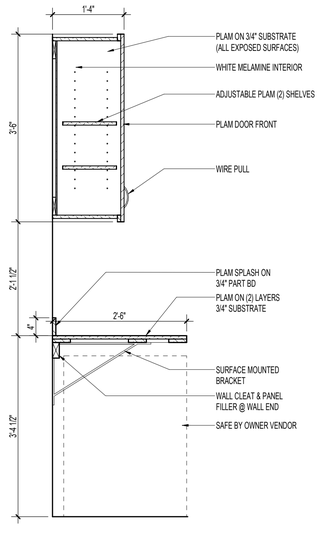

14 A7.1 TRASH PULL OUT BASE CABINET @ COFFEE BAR - 34" X 22"
3/4" = 1'-0"

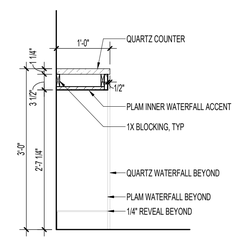

19 A7.1 CHECK COUNTER - 36" X 12"
3/4" = 1'-0"

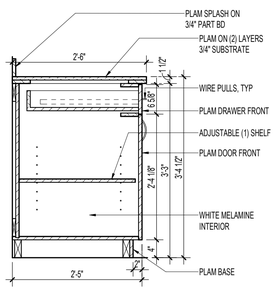

15 A7.1 CHECK COUNTER
1/4" = 1'-0"

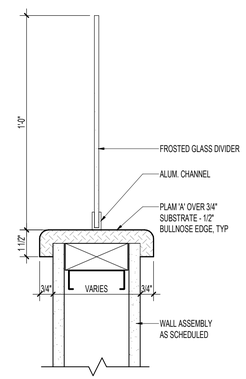

16 A7.1 SINK BASE CABINET W/ UPPER 40.5" X 25"
3/4" = 1'-0"

17 A7.1 1-DRAWER BASE CABINET W/ UPPER & SPLASH - 40.5" X 25"
3/4" = 1'-0"

18 A7.1 COUNTER W/ UPPER & SPLASH - 40.5" X 25"
3/4" = 1'-0"

20 A7.1 1-DRAWER BASE CABINET W/ SPLASH - 40.5" X 30"
3/4" = 1'-0"

21 A7.1 WALL CAP - PLAM
3" = 1'-0"

HTG architects

www.htg-architects.com
Minneapolis Bismarck

1010 Mainstreet, Suite 100
Hopkins, MN 55343
Tel: 952.278.8880

PROJECT

MAYO EMPLOYEES FEDERAL CREDIT UNION

NEW BUILDING

605 WEST AVE S.
LA CROSSE, WI

BID SET	03/27/2026
REVISIONS	
DATE	NO

WISCONSIN SEAN RABOIN 12055 HOPKINS, MN ARCHITECT

SEAN C. RABOIN
12055 03/27/2026
Reg No. Date

MILLWORK ELEVATIONS AND DETAILS

Drawn By: Author Checked By: Checker

A7.1

251167

COPYRIGHT © HTG ARCHITECTS

Autodesk Docs:/Mayo Employees FCU La Crosse-INV251167_Arch_Central_R25.rvt
3/27/2026 2:46:47 PM

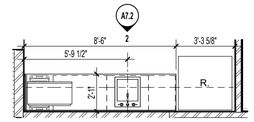

1 A7.2 **ENLARGED LOUNGE**
1/4" = 1'-0"

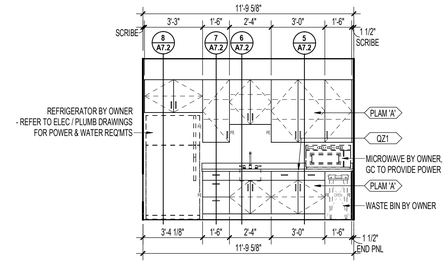

2 A7.2 **LOUNGE**
1/4" = 1'-0"

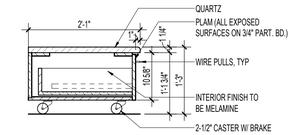

9 A7.2 **PRINTER CART - 1 DRAWER**
3/4" = 1'-0"

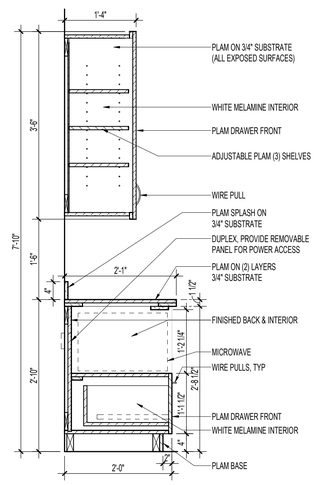

3 A7.2 **MICROWAVE BASE CABINET W/ UPPER - 34" X 25"**
3/4" = 1'-0"

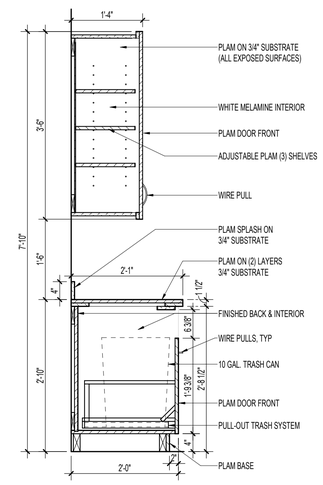

4 A7.2 **TRASH PULL OUT BASE CABINET W/ UPPER - 34" X 25"**
3/4" = 1'-0"

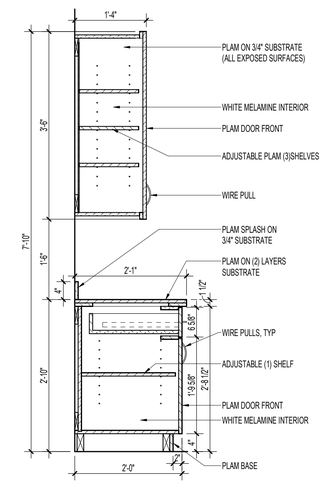

5 A7.2 **1-DRAWER BASE CABINET W/ UPPER - 34" X 25"**
3/4" = 1'-0"

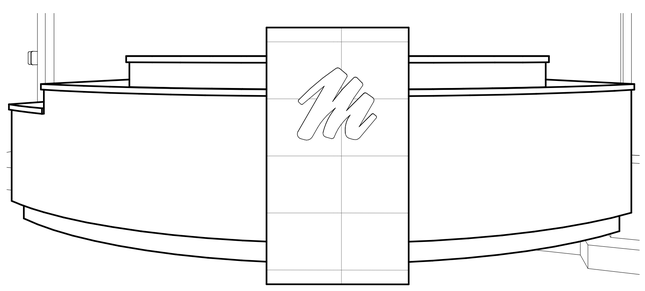

14 A7.2 **TELLER**

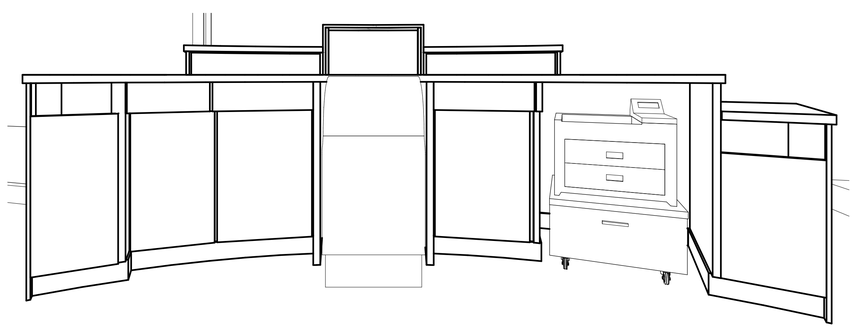

15 A7.2 **TELLER**

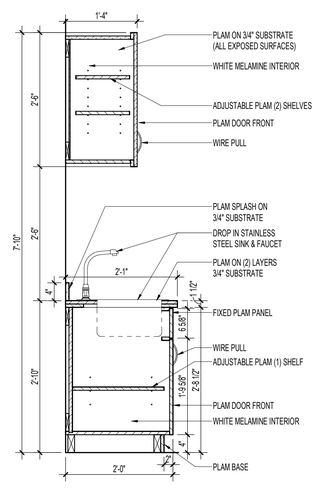

6 A7.2 **SINK BASE CABINET W/ UPPER - 34" X 25"**
3/4" = 1'-0"

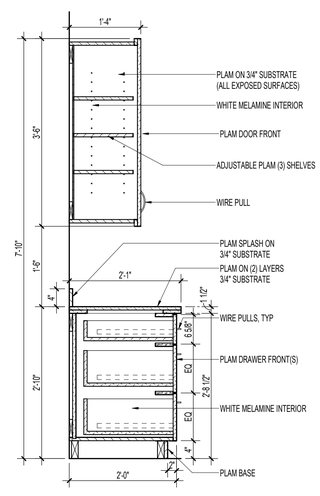

7 A7.2 **3-DRAWER BASE CABINET W/ UPPER - 34" X 25"**
3/4" = 1'-0"

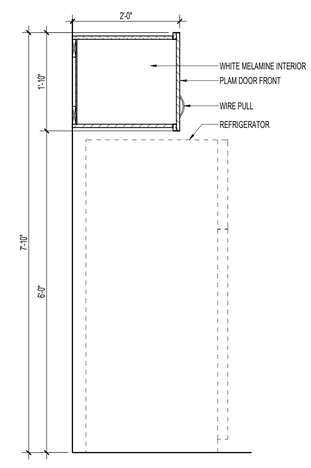

8 A7.2 **REFRIGERATOR UPPER CABINET**
3/4" = 1'-0"

HTG architects
www.htg-architects.com
Minneapolis Bismarck
1010 Mainstreet, Suite 100
Hopkins, MN 55343
Tel: 952.278.8880

PROJECT

MAYO EMPLOYEES FEDERAL CREDIT UNION

NEW BUILDING

605 WEST AVE S.
LA CROSSE, WI

BID SET	03/27/2026
REVISIONS	
DATE	NO

WISCONSIN SEAN RABOIN 12055 HOPKINS MN ARCHITECT

SEAN C. RABOIN
12055 03/27/2026
Reg No. Date

MILLWORK ELEVATIONS AND DETAILS

Drawn By: Author Checked By: Checker

A7.2

251167

COPYRIGHT © HTG ARCHITECTS

Autodesk Docs://Mayo Employees FCU-La Crosse-W05251167_Arch_Central_R25.rvt
3/27/2026 2:46:49 PM

A2.09 FINISH SPECIFICATIONS:

SYMBOL	PRODUCT DESCRIPTION	MANUFACTURER	STYLE	COLOR	FINISH	SIZE	SPECIFICATIONS	REMARKS
TILE								
TL1	PORCELAIN FLOOR TILE	CERAMIC TILEWORKS	QUARTZITE	GREY		12" X 24"	PATTERN: 1/3 OFFSET GROUT: TBD	LOCATION: LOBBY, TOILET ROOMS CONTACT: KRISTA GARDNER @ CERAMIC TILEWORKS
TL2	CERAMIC WALL TILE	CERAMIC TILEWORKS	BUILDER BASIC	WHITE ICE	MATTE	4" X 16"	PATTERN: 1/2 OFFSET GROUT: TBD	LOCATION: TOILET ROOMS CONTACT: KRISTA GARDNER @ CERAMIC TILEWORKS
TL3	PORCELAIN WALL TILE	TILE BAR	KAI	ROYAL BLUE	CRACKLED GLOSSY	4" TRI-STACKED MOSAIC	PATTERN: VERTICAL; ENSURE SHEET JOINT WIDTH MATCHES TILE GROUT WIDTH FOR SEAMLESS LOOK GROUT: TBD	LOCATION: COFFEE BAR, TOILET ROOMS CONTACT: DENA TISOR @ TILE BAR
CARPET								
CPT1	CARPET TILE	MILLIKEN	HEAVY META | ALLOY	ALY152-118 | ZINC		25CM X 100CM	PATTERN: BRICK ASHLAR	LOCATION: LOBBY, TELLER, CASH-WORK, WORK-COPY, CONFERENCE, OFFICE, WELLNESS: STORAGE CONTACT: CARI KAPSNER @ MILLIKEN
CPT2	CARPET TILE	MILLIKEN	RELEVATION | WANDER	PWY52 | SAIL		50CM X 100CM	PATTERN: BRICK ASHLAR	LOCATION: WAITING AREA CONTACT: CARI KAPSNER @ MILLIKEN
CPT3	CARPET TILE - WALK OFF	MILLIKEN	OBEX | CUT / STIPPLE	STC119 | DARK GREY		50CM X 50CM	PATTERN: QUARTER TURN	LOCATION: VESTIBULE, EMPLOYEE ENTRANCE, CLOSET CONTACT: CARI KAPSNER @ MILLIKEN
SEALED CONCRETE								
SC1		TBD	TBD	TBD				
BASE								
VB1	VINYL BASE	FLEXCO	COVED	78 | UMBER		4" HIGH		LOCATION: TYPICAL WALL BASE CONTACT: TBD
PAINT								
PT1	PAINT	SHERWIN WILLIAMS	6070	HERON PLUME	EGGSHELL			LOCATION: TYPICAL
PT2	PAINT	SHERWIN WILLIAMS	9150	ENDLESS SEA	EGGSHELL			LOCATION: ACCENT
PT3	PAINT	SHERWIN WILLIAMS	7069	IRON ORE	SATIN			LOCATION: HM DOORS, HM FRAMES, RAILINGS
PT4	PAINT	SHERWIN WILLIAMS	7007	CEILING BRIGHT WHITE	SATIN			LOCATION: TOILET ROOMS, UTILITY ROOM
PT5	PAINT	SHERWIN WILLIAMS	7007	CEILING BRIGHT WHITE	FLAT			LOCATION: GYP BD CEILINGS, SOFFITS, BULKHEADS, EXPOSED STRUCTURE
WALL COVERING								
WC1	WALL COVERING	MDC	BEAD BARE | BBBB06	NAVY NIBBLET				LOCATION: WAITING CONTACT: JESSIE SYDNES @ MDC
PLASTIC LAMINATE								
PLAM 'A'	PLASTIC LAMINATE	WILSONART	7971-12	UPTOWN WALNUT	SOFTGRAIN		INSTALLATION: VERTICAL GRAIN	LOCATION: TYPICAL MILLWORK CONTACT: LYNETTE STENDE @ WILSONART
PLAM 'B'	PLASTIC LAMINATE	WILSONART	4945-38	ORGANIC COTTON	FINE VELVET			LOCATION: COUNTERTOPS WHERE NOTED ON ELEVATIONS/DETAILS CONTACT: LYNETTE STENDE @ WILSONART
PLAM 'C'	PLASTIC LAMINATE	ARBORITE	S577	GRAPHITE	CA			LOCATION: TYPICAL MILLWORK BASE CONTACT: RANDY BECKSTROM @ JAECKLE DISTRIBUTORS
QUARTZ SURFACE								
QZ1	QUARTZ SURFACE	CAMBRIA	LUXURY SERIES	HARLOW	MATTE		EDGE PROFILE: RIDGELINE (TR3)	LOCATION: TELLER LINE, COFFEE BAR, CHECK DESK, FIREPLACE CONTACT: KELSEY BARRETT @ CAMBRIA
WOOD								
WD1	WOOD SPECIES		MAPLE??	TO MATCH PLAM 'A'				LOCATION: WOOD DOORS, WOOD VENEER
STAIN								
WS1	WOOD STAIN			TO MATCH PLAM 'A'				LOCATION: WOOD DOORS, WOOD VENEER
TRIM								
TR1	WALL TILE TRIM	SCHLUTER	DILEX-AHK	NA	TBD	NA		LOCATION: TOILET ROOMS - FLOOR TO WALL & INSIDE CORNER TRANSITIONS NOTE: USE COORDINATING CONNECTORS AND CORNER ACCESSORIES AT ALL CORNERS AND SEAMS
TR2	WALL TILE TRIM	SCHLUTER	JOLLY	TBD	TBD	NA		LOCATION: TOILET ROOMS - TILE TERMINATION NOTE: USE COORDINATING CONNECTORS AND CORNER ACCESSORIES AT ALL CORNERS AND SEAMS
TR3	FLOOR TRIM	SCHLUTER	SCHIENE	TBD	TBD			LOCATION: LOBBY - TILE TO CPT TRANSITION
WINDOW COVERINGS								
WIN1	WINDOW COVERINGS	DRAPER	MANUAL | CLUTCH OPERATED FLEXSHADE NEXD				SHADE: E SCREEN 3% SHADE COLOR: CHARCOAL/CHARCOAL FASCIA/HARDWARE FINISH: TO MATCH STOREFRONT FRAME HEM BAR: STANDARD - SEALED END	LOCATIONS: AS NOTED ON FINISH PLAN CONTACT: DAN LESLIE @ DRAPER INC
CEILING								
ACT1	ACOUSTICAL CEILING TILE	TBD	TBD					LOCATION: TBD CONTACT: TBD
ACT2	ACOUSTICAL CEILING TILE	TBD	TBD					LOCATION: TBD CONTACT: TBD
GWB	ACOUSTICAL CEILING TILE	TBD	TBD					LOCATION: TBD CONTACT: TBD

FINISH GENERAL NOTES:

1. ALL CARPET IS TO BE LAID WITH THE GRAIN RUNNING IN THE SAME DIRECTION, UNLESS NOTED OTHERWISE.
2. ALL CARPET OF EACH TYPE MUST BE FROM THE SAME DYE LOT.
3. CARE SHALL BE TAKEN TO KEEP ADHESIVE OFF THE FACE OF CARPET, ADJACENT WALLS AND SURFACES.
4. ANY SUCH SMEARS SHALL BE REMOVED IMMEDIATELY.
5. ANY DAMAGE TO ADJACENT WALLS, SURFACES AND EQUIPMENT RESULTING FROM THE INSTALLATION OF FINISHES ARE TO BE THE RESPONSIBILITY OF THE SUB-CONTRACTOR CAUSING THE DAMAGE.
6. ALL CARPET SEAMS ARE TO BE BOUND WITH SEAM ADHESIVE.
7. NO SUBSTITUTIONS FOR THE SPECIFIED FINISHES WILL BE ACCEPTED WITHOUT APPROVAL OF THE ARCHITECT.
8. LEAD TIMES MAY BE AN ISSUE! CONFIRM LEAD TIMES WITH ALL MANUFACTURERS NO LESS THAN 8 WEEKS PRIOR TO INSTALLATION OF MATERIALS. ALL MATERIALS MUST BE ORDERED IN TIME TO ALLOW FOR ON-TIME PROJECT COMPLETION.
9. FLOORING CONTRACTOR TO FURNISH AND INSTALL FLOOR FILLER WHERE NEEDED TO TRANSITION BETWEEN DIFFERENT FLOOR MATERIALS WHERE NOTED AND/OR OTHERWISE REQUIRED.
10. PROVIDE ADA APPROVED TRANSITIONS BETWEEN ALL FLOOR FINISHES.

ROOM FINISH SYMBOLS

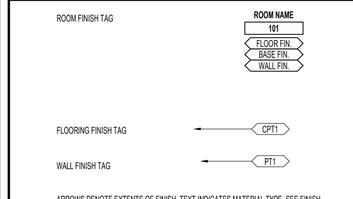

ARROWS DENOTE EXTENTS OF FINISH. TEXT INDICATES MATERIAL TYPE. SEE FINISH SPECIFICATIONS FOR MATERIAL INFORMATION.

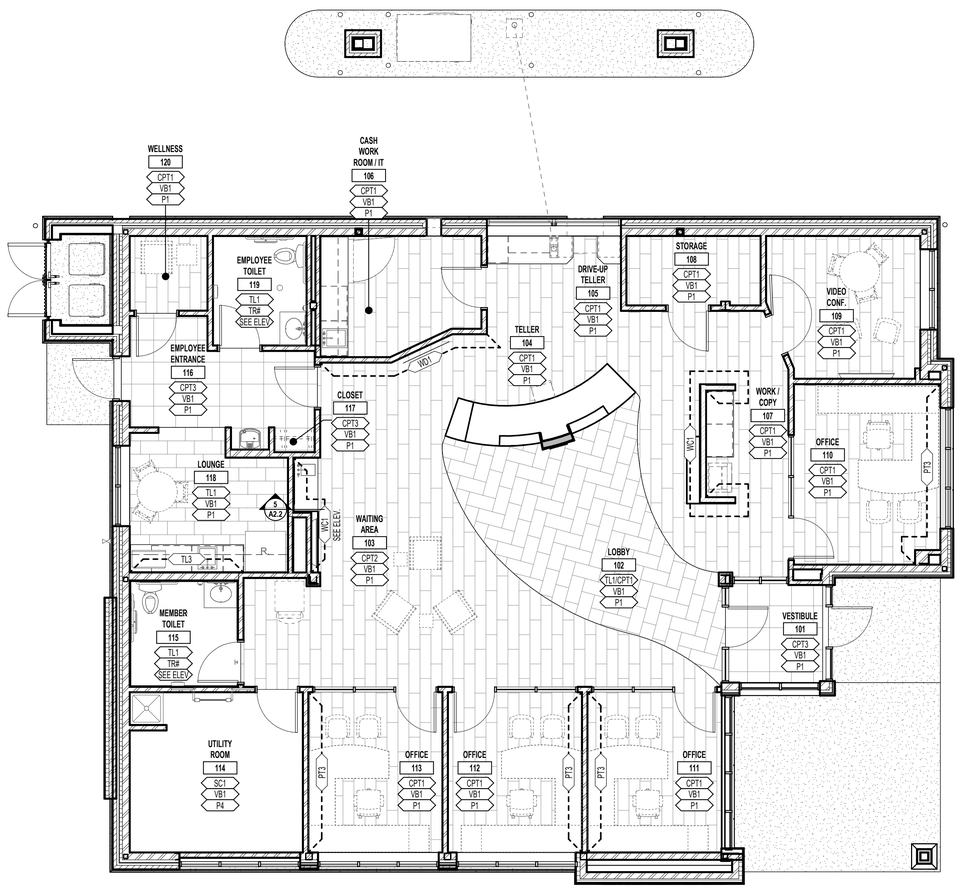

1 F1 **MAIN LEVEL FINISH PLAN**
3/16" = 1'-0"

PLAN NORTH

HTG architects
www.htg-architects.com
Minneapolis Bismarck
1010 Mainstreet, Suite 100
Hopkins, MN 55343
Tel: 952.278.8880

PROJECT

MAYO EMPLOYEES FEDERAL CREDIT UNION

NEW BUILDING

605 WEST AVE S.
LA CROSSE, WI

BID SET	03/27/2026
REVISIONS	
DATE NO	

WISCONSIN SEAN RABOIN 12055 HOPKINS MN ARCHITECT

SEAN C. RABOIN
12055 03/27/2026
Reg No. Date

FINISH PLANS AND SCHEDULES

Drawn By: Author Checked By: Checker

F1

251167

COPYRIGHT © HTG ARCHITECTS

Autodesk Docs://Mayo Employees FCU-La Crosse-W605167_Arch_Central_R25.rvt
3/27/2026 2:46:51 PM

GENERAL STRUCTURAL NOTES

DESIGN CODES:

WISCONSIN COMMERCIAL BUILDING CODE CONTAINED IN CHS. SPS 361-366 OF THE STATE'S ADMINISTRATIVE CODE EDITION #811 (2021 IBC AS AMENDED)
ASCE 7-16 - MINIMUM DESIGN LOADS FOR BUILDINGS AND OTHER STRUCTURES.

DESIGN LOADS:

20 PSF ---------- ROOF DEAD LOAD UNO
40 PSF ---------- GROUND SNOW LOAD (Pg)
Ce ----- 1.0
Ct ------ 1.0 TYPICAL
Ct ------ 1.2 AT CANOPIES
I -------- 1.0
Cs ------ 1.0
28 PSF ---------- ROOF SNOW LOAD (PLUS SNOW DRIFTING) TYPICAL
34 PSF ---------- ROOF SNOW LOAD (PLUS SNOW DRIFTING) AT CANOPIES

108 MPH ---------- ULTIMATE DESIGN WIND SPEED
84 MPH---------- NOMINAL DESIGN WIND SPEED
II ---------- RISK CATEGORY
B ---------- EXPOSURE CATEGORY
± 0.18 ---------- INTERNAL PRESSURE COEFFICIENT
7 FT ---------- END ZONE WIDTH (a)

COMPONENT AND CLADDING ULTIMATE WIND PRESSURES (PSF)					
ZONE \ EFFECTIVE AREA	20 FT²	50 FT²	100 FT²	PARAPET WINDWARD	PARAPET LEEWARD
INTERIOR ZONE	17.6	16.6	16.0	50.7	29.9
END ZONE	21.0	19.1	17.6	64.9	34.2

1.0 ---------- SEISMIC IMPORTANCE FACTOR (I)
II ---------- RISK CATEGORY
D ---------- ASSUMED SITE CLASS
A ---------- SEISMIC DESIGN CATEGORY
0.051g ---------- MAPPED SPECTRAL RESPONSE ACCELERATION PARAMETER (SS)
0.039g ---------- MAPPED SPECTRAL RESPONSE ACCELERATION PARAMETER (S1)
0.055g ---------- DESIGN SPECTRAL RESPONSE ACCELERATION PARAMETER (SDS)
0.063g ---------- DESIGN SPECTRAL RESPONSE ACCELERATION PARAMETER (SD1)

4000 PSF---------- ALLOWABLE SOIL BEARING PRESSURE

NOTES:

1. IT IS THE CONTRACTOR'S SOLE RESPONSIBILITY TO DESIGN AND PROVIDE ADEQUATE TEMPORARY SHORING AND LATERAL BRACING FOR ALL STRUCTURAL ELEMENTS INCLUDING WALLS, COLUMNS, BEAMS, LINTELS, ETC. FOR WIND, SOIL AND CONSTRUCTION LATERAL AND GRAVITY LOADS. THE BRACING MUST REMAIN IN PLACE UNTIL PERMANENT STRUCTURAL SUPPORTS, INCLUDING ROOF AND FLOOR DIAPHRAGMS ARE INSTALLED AND HAVE REACHED THEIR ALLOWABLE SERVICE STRESSES.
2. IT IS THE CONTRACTOR'S SOLE RESPONSIBILITY TO ENSURE THAT CONSTRUCTION CONFORMS TO THE LATEST OSHA SAFETY REQUIREMENTS. NOTIFY THE ARCHITECT AND ENGINEER IMMEDIATELY IF ANY REVISIONS ARE REQUIRED TO THE DRAWINGS DUE TO OSHA SAFETY REQUIREMENTS.
3. GEOTECHNICAL ENGINEER SHALL FIELD VERIFY SOIL BEARING CAPACITY. NOTIFY ARCHITECT AND ENGINEER IF ANY DISCREPANCIES ARE FOUND.
4. THIS PROJECT IS NOT DESIGNED FOR FUTURE CONSTRUCTION.
5. THE ROOF STRUCTURE HAS BEEN REVIEWED FOR PONDING INSTABILITY BASED ON A 15 MINUTE DURATION/100-YEAR RAINFALL INTENSITY OF 7.0 IN/HR AND A MAXIMUM STATIC HEAD OF 3" AND HYDRAULIC HEAD OF 5" AT THE SECONDARY DRAINAGE INLET. THE PLUMBING CONTRACTOR'S ENGINEER MUST CONFIRM THAT THE PROPOSED SECONDARY DRAINAGE SIZES ARE ADEQUATE TO MAINTAIN SECONDARY DRAINAGE FLOW AS NOTED ABOVE.

SUBMITTALS:

ALL SUBMITTED STRUCTURAL SHOP DRAWINGS WILL BE REVIEWED FOR GENERAL CONFORMANCE WITH THE INFORMATION GIVEN AND DESIGN CONCEPTS EXPRESSED IN THE CONTRACT DOCUMENTS. REVIEW OF SUCH SUBMITTALS IS NOT CONDUCTED FOR THE PURPOSE OF DETERMINING THE ACCURACY AND COMPLETENESS OF DETAILS SUCH AS DIMENSIONS AND QUANTITIES AS REQUIRED BY THE CONTRACT DOCUMENTS.

DEFERRED SUBMITTALS:

THE FOLLOWING ITEMS SHALL BE SUBMITTED TO THE BUILDING OFFICIAL AS DEFERRED SUBMITTALS PER IBC SECTION 107.3.4.1:
A. METAL LADDERS AND RAILINGS AND THEIR CONNECTION TO THE BUILDING STRUCTURE
B. METAL CANOPIES AND SUNSHADES AND THEIR CONNECTION TO THE BUILDING STRUCTURE
C. COLD FORMED STEEL FRAMING

FOR ALL DEFERRED STRUCTURAL SUBMITTALS, INCLUDE CALCULATIONS PREPARED AND CERTIFIED BY A PROFESSIONAL ENGINEER REGISTERED IN THE STATE WHERE THE PROJECT IS LOCATED. SEE PROJECT SPECIFICATIONS FOR ADDITIONAL SHOP DRAWING REQUIREMENTS.

SOILS AND FOUNDATIONS:

1. FOUNDATIONS, SLABS ON GRADE AND OTHER ITEMS RELATED TO THE SOILS ARE DESIGNED AND SHALL BE CONSTRUCTED IN ACCORDANCE WITH THE RECOMMENDATIONS OF CHOSEN VALLEY TESTING, INC. GEOTECHNICAL EVALUATION REPORT 26630.25.WIL DATED MARCH 11, 2026
2. MINIMUM DEPTH FROM EXTERIOR GRADE TO BOTTOM OF BUILDING PERIMETER FOOTINGS SHALL BE 48".
3. MINIMUM DEPTH FROM EXTERIOR GRADE TO BOTTOM OF FOOTINGS AT UNHEATED STRUCTURES SHALL BE 60".
4. ALL FOOTINGS ARE CENTERED UNDER WALLS, PILASTERS AND COLUMNS ABOVE UNO.
5. ALL FOUNDATION WALLS SHALL BE LATERALLY BRACED BEFORE BACKFILLING AND COMPACTING.
6. DO NOT BACKFILL AROUND STEEL COLUMNS UNTIL CORROSION RESISTANT ASPHALTIC COATING HAS BEEN INSTALLED BY THE STRUCTURAL STEEL ERECTOR.
7. COORDINATE ALL UNDERGROUND PIPING OR DUCTWORK LOCATIONS AND ELEVATIONS WITH THE MECHANICAL CONTRACTOR. ADJUST FOOTING ELEVATIONS AND PROVIDE SLEEVES PER WALL FOOTING AT UNDERGROUND LINES DETAIL. FOR PIPING OR DUCTWORK PARALLEL TO FOOTING, BOTTOM OF FOOTING ELEVATION SHOULD BE NO HIGHER THAN THE PIPE OR DUCTWORK INVERT ELEVATION PLUS THE HORIZONTAL DISTANCE BETWEEN EDGE OF FOOTING AND EDGE OF PIPING OR DUCTWORK. CONTRACTOR SHALL NOTIFY ARCHITECT AND ENGINEER FOR APPROVAL OF ANY DEVIATIONS PRIOR TO COMMENCING WORK.

CAST-IN-PLACE CONCRETE:

1. DESIGN CODES: IBC CHAPTER 19 & ACI 318-19, BUILDING CODE REQUIREMENTS FOR STRUCTURAL CONCRETE & ACI DETAILING MANUALS LATEST EDITION.
2. MINIMUM 28-DAY COMPRESSIVE STRENGTH SHALL BE:

TYPE	STRENGTH	LOCATION
A	f'c=3000 PSI	MASONRY CORE FILL AND BOND BEAMS WITH 3/8" MAX AGGREGATE SIZE
B	f'c=4000 PSI	INTERIOR SLABS ON GRADE WITH 3/4" MAX AGGREGATE SIZE
C	f'c=3000 PSI	FOOTINGS
D	f'c=4000 PSI	EXTERIOR PIERS & FOUNDATION WALLS - AIR ENTRAINED 6% +/- 1.5%. - MAX WATER/CEMENT RATIO = 0.50
E	f'c=4000 PSI	INTERIOR PIERS & FOUNDATION WALLS
F	f'c=4500 PSI	EXPOSED EXTERIOR CONCRETE - AIR ENTRAINED 6% +/- 1.5%. - MAX WATER/CEMENT RATIO = 0.45

3. REINFORCING STEEL PROPERTIES:
   A. DEFORMED BARS - ASTM A615 GRADE 60 UNO. USE ASTM A706 GRADE 60 FOR WELDABLE REBAR
   B. WELDED WIRE FABRIC - ASTM A1064
4. ALL REINFORCING SHALL BE DETAILED, FABRICATED AND PLACED IN ACCORDANCE WITH THE LATEST ACI MANUALS.
   A. FOR PIERS WITH A CROSS SECTION LARGER THAN 18"x18" AND WITH MORE THAN 4 LONGITUDINAL BARS, ADDITIONAL CROSS TIES (TYPE T9 PER ACI 315) OF SAME SIZE AND SPACING AS MAIN TIES, SHALL BE PROVIDED TO ENSURE THAT ALL NON CORNER BARS ARE LATERALLY SUPPORTED BY THE CORNER OF A TIE
5. SHOP DRAWINGS FOR REINFORCING STEEL AND CONCRETE MIX DESIGNS SHALL BE SUBMITTED FOR APPROVAL.
6. PLACE ALL ITEMS PER APPROVED SHOP DRAWINGS AND APPROVED MIX DESIGNS.
7. PROVIDE ALL ACCESSORIES, CHAIRS, SPACER BARS AND SUPPORTS NECESSARY TO SECURE REINFORCING PER "ACI DETAILING MANUAL" NO OTHER METHODS OR MATERIALS WILL BE ACCEPTABLE.
8. PROVIDE PLASTIC CHAIRS AND SUPPORTS IN ALL AREAS OF EXPOSED CONCRETE.
9. PROVIDE MINIMUM CONCRETE COVER FOR ALL REINFORCING AS FOLLOWS UNO:
   A. CONCRETE CAST AGAINST AND PERMANENTLY EXPOSED TO EARTH ---------- 3"
   B. CONCRETE EXPOSED TO EARTH OR WEATHER: #6 THROUGH #18 BARS ---------- 2"
      #5 BARS AND SMALLER ---------- 1 1/2"
10. PROVIDE CONTINUOUS WALL FOOTING THICKNESS AND BOTTOM REINFORCING AS FOLLOWS (PLACE LONGITUDINAL REINFORCING ABOVE TRANSVERSE REINFORCING):

FOOTING WIDTH	THICKNESS	LONG REINF	TRANSV REINF
1'-8" OR LESS	10"	(2) #5	------------
1'-9" TO 2'-8"	12"	(2) #5	------------
2'-9" TO 3'-4"	14"	(3) #5	------------

11. PROVIDE FOOTING DOWELS FOR CONCRETE OR MASONRY WALLS AND COLUMNS. DOWELS SHALL BE SAME SIZE AND SPACING AS WALL AND COLUMN VERTICAL REINFORCING AND SHALL PROJECT FROM FOOTINGS TO PROVIDE LAP SPLICES AS INDICATED BELOW OR IN THE MASONRY NOTES. PROVIDE 90 DEGREE STANDARD HOOK IN COLUMN AND FREE STANDING WALL FOOTING DOWELS UNO.
12. PROVIDE LAP SPLICES FOR CONCRETE REINFORCING AS FOLLOWS:
    A. TYPICAL LAP SPLICES SHALL BE UNO:
       #6 BARS AND SMALLER ---------- 44 BAR DIAMETERS
       #7 THROUGH #11 BARS ---------- 56 BAR DIAMETERS
    B. THE MINIMUM LAP SPLICE LENGTH FOR ALL SPLICES FOR CONCRETE REINFORCING SHALL BE 24"
13. PROVIDE MINIMUM CONCRETE WALL REINFORCING AS FOLLOWS UNO:

WALL THICKNESS	VERT REINF	HORIZ REINF
6"	#4 @ 16" O.C. CTRD	#4 @ 16" O.C. CTRD
11"	#4 @ 16" O.C. EF	#4 @ 16" O.C. EF
14" AND 15"	#4 @ 16" O.C. EF	#4 @ 12" O.C. EF
20"	#4 @ 12" O.C. EF	#5 @ 15" O.C. EF

14. PROVIDE EXTRA REINFORCING ON ALL SIDES OF ALL CONCRETE WALL AND SLAB OPENINGS EQUAL TO ONE HALF THE INTERRUPTED REINFORCING IN EACH DIRECTION, UNO ON THE DRAWINGS. A MINIMUM OF (1) #5 SHALL BE PROVIDED FOR EACH LAYER OF REINFORCEMENT. EXTEND BARS PAST EDGE OF OPENING THE LAP SPLICE NOTED ABOVE. PROVIDE AN ADDITIONAL #4X4'-0" DIAGONAL BAR AT EACH CORNER FOR EACH LAYER OF REINFORCING.
15. HOT WEATHER AND COLD WEATHER CONCRETE PROVISIONS OF ACI 305R-10 AND ACI 306R-16 SHALL BE FOLLOWED.
16. PROVIDE CONCRETE WALL VERTICAL CONTROL JOINTS FOR WALLS AS FOLLOWS UNO:

WALL THICKNESS	MAXIMUM CONTROL JOINT SPACING
6" TO 11"	24'-0" O.C.
14" TO 20"	34'-0" O.C.

MASONRY:

1. DESIGN CODES: IBC CHAPTER 21, TMS 402-16 BUILDING CODE REQUIREMENTS FOR MASONRY STRUCTURES AND TMS 602-16, SPECIFICATION FOR MASONRY STRUCTURES.
2. HOLLOW CONCRETE MASONRY UNITS SHALL BE NORMAL WEIGHT UNITS PER ASTM C90 REQUIREMENTS. F'm=2000 PSI.
3. ALL MORTAR FOR WALLS ABOVE GRADE SHALL BE TYPE 'S'.
4. MORTAR PER ASTM C270. MINIMUM 28 DAY COMPRESSIVE STRENGTH: TYPE 'S'=1800 PSI
5. COARSE GROUT PER ASTM C476. NO GROUT IS TO BE HAND MIXED ON SITE.
6. MASONRY CEMENT SHALL NOT BE USED IN MORTAR OR GROUT.
7. REINFORCING STEEL:
   A. DEFORMED BARS: ASTM A615 GRADE 60
   B. JOINT REINFORCEMENT: ASTM A1064
8. SUBMIT MORTAR AND GROUT DESIGN MIXES FOR APPROVAL.
9. SUBMIT SHOP DRAWINGS FOR REINFORCING STEEL.
10. WIRE JOINT REINFORCING FOR CONCRETE BLOCK WALLS SHALL BE STANDARD CORROSION RESISTANT 9 GAGE LADDER TYPE (PROVIDE TRI-ROD LADDER FOR MULTI WYTHE WALLS). INSTALL JOINT REINFORCING PER MANUFACTURER'S RECOMMENDATIONS AT A MAXIMUM SPACING 16" O.C. UNO ON DRAWINGS OR PROJECT SPECIFICATIONS.
11. INSTALL MASONRY VERTICAL AND HORIZONTAL REINFORCING PER IBC REQUIREMENTS AND AS FOLLOWS:
    A. SEE PLANS, DETAILS AND SCHEDULES FOR REQUIRED REINFORCING
    B. PROVIDE FULL MORTAR BEDDED FACE SHELLS AND WEBS AROUND ALL GROUTED CELLS FOR BEARING AND TO PREVENT LEAKAGE INTO ADJACENT CELLS
    C. PLACE VERTICAL REINFORCING PRIOR TO PLACING GROUT.
    D. PROVIDE REINFORCEMENT POSITIONERS TO HOLD VERTICAL REINFORCEMENT IN PROPER POSITION AT TOP AND BOTTOM OF ALL LIFTS. LENGTH OF REINFORCING BARS TO BE COORDINATED WITH CONCRETE AND MASONRY CONTRACTORS
    E. GROUT ALL CORES CONTAINING REINFORCING SOLID
    F. MASONRY WALL CELLS TO BE GROUTED WITH CONCRETE SHALL BE FILLED IN MAXIMUM 4'-0" LIFTS. REMOVAL ALL OVERHANGING OBSTRUCTION AND DEBRIS FROM THE CELLS PRIOR TO GROUTING
    G. CONSOLIDATE ALL GROUT BY RODDING OR VIBRATING
    H. PROVIDE REINFORCEMENT LAP SPLICES PER TABLES BELOW:

BARS CENTERED IN WALL			
BAR SIZE	6" CMU	8" CMU	10" CMU & WIDER
#4	24"	24"	24"
#5	-----	30"	30"
#6	-----	38"	36"
#7	-----	-----	42"

BARS PLACED AT INSIDE OR OUTSIDE FACE OF WALL			
BAR SIZE	6" CMU	8" CMU	10" CMU & WIDER
#4	-----	24"	24"
#5	-----	30"	30"
#6	-----	57"	57"
#7	-----	-----	80"

    J. PROVIDE CORNER BAR WITH 2'-0" + 2'-0" LEGS FOR EACH HORIZONTAL BOND BEAM BAR AT CORNERS AND INTERSECTING WALLS
12. MASONRY VERTICAL CONTROL JOINTS:
    A. COORDINATE JOINTS AND CONSTRUCTION DETAILS WITH ARCHITECT. MAXIMUM JOINT SPACING IS 24'-0"
    B. LOCATE JOINTS 2'-0" FROM ALL CORNERS AND EDGE OF ALL OPENING EXCEPT AS NOTED PER SECTIONS AND DETAILS
    C. FOR LOAD BEARING MASONRY, CONTINUE BOND BEAM REINFORCING AND GROUT THROUGH CONTROL JOINTS
    D. FORM CONTROL JOINTS IN BLOCK WITH JAMB BLOCK WITH NEOPRENE INSERTS, OR ROD AND CAULK. CONTRACTOR OPTION: USE STANDARD BLOCK, LINE ONE SIDE WITH BUILDING PAPER AND GROUT SOLID TO FORM KEYWAY

STEEL - STRUCTURAL:

1. DESIGN CODES: IBC CHAPTER 22, AISC 360-16, SPECIFICATION FOR STRUCTURAL STEEL BUILDINGS AND AISC 303-16, CODE OF STANDARD PRACTICE FOR STEEL BUILDINGS AND BRIDGES.
2. STEEL PROPERTIES:
   A. ASTM A992 (Fy=50 KSI) FOR WIDE FLANGE SHAPES
   B. ASTM A500 GRADE C (Fy=50 KSI) FOR TUBULAR MEMBERS
   C. ASTM A36 STEEL (Fy=36 KSI) FOR ALL OTHER MEMBERS UNO
   D. ASTM F3125 GRADE A325 OR GRADE F1852 UNO FOR CONNECTION BOLTS
   E. ASTM F1554 GRADE 36 FOR ANCHOR BOLTS UNO
   F. WELDS = AMERICAN WELDING SOCIETY (AWS) E70XX ELECTRODES
3. PROVIDE 5000 PSI NON-SHRINK GROUT UNDER ALL STEEL BASE AND BEARING PLATES PER THE SECTIONS AND DETAILS. GROUT PLATES PRIOR TO LOADING ROOF MEMBERS WITH PRECAST PLANK OR DECKING MATERIALS.
4. PROVIDE CORROSION RESISTANT ASPHALTIC COATING OR EQUAL AROUND ALL STRUCTURAL STEEL BELOW GRADE.
5. ALL WELDS SHALL BE MADE BY CERTIFIED WELDERS AND IN ACCORDANCE WITH AMERICAN WELDING SOCIETY (AWS) - D1.1 LATEST EDITION.
6. STRUCTURAL STEEL FABRICATOR SHALL FURNISH ALL PLATES AND ANGLES CAST IN CONCRETE AND MASONRY FOR CONNECTING STEEL JOISTS, BEAMS, COLUMNS, DECK, ETC UNO. SEE APPLICABLE NOTES ON THIS SHEET AND COORDINATE WITH MASONRY AND CONCRETE CONTRACTORS.
7. ALL COLUMN BASE AND CAP PLATES TO BE WELDED AROUND ALL SIDES.
8. PRIME PAINT PER AISC CODE OF STANDARD PRACTICE FOR STEEL BUILDINGS SECTION 6.5, UNO ON ANY CONSTRUCTION DOCUMENTS.
9. STRUCTURAL STEEL EXPOSED TO WEATHER SHALL BE HOT-DIP GALVANIZED. TOUCH-UP WELDS AND REPAIR HOT-DIP GALVANIZED COATING PER ASTM A780.
10. STRUCTURAL STEEL FABRICATOR SHALL PROVIDE HOLES FOR JOIST ERECTION BOLTS AS REQUIRED BY OSHA. HOLES SHALL BE 9/16"Ø FOR K-SERIES JOISTS.
11. STRUCTURAL STEEL FABRICATOR SHALL SUBMIT SHOP DRAWINGS FOR APPROVAL.
12. MISCELLANEOUS STEEL FABRICATOR SHALL SUBMIT SHOP DRAWINGS FOR APPROVAL, INCLUDING STRUCTURAL CALCULATIONS FOR STAIRS, LADDERS, RAILINGS AND THEIR CONNECTIONS CERTIFIED BY A PROFESSIONAL ENGINEER LICENSED IN THE STATE WHERE THE PROJECT IS LOCATED.

STEEL - STRUCTURAL (CONT):

1. PROVIDE DOUBLE ANGLE SIMPLE SHEAR CONNECTIONS AS SHOWN BELOW. ALTERNATE CONNECTIONS WILL BE ALLOWED PROVIDED THAT CONNECTION DESIGN CALCULATIONS, CERTIFIED BY A PROFESSIONAL ENGINEER REGISTERED IN THE STATE WHERE THE PROJECT IS LOCATED, ARE SUBMITTED BY THE FABRICATOR FOR REVIEW.

BOLTED/WELDED BEAM CONNECTION REQUIREMENTS

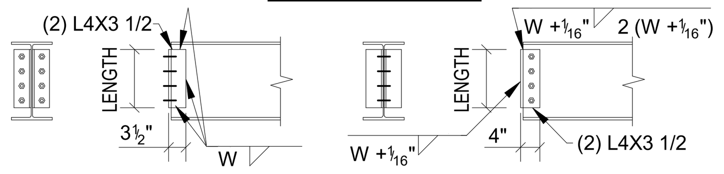

BEAM SIZE	# OF ROWS OF 3/4"Ø BOLTS	CONN ANGLES THICKNESS	CONN ANGLES LENGTH	WELD SIZE
W36	10	3/8"	2'-5 1/2"	1/4"
W33	9	3/8"	2'-2 1/2"	1/4"
W30	8	3/8"	1'-11 1/2"	1/4"
W27	7	3/8"	1'-8 1/2"	1/4"
W24	6	3/8"	1'-5 1/2"	1/4"
W21	5	3/8"	1'-2 1/2"	1/4"
W18	4	3/8"	0'-11 1/2"	1/4"
W16	4	5/16"	0'-11 1/2"	1/4"
W14	3	5/16"	0'-8 1/2"	1/4"
W12	3	5/16"	0'-8 1/2"	1/4"
W10	2	5/16"	0'-5 1/2"	1/4"
W8	2	5/16"	0'-5 1/2"	1/4"

NOTES:
1. USE E70XX ELECTRODES.
2. BOLTS SHALL BE TIGHTENED IN PROPERLY ALIGNED HOLES TO A SNUG-TIGHT CONDITION AS DEFINED BY THE LATEST EDITION OF AISC "SPECIFICATION FOR STRUCTURAL JOINTS USING HIGH-STRENGTH BOLTS" UNO.
3. USE BENT PLATES AS REQUIRED AT SKEWED BEAMS.
4. CONTRACTOR OPTION TO USE ALL-BOLTED OR ALL-WELDED CONNECTIONS.

STEEL - JOISTS:

1. DESIGN CODE: STEEL JOIST INSTITUTE (SJI) "STANDARD SPECIFICATIONS, LOAD TABLES AND WEIGHT TABLES FOR STEEL JOISTS AND JOIST GIRDERS" LATEST EDITION.
2. ALL JOISTS SHALL BE CAMBERED PER SJI SPECIFICATIONS UNO.
3. PROVIDE END BEARING DEPTH AND BEARING LENGTH PER SJI SPECIFICATIONS, UNO.
4. WHERE JOISTS BEARS ON A BEAM ON ONE SIDE ONLY, BEARING LENGTH TO EQUAL TO THE BEAM FLANGE WIDTH. WHERE JOISTS BEAR ON A BEAM ON BOTH SIDES, BUTT JOISTS OR PROVIDE A 1/2" MAX GAP, BUT MAINTAINING THE REQUIRED MINIMUM JOIST BEARING LENGTH, PROVIDE EXTENDED ENDS WHERE REQUIRED OR SHOWN ON DRAWINGS.
5. STEEL JOISTS LOCATED AT COLUMNS AND ALL JOISTS 40'-0" OR GREATER IN LENGTH SHALL BE BOLTED TO BEAMS TO MEET OSHA REQUIREMENTS. ERECT BOLTED JOISTS FIRST AND WELD WHEN OTHER JOISTS ARE INSTALLED. IF JOIST IS NOT LOCATED AT COLUMN CENTER LINE, PROVIDE OSHA BOLTED CONNECTION AT FIRST JOIST EACH SIDE OF COLUMN.
6. FIELD WELD ALL STEEL JOISTS TO BEAMS, COLUMNS, ANGLES OR PLATES CAST IN MASONRY OR CONCRETE PER SJI SPECIFICATIONS UNO.
7. ALL STEEL JOIST BRIDGING AND ITS ANCHORAGE SHALL BE DESIGNED AND PROVIDED BY JOISTS MANUFACTURER PER SJI SPECIFICATIONS UNO. COORDINATE LOCATIONS WITH MECH CONTRACTOR TO MISS SPRINKLER HEADS AND DUCTWORK.
8. THE JOIST MANUFACTURER SHALL BE RESPONSIBLE FOR AND SHALL SUBMIT SHOP DRAWINGS FOR APPROVAL. CALCULATIONS FOR ALL SPECIAL JOISTS SHALL BE CERTIFIED AND SUBMITTED BY A PROFESSIONAL ENGINEER REGISTERED IN THE STATE WHERE THE PROJECT IS LOCATED.
9. THE DESIGN OF ALL JOIST MEMBERS AND ELEMENTS SHOWN ON THE DRAWINGS ARE FOR THE IN-PLACE COMPLETED BUILDING. ALL LOADING CRITERIA AND VERIFICATION OF DESIGN FOR LOADING, SUCH AS HANDLING, TRANSPORTATION AND ERECTION ARE THE SOLE RESPONSIBILITY OF THE JOIST MANUFACTURER.
10. SPECIAL JOISTS SHALL BE DESIGNED FOR THE SERVICE LOADS INDICATED ON THE DRAWINGS.
11. JOISTS AND STRUCTURAL STEEL FABRICATORS SHALL SHOW ALL FIELD WELDING REQUIREMENTS ON SHOP DRAWINGS.
12. STEEL JOISTS SHALL BE SHOP PRIMED WITH STANDARD PRIMER UNO. VERIFY COLOR WITH ARCHITECTURAL DRAWINGS.
13. STEEL ROOF JOISTS ARE DESIGNED FOR THE FOLLOWING SPRINKLER PIPE LOADS:
    A. A SINGLE 4" DIAMETER MAIN RUNNING PARALLEL TO JOIST OR A SINGLE 6" MAIN TRAPEZED BETWEEN TWO JOISTS, OR
    B. A SINGLE 4" MAIN RUNNING PERPENDICULAR TO JOIST AND HUNG AT A MINIMUM OF EVERY OTHER JOIST OR A SINGLE 6" MAIN RUNNING PERPENDICULAR TO JOIST AND HUNG AT EVERY JOIST
    C. FIRE PROTECTION CONTRACTOR SHALL ARRANGE SPRINKLER PIPES TO SATISFY JOIST DESIGN OR PROVIDE SPRINKLER PIPE LAYOUT AND LOADS AS WATER FILLED PIPE TO JOIST SUPPLIER TO DESIGN SPRINKLER PIPES AS ADDED JOIST LOADS

STEEL - DECK:

1. DESIGN CODE: STEEL DECK INSTITUTE (SDI): "DESIGN MANUAL FOR COMPOSITE DECKS, FORM DECKS AND ROOF DECKS" LATEST EDITION.
2. STEEL ROOF DECK SHALL CONFORM TO EITHER ASTM A653 OR A1063 FOR DECK THAT IS GALVANIZED AND SHALL CONFORM TO EITHER ASTM A1008 OR A1039 FOR DECK THAT IS NOT GALVANIZED. DECK SHALL HAVE A MINIMUM YIELD STRENGTH OF 50 KSI. DECK SIZE, TYPE AND GAUGE TO BE AS INDICATED ON PLANS.
3. FASTEN STEEL DECK TO ALL INTERIOR STEEL SUPPORTS AS SHOWN ON PLANS. PROVIDE FASTENERS AT 6" O.C. TO PLATE, ANGLE OR BEAM AT BUILDING PERIMETER UNO. SIDELAP FASTENING SHALL BE AS INDICATED ON PLANS.
4. ALL WELDS SHALL BE MADE BY CERTIFIED WELDERS AND IN ACCORDANCE WITH AMERICAN WELDING SOCIETY (AWS) - D1.3 LATEST EDITION. ALL HILTI PAF'S SHALL BE FASTENED BY TRAINED AND CERTIFIED INSTALLERS ON THE GENERAL USE OF POWDER-ACTUATED TECHNOLOGY FOR ATTACHMENT OF THE STEEL DECK.
5. SPAN DECK SECTION MINIMUM (3) SPANS CONTINUOUS, UNO.
6. THE STEEL DECK FABRICATOR SHALL SUBMIT SHOP DRAWINGS FOR APPROVAL.

STEEL - DECK (CONT):

7. STEEL ROOF DECK TO BE SHOP PRIMED WITH STANDARD PRIMER UNO. VERIFY COLOR WITH ARCHITECTURAL DRAWINGS.
8. STEEL ROOF DECK SHALL HAVE GALVANIZED FINISH EQUAL TO G30 MINIMUM.

COLD FORMED STEEL FRAMING:

1. THE INFORMATION SHOWN ON THE STRUCTURAL DRAWINGS IS ONLY CONCEPTUAL AND IS INTENDED TO EXPRESS MINIMUM COLD-FORMED STEEL SYSTEM MATERIAL, DESIGN AND CONSTRUCTION PERFORMANCE CRITERIA. THE COLD-FORMED STEEL SYSTEM SUPPLIER SHALL PROVIDE AND SUBMIT FOR APPROVAL THE FINAL STRUCTURAL ENGINEERING DESIGN WHICH INCLUDES DETAILED SHOP DRAWINGS AND CALCULATIONS OF THE MEMBER SIZES, THICKNESS, SPACING AND ALL CONNECTIONS. ALL SUBMITTALS MUST BE CERTIFIED BY A PROFESSIONAL ENGINEER REGISTERED IN THE STATE OF THE PROJECT.
2. DESIGN CODES:
   A. IBC CHAPTER 22, SECTION 2210 AND 2211-COLD FORMED STEEL AND LIGHT-FRAMING CONSTRUCTION. SEE PLANS FOR SIZE AND THICKNESS OF STUDS
   B. 2016 AISI NORTH AMERICAN SPECIFICATIONS FOR THE DESIGN OF COLD-FORMED STEEL STRUCTURAL MEMBERS
3. SEE ARCH FOR REQUIRED SIZE AND MINIMUM THICKNESS OF STUDS. YIELD STRESS SHALL BE 33KSI FOR 33 MIL AND 43 MIL MEMBERS AND 50KSI FOR ALL OTHER MEMBERS.

600S162-43
- MEMBER DEPTH IN HUNDREDS OF INCHES (EX. 600=6")
- MEMBER TYPE S=STUD, T=TRACK
- FLANGE WIDTH OF MEMBER IN HUNDREDS OF INCHES (EX. 162=1 5/8", 200=2")
- MEMBER THICKNESS IN MILS

MILS TO GAUGE CONVERSION CHART	
MILS	GAUGE
33	20 GA
43	18 GA
54	16 GA
68	14 GA
97	12 GA

4. ALL STEEL STUD FASTENERS SHALL BE WELDED CONNECTIONS, OR SHALL BE #10-16 "TEK" SCREWS MANUFACTURED BY "ITW BUILDEX" OR APPROVED EQUAL UNO. ALL WELDS SHALL BE MADE BY CERTIFIED WELDERS AND IN ACCORDANCE WITH AMERICAN WELDING SOCIETY (AWS)-D13 LATEST EDITION. THE CENTER-TO-CENTER SPACING AND EDGE DISTANCE FOR ALL SCREW FASTENERS SHALL BE AT LEAST 3X (NOMINAL DIAMETER) UNO.
5. ALL POWDER ACTUATED FASTENERS (PAFS) SHALL BE HILTI "X-U" OR APPROVED EQUAL UNO.
6. SPLICES IN WALL STUDS, JOISTS OR HEADERS SHALL NOT BE PERMITTED UNLESS SPLICE CONNECTIONS ARE DESIGNED AND DETAILED BY SUPPLIER.
7. ALL FRAMING COMPONENTS SHALL BE CUT SQUARELY FOR ATTACHMENT TO PERPENDICULAR MEMBERS, DO NOT TORCH CUT. MEMBERS SHALL BE HELD POSITIVELY IN PLACE UNTIL PROPERLY FASTENED.
8. STUDS SHALL BE PLUMBED, ALIGNED AND SECURELY ATTACHED TO THE FLANGE OR WEB OF BOTH UPPER AND LOWER TRACKS. STUDS SHALL HAVE FULL BEARING AGAINST INSIDE TRACK WEB PRIOR TO STUD AND TRACK ATTACHMENT.
9. WALL STUD BRIDGING SHALL BE ATTACHED IN A MANNER TO PREVENT STUD ROTATION. BRIDGING ROWS SHALL BE SPACED ACCORDING TO THE MANUFACTURER'S RECOMMENDATION. THE MINIMUM BRIDGING SHALL BE 6'-0" O.C. FOR WIND LOADED WALLS AND 4'-0" O.C. FOR AXIAL LOADED WALLS.
10. CONTINUOUS BOTTOM RUNNER TRACKS FOR ALL EXTERIOR WALLS SHALL BE ANCHORED TO FOUNDATION WALLS WITH POWDER ACTUATED FASTENERS (PAF). MAXIMUM SPACING TO BE 16" O.C.
11. CONTRACTOR IS RESPONSIBLE FOR AVOIDING THE OVERLOAD OF COLD FORMED STEEL MEMBERS DURING ERECTION AND FOR PROVIDING ADEQUATE TEMPORARY BRACING UNTIL THE PERMANENT BRIDGING AND SHEATHING ARE IN PLACE.
12. TOUCH-UP WELDS AND REPAIR HOT-DIP GALVANIZED COATING PER ASTM A780.

SPECIAL INSPECTION AND TESTING:

1. SPECIAL INSPECTION AND TESTING IS REQUIRED IN ACCORDANCE WITH THE LATEST EDITION OF IBC, CHAPTER 17, FOR THE FOLLOWING PORTIONS OF CONSTRUCTION:
2. THE ENGINEER OF RECORD REQUIRES THE SUPERVISING PARTY TO CONDUCT SPECIAL INSPECTIONS AND TESTING IN ACCORDANCE WITH THE LATEST EDITION OF IBC, CHAPTER 17, FOR THE FOLLOWING PORTIONS OF CONSTRUCTION:
   A. CONCRETE
   B. SOILS: GEOTECHNICAL ENGINEER SHALL FIELD VERIFY SOIL BEARING CAPACITY AND COMPACTION PER THE REQUIREMENTS OF THE GEOTECHNICAL REPORT
   C. CAST-IN-PLACE ANCHORS IN CONCRETE
   D. POST-INSTALLED ANCHORS IN CONCRETE (PER PRODUCT ICC-ESR REQUIREMENTS)
   E. REINFORCING STEEL IN CONCRETE
   F. REINFORCING STEEL IN MASONRY - LEVEL 2
   G. STRUCTURAL WELDING - VISUAL TESTING (UNO)
   H. STRUCTURAL WELDING - ULTRASONIC OR RADIOGRAPHIC
   J. TESTING (ALL FULL OR PARTIAL PENETRATION WELDS)
   K. HIGH STRENGTH BOLTING
   L. IF THE STRUCTURAL STEEL AND/OR JOIST FABRICATOR IS NOT AISC CERTIFIED, IN-SHOP SPECIAL INSPECTIONS ARE REQUIRED AND SHALL BE PAID FOR BY THE FABRICATOR
   M. STEEL DECK FASTENING
3. THE GENERAL CONTRACTOR SHALL SUBMIT A SPECIAL STRUCTURAL TESTING AND INSPECTION PROGRAM SCHEDULE TO THE ARCHITECT AND ENGINEER PRIOR TO THE START OF CONSTRUCTION.
4. THE TESTING/INSPECTION AGENCY SHALL SUBMIT A FINAL CERTIFIED REPORT AT SUBSTANTIAL COMPLETION INDICATING THAT ALL WORK INCLUDING ITEMS REQUIRING SPECIAL INSPECTIONS AND TESTING HAS BEEN CONSTRUCTED IN ACCORDANCE WITH THE CONTRACT DOCUMENTS. A LIST OF ANY UNRESOLVED DEFICIENCIES SHALL BE INCLUDED IN THIS REPORT.

STRUCTURAL ABBREVIATIONS:

	ABBREVIATION	MEANING
	&	AND
	@	AT (CL TO CL SPACING)
	CL	CENTERLINE
	Ø	ROUND OR DIAMETER
	#	POUND OR NUMBER
A	AB	ANCHOR BOLT
	AD	AREA DRAIN
	ADD'L	ADDITIONAL
	ADDM	ADDENDUM
	ADJ	ADJACENT
	AFF	ABOVE FINISHED FLOOR
	ALT	ALTERNATE
	APPROX	APPROXIMATE
	ARCH	ARCHITECTURAL/ITECT
B	B/O	BOTTOM OF
	BF	BRACED FRAME
	BFE	BOTTOM FOOTING ELEVATON
	BLDG	BUILDING
	BLK	BLOCK
	BLKG	BLOCKING
	BM	BEAM
	BOT	BOTTOM
	BRG	BEARING
	BSMT	BASEMENT
	BT	BENT
	BTWN	BETWEEN
C	CANT	CANTILEVER
	CFS	COLD FORMED STEEL
	CIP	CAST-IN-PLACE
	CJ	CONTROL JOINT
	CL	CENTERLINE
	CLR	CLEAR
	CO	CLEAN OUT
	COL	COLUMN
	COMP	COMPOSITE
	CONC	CONCRETE
	CONN	CONNECT/-ED/-ION
	CONST	CONSTRUCT/-ION
	CONT	CONTINUE/-OUS
	CONTR	CONTRACT/-OR
	CMU	CONCRETE MASONRY UNIT
	COORD	COORDINATE
	CTR, CTRD	CENTER, CENTERED
	CU FT	CUBIC FEET
	CY	CUBIC YARD
D	DBL	DOUBLE
	DBL TEE, TT	DOUBLE TEE
	DEAD LD, DL	DEAD LOAD
	DEPT	DEPARTMENT
	DIA, Ø	DIAMETER
	DIAG	DIAGONAL
	DIM	DIMENSION
	DN	DOWN
	DO	DITTO
	DP	DEPTH OR DEEP
	DR	DOOR
	DTL	DETAIL
	DWG	DRAWING
	DWL	DOWEL
E	EA	EACH
	EF	EACH FACE
	EJ, EXP JT	EXPANSION JOINT
	EL	ELEVATION
	ELEC	ELECTRICAL
	ELEV	ELEVATOR
	EMBED	EMBEDMENT, EMBEDDED
	EQ, =	EQUAL
	EQUIP	EQUIPMENT
	ERECT	ERECTION
	EXIST	EXISTING
	EXP	EXPANSION
	EXT	EXTERIOR
	EW	EACH WAY
F	FAB	FABRICATE
	FD	FLOOR DRAIN
	FDN	FOUNDATION
	FFE	FINISHED FLOOR ELEVATION
	FIN	FINISH
	FLG	FLANGE
	FLR	FLOOR
	FP	FIREPROOFING
	FRMG	FRAMING
	FT, '	FOOT
	FTG	FOOTING
	FV	FIELD VERIFY
G	GA	GAUGE
	GALV	GALVANIZED
	GC	GENERAL CONTRACTOR
	GEN'L	GENERAL
	GLU-LAM, GL	GLUE LAMINATED WOOD
	GR BM	GRADE BEAM
H	H	HIGH
	HD	HEADED
	HDR	HEADER
	HK	HOOK
	HORIZ	HORIZONTAL
	HT	HEIGHT
	HVAC	HEATING, VENTILATION AND AIR CONDITIONING
I	I/F	INSIDE FACE
	IE	INVERT ELEVATION
	IN, "	INCH
	INFO	INFORMATION
	INSUL	INSULATION
	INT	INTERIOR
	INV	INVERT
J	JBE	JOIST BEARING ELEVATION
	JST	JOIST
	JT, JNT	JOINT
K	K	KIPS
	KO	KNOCK OUT
	KSI	KIPS PER SQUARE INCH
L	LB, #	POUND
	LD	LOAD
	LF	LINEAL FOOT
	LG, LGT	LENGTH, LONG
	LIVE LD, LL	LIVE LOAD
	LLH	LONG LEG HORIZONTAL
	LLV	LONG LEG VERTICAL
	LOC	LOCATION, LOCATE
	LONG	LONGITUDINAL
	LSH	LONG SIDE HORIZONTAL
	LSL	LAMINATED STRAND LUMBER
	LSV	LONG SIDE VERTICAL
	LT WT	LIGHT WEIGHT
	LVL	LAMINATED VENEER LUMBER
M	MAN	MANUAL
	MAS	MASONRY
	MAT'L	MATERIAL
	MAX	MAXIMUM
	MECH	MECHANICAL
	MEMB	MEMBRANE
	MEZZ	MEZZANINE
	MFR	MANUFACTURER
	MIN	MINIMUM
	MISC	MISCELLANEOUS
	MO	MECHANICAL OPENING
	MTL	MATERIAL
N	#, NO.	NUMBER
	NA, N/A	NOT APPLICABLE
	NIC	NOT IN CONTRACT
	NOM	NOMINAL
	NTS	NOT TO SCALE
O	O/F	OUTSIDE FACE
	O.C.	ON CENTER
	OD	OVERFLOW DRAIN
	OH DR	OVERHEAD DOOR
	OPNG	OPENING
	OPP	OPPOSITE
P	P&J	PAN AND JOIST
	P/C	PRECAST CONCRETE
	PAF	POWDER ACTUATED FASTENER
	PART	PARTITION
	PL	PLATE
	PLBG	PLUMBING
	PLF	POUNDS PER LINEAR FOOT
	PNL	PANEL
	PRELIM	PRELIMINARY
	PREP	PREPARATION
	PROJ	PROJECT/-ION
	PSF	POUNDS PER SQUARE FOOT
	PSI	POUNDS PER SQUARE INCH
	PT	POST TENSION
Q	QUAN, QTY	QUANTITY
R	R	RADIUS
	RD	ROOF DRAIN
	REC	RECESSED, RECOMMEND
	REF	REFERENCE
	REINF	REINFORCE/-ING/-ED
	REQ'D	REQUIRED
	RET	RETAINING
	REV	REVISION
	RO	ROUGH OPENING
S	SCHED	SCHEDULE
	SEC, SECT	SECTION
	SF, SQ FT	SQUARE FOOT
	SHT	SHEET
	SIM	SIMILAR
	SJI	STEEL JOIST INSTITUTE
	SL	SNOW LOAD
	SPA	SPACES/-ING
	SPEC	SPECIFICATION(S)
	SQ	SQUARE
	SQ YD	SQUARE YARD
	STD	STANDARD
	STIFF	STIFFENER/-S
	STIR	STIRRUPS
	STL	STEEL
	STL JST	STEEL JOIST
	STOR	STORAGE
	STR, STRT	STRAIGHT
	STRUC(T)	STRUCTURAL
	SYM	SYMMETRICAL
T	T&B	TOP AND BOTTOM
	T&G	TONGUE AND GROOVE
	T/O	TOP OF
	TBE	TOP OF BEAM ELEVATION
	TDE	TOP OF DECK ELEVATION
	TFE	TOP OF FOOTING ELEVATION
	TGE	TOP OF GIRDER ELEVATION
	THRU	THROUGH
	TPE	TOP OF PLANK ELEVATION
	TRANS(V)	TRANSVERSE
	TRTD	TREATED
	TSE	TOP OF SLAB ELEVATION
	TYP	TYPICAL
	TWE	TOP OF WALL ELEVATION
U	UNFIN	UNFINISHED
	UNO	UNLESS NOTED OTHERWISE
V	VERT	VERTICAL
W	W	WIDE/WIDE FLANGE
	W/	WITH
	W/O	WITHOUT
	WD	WOOD
	WDW	WINDOW
	WP	WORK POINT
	WT	WEIGHT
	WWF	WELDED WIRE FABRIC

STRUCTURAL DRAWING SHEET INDEX

S0.1 GENERAL STRUCTURAL NOTES
S1.1 FOUNDATION PLAN
S2.1 ROOF FRAMING PLAN
S3.1 SECTIONS AND DETAILS
S3.2 SECTIONS AND DETAILS
S3.3 SECTIONS AND DETAILS

HTG architects
www.htg-architects.com
Minneapolis Bismarck
1010 Mainstreet, Suite 100
Hopkins, MN 55343
Tel: 952.278.8880

PROJECT

MAYO EMPLOYEES FEDERAL CREDIT UNION

NEW BUILDING

605 WEST AVE S.
LA CROSSE, WI

ISSUED SET 3/27/2026
REVISIONS
DATE NO

WISCONSIN
MICHAEL J VAN DE RIET
48987-6
MINNEAPOLIS, MN
PROFESSIONAL ENGINEER
3/27/2026

ISS INNOVATIVE STRUCTURAL SOLUTIONS, P.A.
5279 Kyler Avenue NE Albertville MN 55301
Phone: 763.425.9960 ■ www.isseng.com

GENERAL STRUCTURAL NOTES

Drawn By: JMW Checked By: BRP

S0.1

70026

COPYRIGHT © HTG ARCHITECTS

SEE ARCH/CIVIL FOR EXACT LOCATION ON SITE

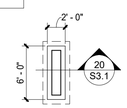

2 S1.1 MONUMENT SIGN FOUNDATION PLAN
1/8" = 1'-0"

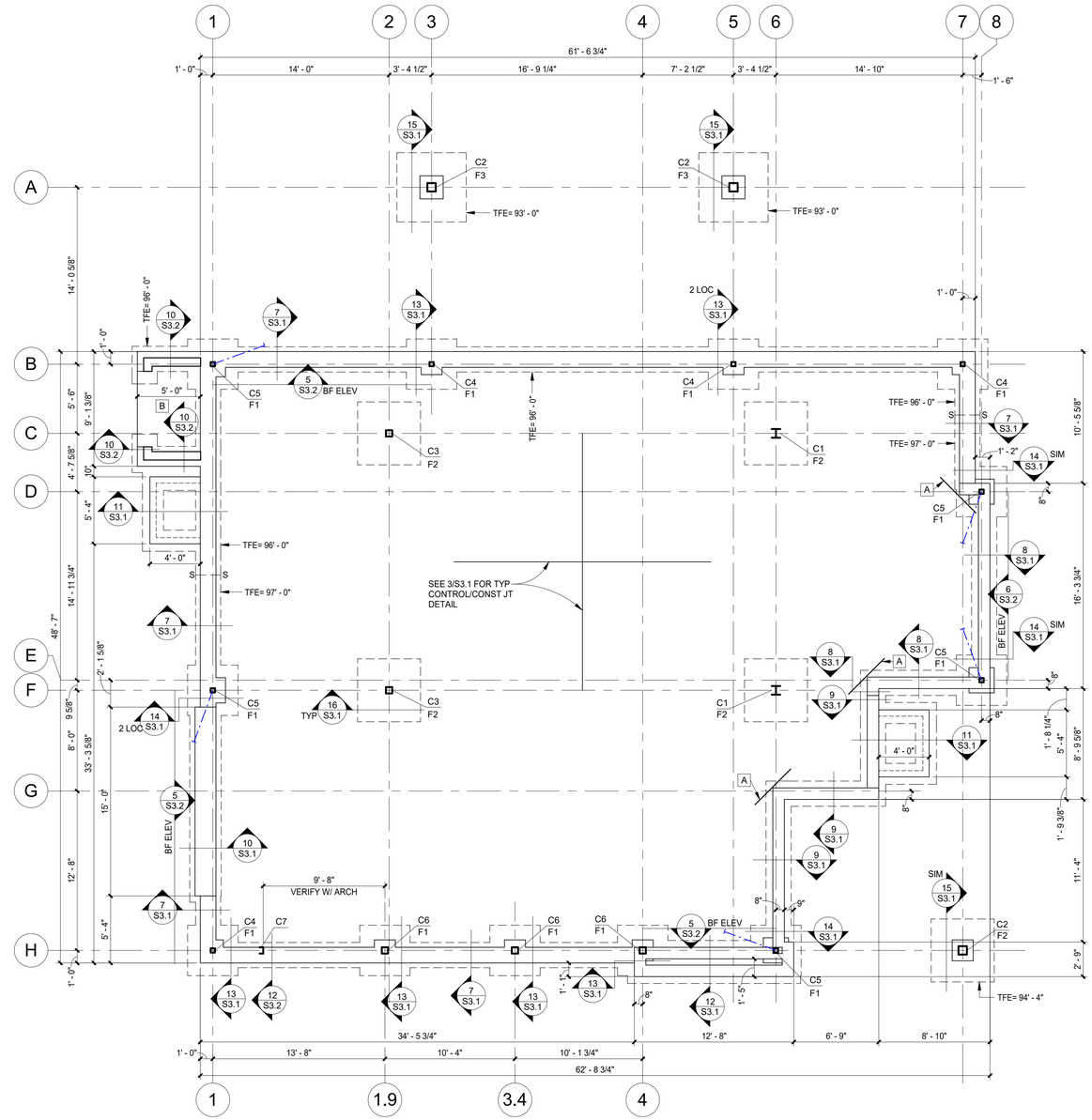

PLAN NORTH TRUE NORTH

1 S1.1 FOUNDATION PLAN
3/16" = 1'-0"

FOUNDATION PLAN NOTES:

1. VERIFY ALL DIMENSIONS WITH ARCHITECTURAL DRAWINGS.
2. SEE ARCH DRAWINGS FOR SIZE AND LOCATION OF ALL WALL OPENINGS.
3. FLOOR SLAB SHALL BE 4" MINIMUM CONCRETE SLAB ON GRADE WITH 6X6-W1.4XW1.4 WWF. FINISHED FLOOR ELEVATION (FFE) = 100'-0". VERIFY ALL DEPRESSED AND SLOPED SLABS WITH ARCH DRAWINGS AND MECH/ELEC CONTRACTORS.
4. ALL CONTINUOUS WALL FOOTINGS SHALL BE 2'-0"W X 1'-0"D WITH (2) #5 CONTINUOUS BOTTOM UNO.
5. TOP OF EXTERIOR FOOTING ELEVATION (TFE) = 97'-0" UNO.
6. TOP OF INTERIOR FOOTING ELEVATION (TFE) = 99'-0" UNO.
7. S----S ON PLAN DENOTES STEPPED FOOTING. SEE SECTION 1/S3.1.
8. SEE DETAIL 2/S3.1 FOR DROPPED FOOTING AT ALL UNDERGROUND MECHANICAL LINES ENTERING BUILDING.
9. SEE DETAILS 4/S3.1, 5/S3.1 AND 6/S3.1 FOR TYPICAL FOUNDATION WALL JOINTS AND CORNER REINFORCING.
10. "CX" ON PLAN DENOTES STEEL COLUMN SIZE. SEE STEEL COLUMN SCHEDULE ON THIS SHEET.
11. "FX" ON PLAN DENOTES FOOTING SIZE. SEE FOOTING SCHEDULE ON THIS SHEET.
12. SEE SECTIONS AND DETAILS FOR SIZE OF CAST-IN-PLACE CONCRETE FOUNDATION WALLS. SEE GENERAL NOTES FOR REINFORCING REQUIREMENTS.
13. EXTEND ALL FOOTINGS MINIMUM 1'-0" BEYOND END OF FOUNDATION WALLS UNO. 1'-0" TYP

FOUNDATION KEYNOTES:

A PROVIDE (2) #4 X 4'-0" DIAGONAL BARS IN SLAB ON GRADE AT INSIDE CORNERS.

B 6" MINIMUM CONCRETE SLAB ON GRADE WITH #4 @ 12" O.C. EACH WAY CENTERED. SEE ARCH FOR TOP OF SLAB ELEVATION (TSE) AND SLOPES.

STEEL COLUMN SCHEDULE

MARK	TYPE	BASE PLATE	REMARKS
C1	W8X40	3/4"X14"X14"	
C2	HSS8X8X1/4	1"X16"X16"	
C3	HSS6X6X3/8	3/4"X12"X12"	
C4	HSS4X4X1/4	3/4"X10"X10"	
C5	HSS4X4X1/4	3/4"X12"X12"	
C6	HSS6X6X1/4	3/4"X12"X12"	
C7	MC6X15.3	1/2"X6"X6"	

FOOTING SCHEDULE

MARK	SIZE	BOT REINF EW	REMARKS
F1	4'-0"X4'-0"X12"	(5) #5	
F2	5'-0"X5'-0"X12"	(6) #5	
F3	5'-6"X5'-6"X12"	(6) #5	

HTG architects

www.htg-architects.com
Minneapolis Bismarck

1010 Mainstreet, Suite 100
Hopkins, MN 55343
Tel: 952.278.8880

PROJECT

MAYO EMPLOYEES FEDERAL CREDIT UNION

NEW BUILDING

605 WEST AVE S.
LA CROSSE, WI

ISSUED SET 3/27/2026

REVISIONS

DATE	NO	

WISCONSIN MICHAEL J VAN DE RIET 48987-6 MINNEAPOLIS, MN PROFESSIONAL ENGINEER

3/27/2026

ISS PA vd SSI INNOVATIVE STRUCTURAL SOLUTIONS, P.A.
5279 Kyler Avenue NE Albertville MN 55301
Phone: 763.425.9960 ■ www.isseng.com

FOUNDATION PLAN

Drawn By: JMW Checked By: BRP

S1.1

70026

COPYRIGHT © HTG ARCHITECTS

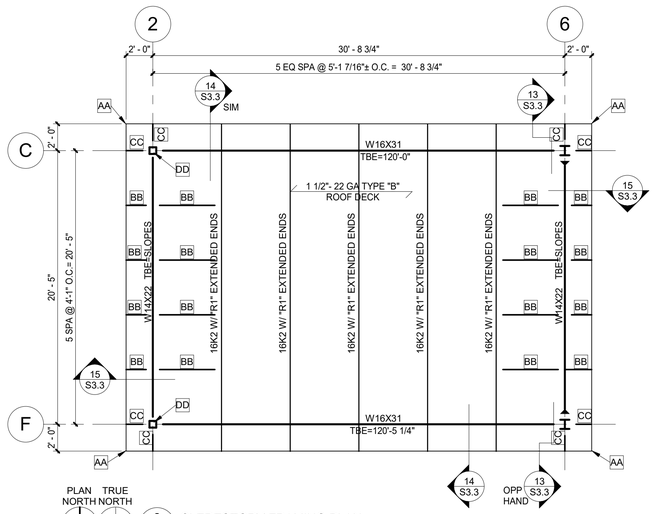

2 S2.1 CLERESTORY FRAMING PLAN
3/16" = 1'-0"

CLERESTORY FRAMING PLAN NOTES:

1. SEE THIS SHEET FOR TYPICAL ROOF FRAMING PLAN NOTES.
2. DECK FASTENING AT HIGH ROOF SHALL BE (DF1).

CLERESTORY FRAMING KEYNOTES:

AA MITER CUT ANGLES AT CORNER AND FIELD WELD TOGETHER WITH 3/16" FILLET WELDS ALL AROUND.

BB L5X3X1/4 LLV.

CC HSS5X5X1/4 OUTRIGGER (SLOPE/ROTATE TO MATCH ROOF SLOPE), SHOP WELD TO STEEL COLUMN WITH 3/16" FILLED WELDS ALL AROUND.

DD EXTEND COLUMN TO HIGHEST BEAM ELEVATION. PROVIDE 1/2"X6"X6" CAP PLATE, SHOP WELD TO STEEL COLUMN WITH 1/4" BEVEL WELDS ALL AROUND.

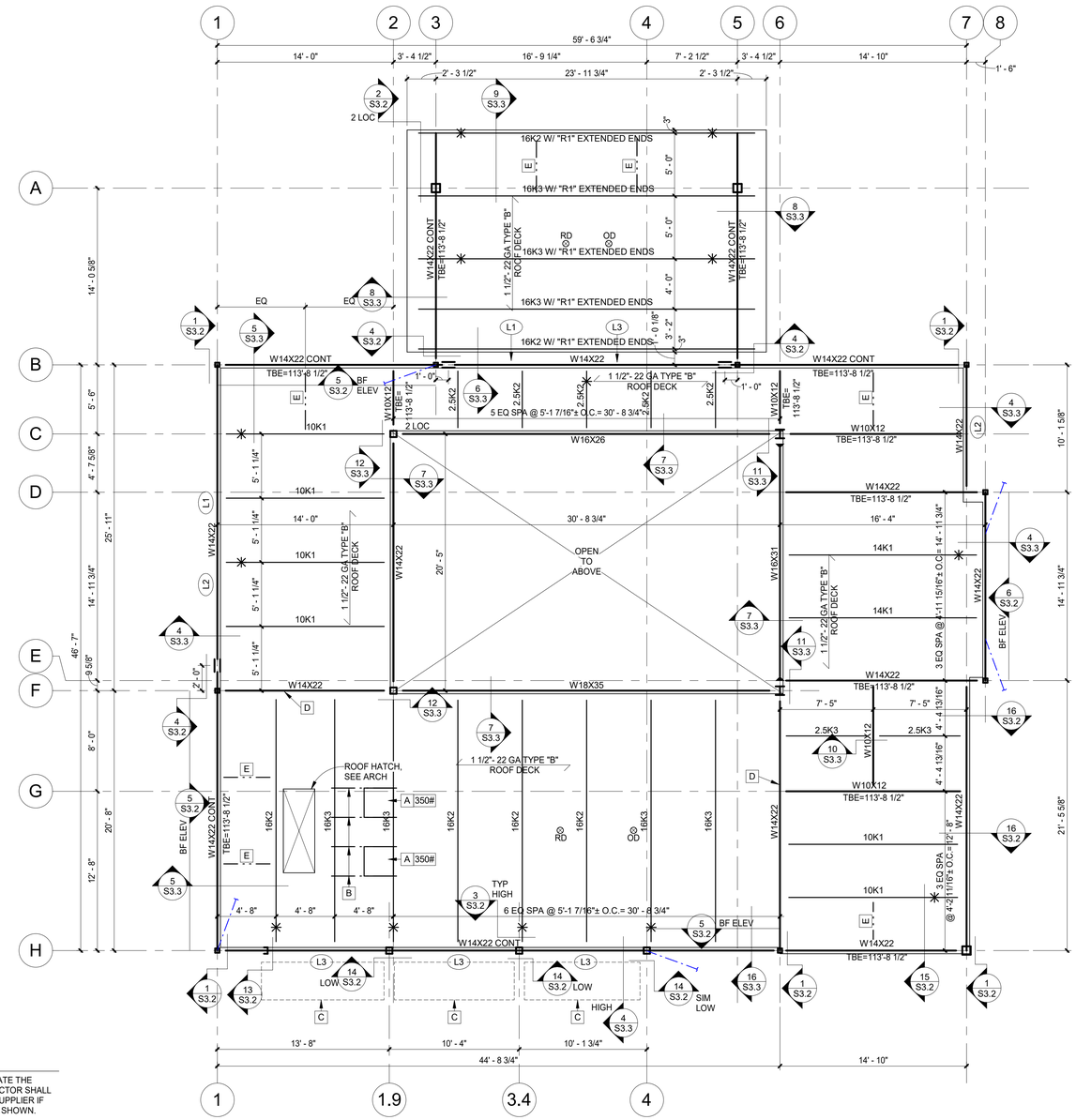

1 S2.1 ROOF FRAMING PLAN
3/16" = 1'-0"

ROOF FRAMING PLAN NOTES:

1. SEE FOUNDATION PLAN FOR COLUMN SCHEDULE.
2. VERIFY ALL DIMENSIONS WITH ARCHITECTURAL DRAWINGS.
3. TOP OF BEAM ELEVATION (TBE) = 113'-6" UNO ON PLAN OR IN SECTIONS..
4. SEE DETAIL 1/S3.3 FOR HANGER REQUIREMENTS AT STEEL JOISTS.
5. SEE DETAIL 2/S3.3 FOR ROOF OPENING SUPPORT FRAME DETAIL AT ROOF OPENINGS (INCLUDING ROOF HATCHES, DRAINS AND MECHANICAL OPENINGS (MO)).
6. SEE DETAIL 3/S3.3 FOR MECHANICAL UNIT SUPPORT DETAIL.
7. ✳ ON PLAN DENOTES JOIST BOTTOM CHORD ANGLE EXTENSION TO BEAM BOTTOM FLANGE. SEE 10/S3.3. JOIST SUPPLIER SHALL CHECK JOIST BOTTOM CHORD FOR 2K AXIAL FORCE.
8. DESIGN ROOF JOISTS FOR A NET SERVICE UPLIFT OF 10 PSF.
9. (DF-) ON PLAN DENOTES ROOF DECK FASTENING. SEE ROOF DECK FASTENING SCHEDULE ON THIS SHEET.
10. ROOF DECK FASTENING SHALL BE (DF1) UNO ON PLAN.
11. (L-) ON PLAN DENOTES LINTEL. SEE LINTEL SCHEDULE ON THIS SHEET.

ROOF FRAMING KEYNOTES:

A MECHANICAL UNIT WEIGHTS AND SIZES SHOWN ON PLAN INDICATE THE MAXIMUM WEIGHT AND SIZE PERMITTED. MECHANICAL CONTRACTOR SHALL NOTIFY ENGINEER OF RECORD AND COORDINATE WITH JOIST SUPPLIER IF ANY UNIT WEIGHTS, SIZES OR LOCATIONS DIFFER FROM THOSE SHOWN.

B MECHANICAL UNIT SUPPORT CHANNEL. SEE 3/S3.3.

C SUNSHADE AND CONNECTION TO STRUCTURAL STEEL FRAMING BY OTHERS, SEE ARCH.

D AT DECK DIRECTION TRANSITION, PROVIDE CONTINUOUS WT3X4.5, FIELD WELD TO ROOF JOISTS WITH 3/16" FILLET WELDS EACH SIDE. PROVIDE HSS2 1/2X2 1/2X3/16 X 5" SHIMS AS REQUIRED TO SUPPORT ENDS OF WT3X4.5.

E ANGLE KICKERS, SEE SECTIONS.

LINTEL SCHEDULE

MARK	REFERENCE	MEMBER	REMARKS
L1	---	L4X4X3/8	
L2	---	L7X4X3/8 LLV	
L3	11/S3.2	L7X4X3/8 LLV + HSS8X2X3/16 LSV	

LINTEL SCHEDULE NOTES:

1. VERIFY ALL SPANS OF OPENINGS AND WALL THICKNESSES WITH ARCH DRAWINGS. NOTIFY ARCHITECT/ENGINEER OF DEVIATIONS PRIOR TO FABRICATION AND ERECTION.
2. LOOSE BRICK LINTELS SHALL BE HOT DIP GALVANIZED AND SHALL BEAR 6" MINIMUM AT EACH END OF OPENING.

ROOF DECK FASTENING SCHEDULE

MARK	FASTENING OPTION	TYPICAL FASTENING	PERIMETER FASTENING	SIDELAP CONNECTION
(DF1)	WELDED OPTION	5/8"Ø PUDDLE WELDS W/ 36/4 PATTERN	5/8"Ø PUDDLE WELDS @ 6" O.C.	(1) #10 TEK SCREWS AT MID-SPAN BTWN SUPPORTS
	MECHANICAL FASTENER OPTION	HILTI PAF FASTENERS W/ 36/4 PATTERN (SEE NOTE #1)	HILTI PAF FASTENERS @ 6" O.C. (SEE NOTE #1)	(1) HILTI SLC SCREW AT MID-SPAN BTWN SUPPORTS (SEE NOTE #2)

ROOF DECK FASTENING SCHEDULE NOTES:

1. HILTI PAF FASTENERS SHALL BE HILTI X-HSN 24. IF THE BASE STEEL THICKNESS IS GREATER THAN 3/8", USE ENP-19 FASTENERS IN LIEU OF X-HSN 24.
2. HILTI SLC SCREWS SHALL BE S-SLC 01 M HWH OR S-SLC 02 M HWH SCREWS.

HTG architects
www.htg-architects.com
Minneapolis Bismarck
1010 Mainstreet, Suite 100
Hopkins, MN 55343
Tel: 952.278.8880

PROJECT

MAYO EMPLOYEES FEDERAL CREDIT UNION

NEW BUILDING

605 WEST AVE S.
LA CROSLE, WI

ISSUED SET 3/27/2026
REVISIONS
DATE NO

WISCONSIN MICHAEL J VAN DE RIET 48987-6 MINNEAPOLIS, MN PROFESSIONAL ENGINEER
3/27/2026

ISS PA INNOVATIVE STRUCTURAL SOLUTIONS, P.A.
5279 Kyler Avenue NE Albertville MN 55301
Phone: 763.425.9960 ■ www.isseng.com

ROOF FRAMING PLAN

Drawn By: JMW Checked By: BRP

S2.1

70026

COPYRIGHT © HTG ARCHITECTS

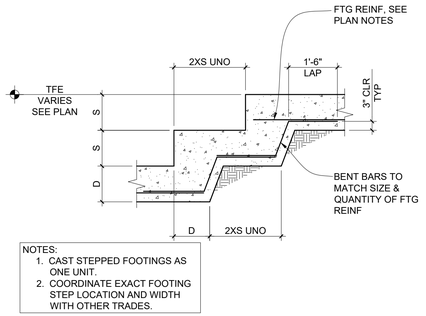

1 SECTION
S3.1 STEPPED FTG NO SCALE

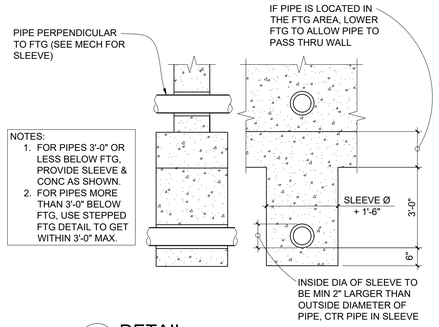

2 DETAIL
S3.1 WALL FTG @ UNDERGROUND LINES NO SCALE

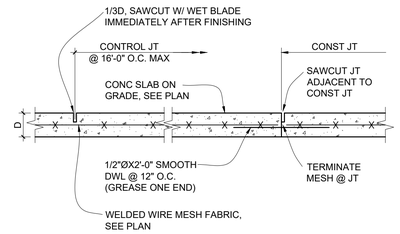

3 SECTION
S3.1 TYP CONTROL/CONST JT NO SCALE

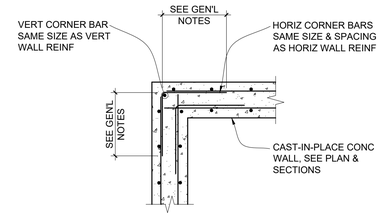

4 PLAN DETAIL
S3.1 TYP WALL CORNER 1/2"=1'-0"

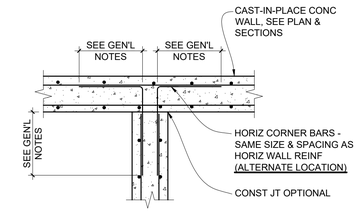

5 PLAN DETAIL
S3.1 TYP WALL INTERSECTION 1/2"=1'-0"

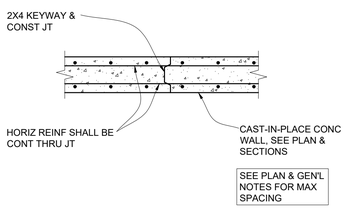

6 PLAN DETAIL
S3.1 WALL CONSTRUCTION JOINT 1/2"=1'-0"

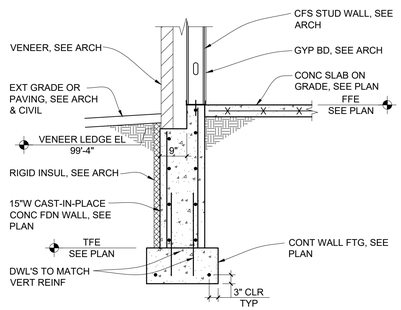

7 SECTION
S3.1 TYP FDN WALL @ VENEER 1/2"=1'-0"

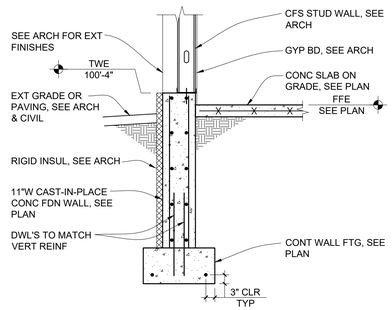

8 SECTION
S3.1 TYP FDN WALL @ METAL PANEL 1/2"=1'-0"

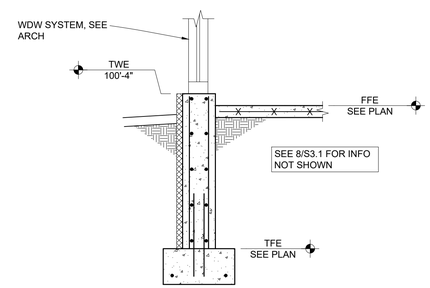

9 SECTION
S3.1 FDN WALL @ WDW SYSTEM 1/2"=1'-0"

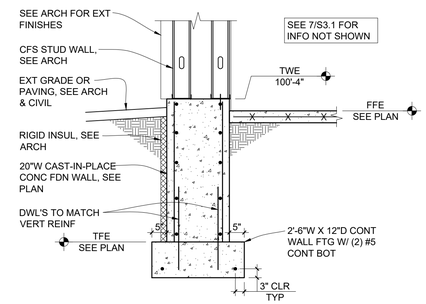

10 SECTION
S3.1 FDN WALL @ DBL WALL 1/2"=1'-0"

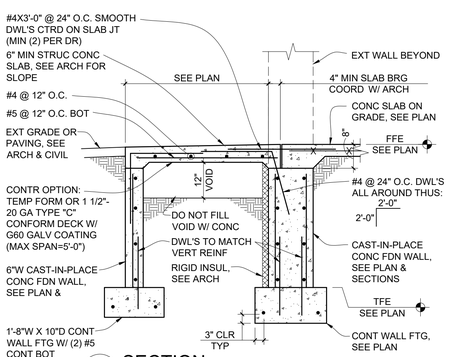

11 SECTION
S3.1 TYP EXT STRUC CONC SLAB 1/2"=1'-0"

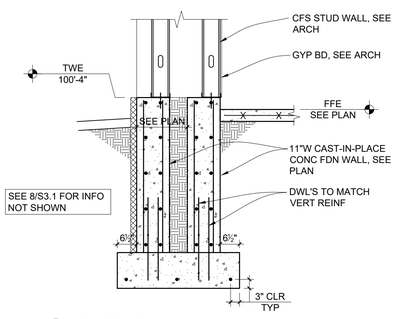

12 SECTION
S3.1 TYP FDN WALL @ SIGN WALL 1/2"=1'-0"

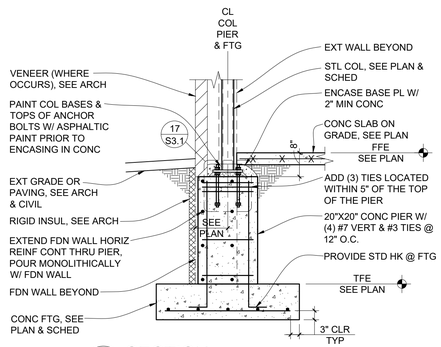

13 SECTION
S3.1 EXT STL COL, PIER & FTG 1/2"=1'-0"

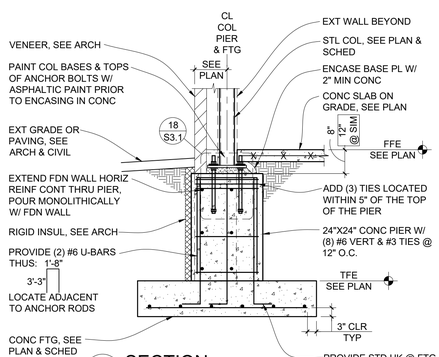

14 SECTION
S3.1 EXT STL COL, FTG & PIER 1/2"=1'-0"

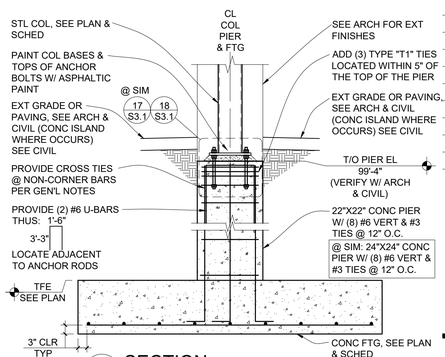

15 SECTION
S3.1 EXT STL COL, PIER & FTG 1/2"=1'-0"

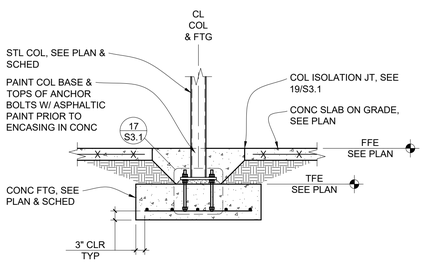

16 SECTION
S3.1 INT STL COL & FTG 1/2"=1'-0"

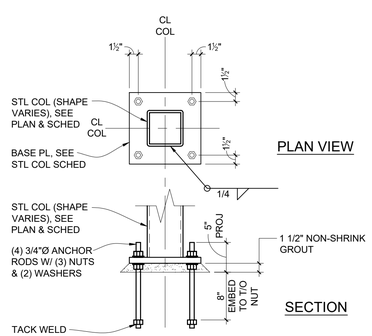

17 DETAIL
S3.1 ANCHOR ROD SETTING 1"=1'-0"

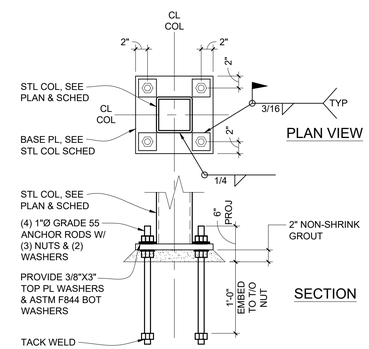

18 DETAIL
S3.1 ANCHOR ROD SETTING 1"=1'-0"

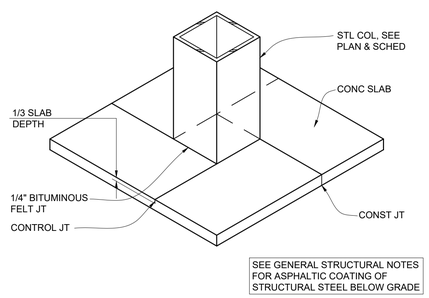

19 DETAIL
S3.1 TYP COL ISOLATION JT NO SCALE

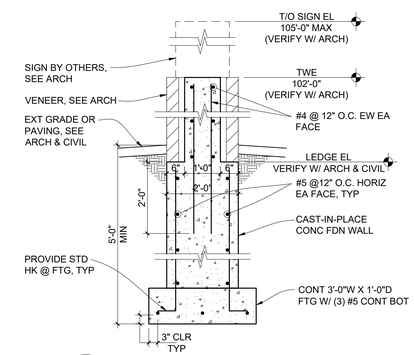

20 SECTION
S3.1 MONUMENT SIGN FDN 1/2"=1'-0"

HTG architects

www.htg-architects.com
Minneapolis Bismarck

1010 Mainstreet, Suite 100
Hopkins, MN 55343
Tel: 952.278.8880

PROJECT

MAYO EMPLOYEES FEDERAL CREDIT UNION

NEW BUILDING

605 WEST AVE S.
LA CROSSE, WI

ISSUED SET	3/27/2026
REVISIONS	
DATE	NO

WISCONSIN MICHAEL J VAN DE RIET 48987-6 MINNEAPOLIS, MN PROFESSIONAL ENGINEER

3/27/2026

ISS PA INNOVATIVE STRUCTURAL SOLUTIONS, P.A.
5279 Kyler Avenue NE Albertville MN 55301
Phone: 763.425.9960 ■ www.isseng.com

SECTIONS AND DETAILS

Drawn By: JMW Checked By: BRP

S3.1

70026

COPYRIGHT © HTG ARCHITECTS

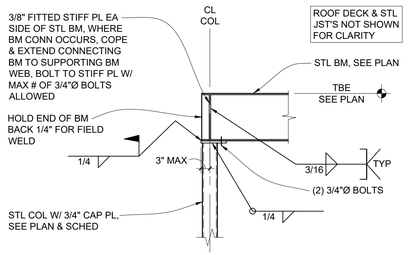

1 S3.2 SECTION
STL BM TO COL CONN 1/2"=1'-0"

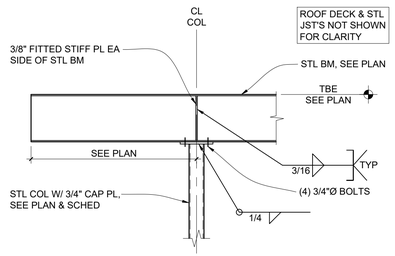

2 S3.2 SECTION
STL BM TO COL CONN 1/2"=1'-0"

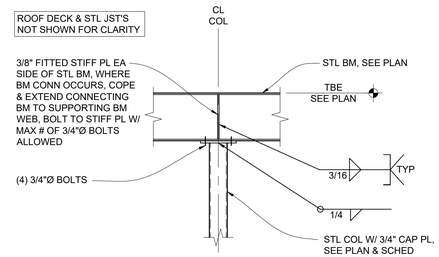

3 S3.2 SECTION
STL BM TO COL CONN 1/2"=1'-0"

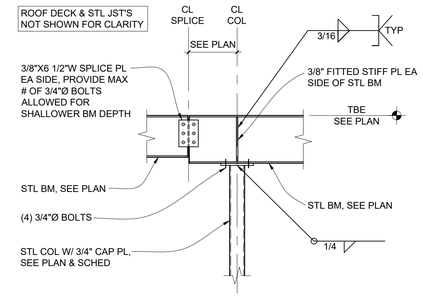

4 S3.2 SECTION
STL BM TO COL CONN & BM SPLICE 1/2"=1'-0"

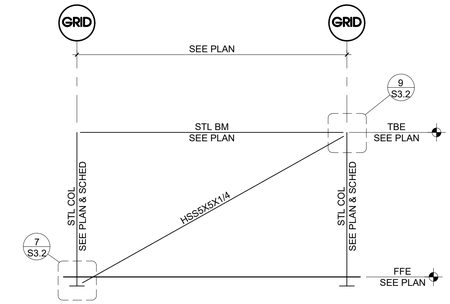

5 S3.2 ELEVATION
BRACED FRAME NO SCALE

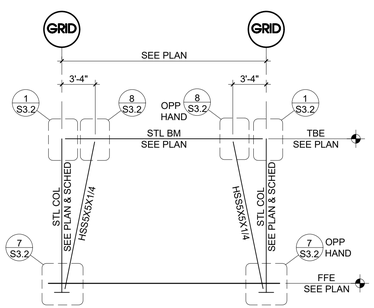

6 S3.2 ELEVATION
BRACED FRAME NO SCALE

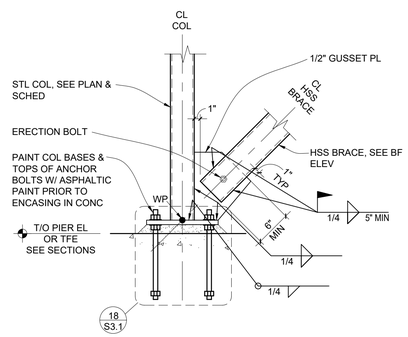

7 S3.2 DETAIL
BRACED FRAME CONN @ BASE 1"=1'-0"

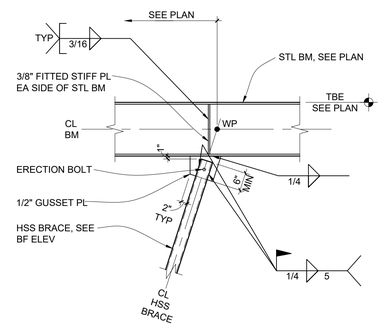

8 S3.2 DETAIL
BRACED FRAME CONN 1/2"=1'-0"

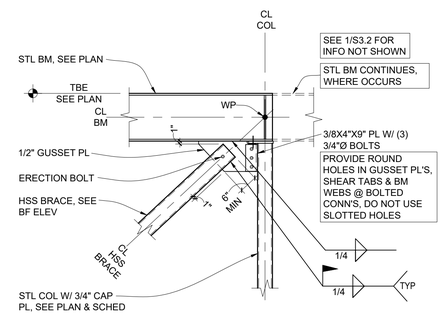

9 S3.2 DETAIL
BRACED FRAME CONN 1/2"=1'-0"

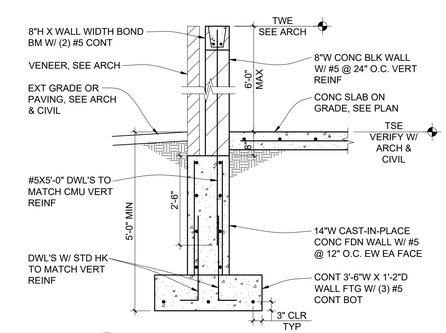

10 S3.2 SECTION
TRASH ENCLOSURE WALL 1/2"=1'-0"

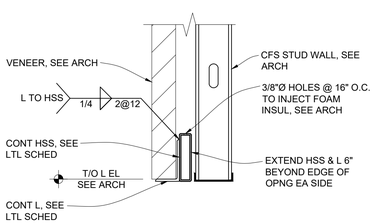

11 S3.2 SECTION
BRICK LTL 1"=1'-0"

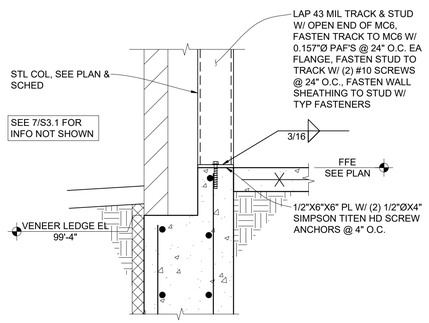

12 S3.2 SECTION
SUNSHADE SUPPORT COL TO FDN WALL CONN 1"=1'-0"

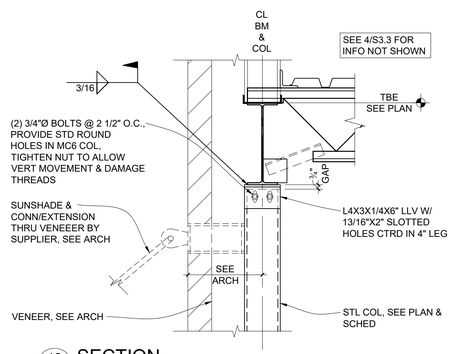

13 S3.2 SECTION
SUNSHADE SUPPORT @ POST 1"=1'-0"

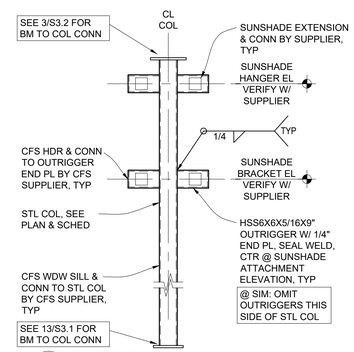

14 S3.2 SECTION
SUNSHADE @ STL COL 1/2"=1'-0"

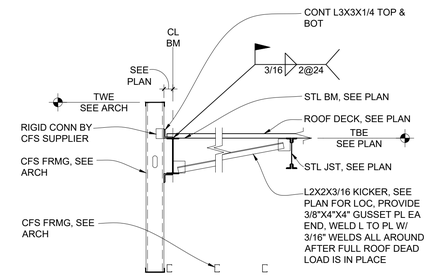

15 S3.2 SECTION
STL BM @ ROOF EDGE 1/2"=1'-0"

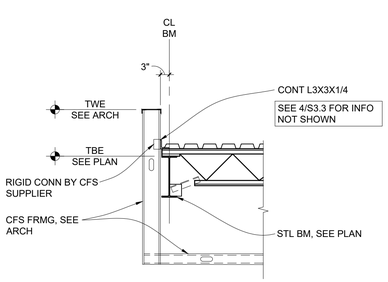

16 S3.2 SECTION
STL JST BRG @ STL BM 1/2"=1'-0"

HTG architects
www.htg-architects.com
Minneapolis Bismarck
1010 Mainstreet, Suite 100
Hopkins, MN 55343
Tel: 952.278.8880

PROJECT

MAYO EMPLOYEES FEDERAL CREDIT UNION

NEW BUILDING

605 WEST AVE S.
LA CROSSE, WI

ISSUED SET	3/27/2026
REVISIONS	
DATE	NO

WISCONSIN MICHAEL J VAN DE RIET 48987-6 MINNEAPOLIS, MN PROFESSIONAL ENGINEER

3/27/2026

ISS PA INNOVATIVE STRUCTURAL SOLUTIONS, P.A.
5279 Kyler Avenue NE Albertville MN 55301
Phone: 763.425.9960 ■ www.isseng.com

SECTIONS AND DETAILS

Drawn By: JMW Checked By: BRP

S3.2

70026

COPYRIGHT © HTG ARCHITECTS

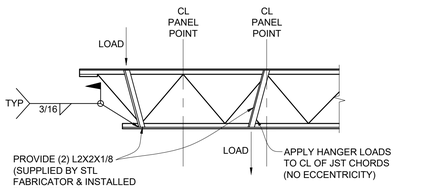

NOTES:
1. (2) L2X2X1/8 MAY BE OMITTED @ HANGER LOADS LESS THAN 100# OR WHERE THE SUM OF HANGER LOADS WITHIN A CHORD PANEL (BTWN TWO PANEL POINTS) DOES NOT EXCEED 100#.
2. NOTIFY ENGINEER IF THE SUM OF HANGER LOADS TO A SINGLE JST IS TO EXCEED 250#

1 S3.3 DETAIL
HANGER REQ'S @ STL JST'S — NO SCALE

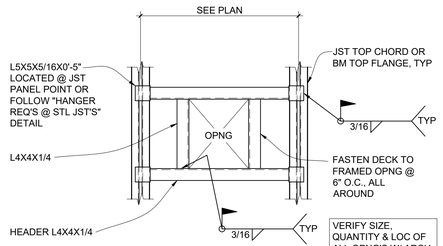

VERIFY SIZE, QUANTITY & LOC OF ALL OPNG'S W/ ARCH, MECH & ELEC PRIOR TO FABRICATION

2 S3.3 PLAN DETAIL
ROOF OPNG SUPPORT FRAME — NO SCALE

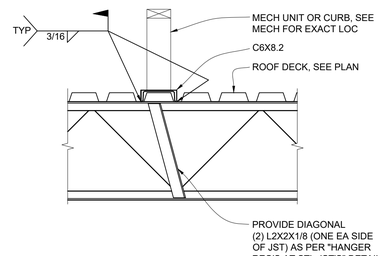

3 S3.3 DETAIL
MECH UNIT SUPPORT — NO SCALE

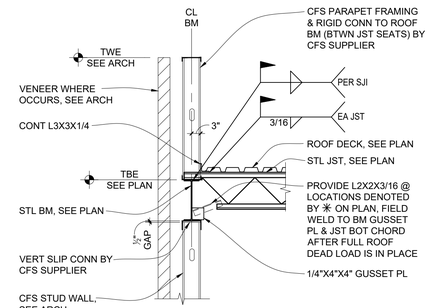

4 S3.3 SECTION
STL JST BRG @ STL BM — 1/2"=1'-0"

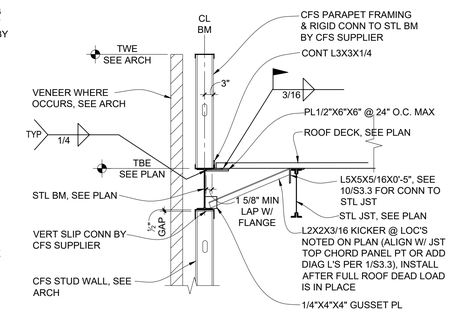

5 S3.3 SECTION
DECK BRG @ STL BM — 1/2"=1'-0"

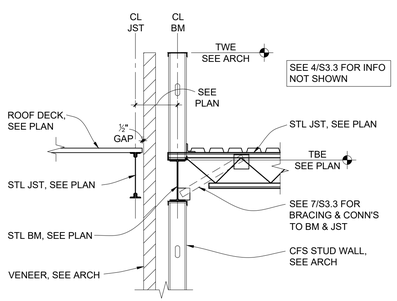

6 S3.3 SECTION
CANOPY EDGE @ EXT WALL — 1/2"=1'-0"

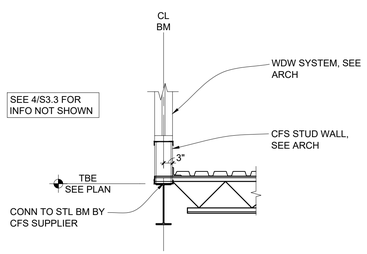

7 S3.3 SECTION
JST BRG @ CLERESTORY — 1/2"=1'-0"

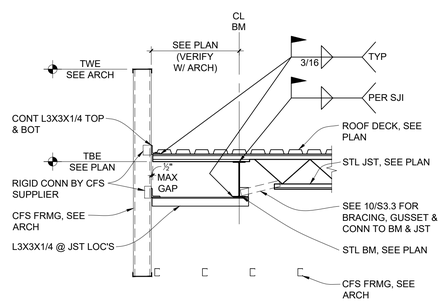

8 S3.3 SECTION
STL JST BRG W/ EXTENDED END @ STL BM — 1/2"=1'-0"

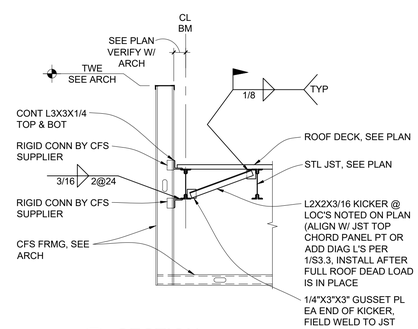

9 S3.3 SECTION
ROOF DECK BRG @ STL JST — 1/2"=1'-0"

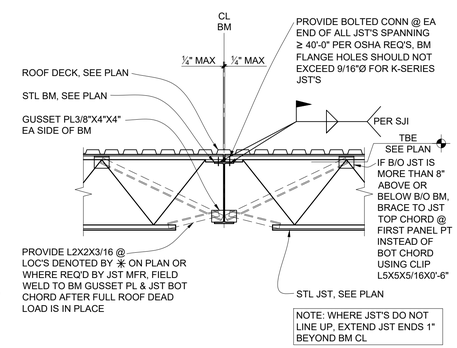

NOTE: WHERE JST'S DO NOT LINE UP, EXTEND JST ENDS 1" BEYOND BM CL

10 S3.3 SECTION
STL JST BRG @ STL BM — 1/2"=1'-0"

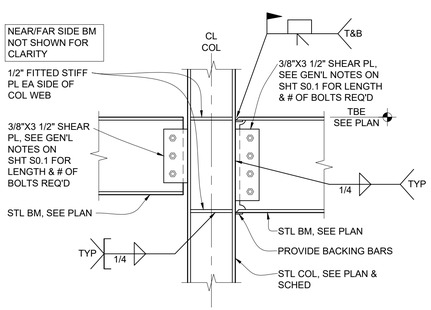

11 S3.3 SECTION
WIDE FLANGE COL MOMENT CONN — 1"=1'-0"

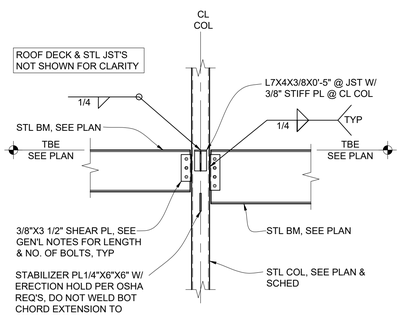

12 S3.3 SECTION
STL BM TO COL CONN — 1/2"=1'-0"

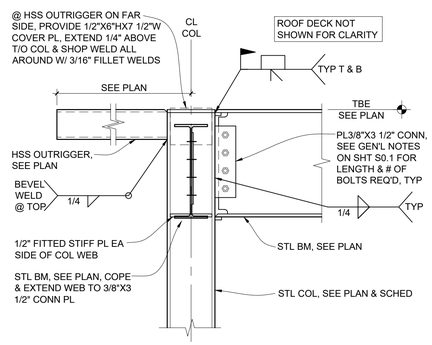

13 S3.3 SECTION
WIDE FLANGE COL MOMENT CONN — 1"=1'-0"

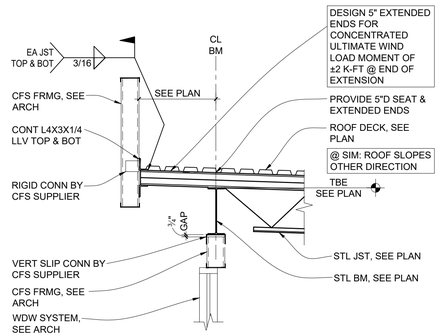

14 S3.3 SECTION
STL JST BRG @ STL BM — 1/2"=1'-0"

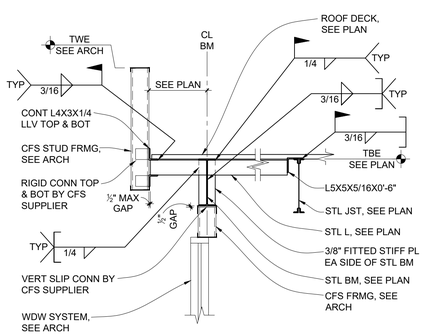

15 S3.3 SECTION
ANGLE OUTRIGGER @ STL BM — 1/2"=1'-0"

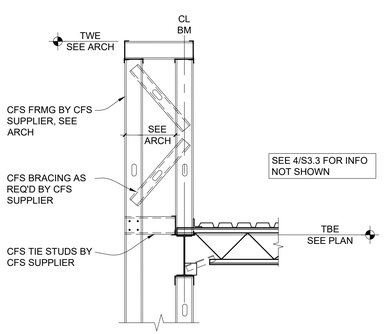

16 S3.3 SECTION
STL JST BRG @ STL BM @ TALL PARPAET — 1/2"=1'-0"

HTG architects
www.htg-architects.com
Minneapolis Bismarck
1010 Mainstreet, Suite 100
Hopkins, MN 55343
Tel: 952.278.8880

PROJECT

MAYO EMPLOYEES FEDERAL CREDIT UNION

NEW BUILDING

605 WEST AVE S.
LA CROSSE, WI

ISSUED SET	3/27/2026
REVISIONS	
DATE	NO

WISCONSIN MICHAEL J VAN DE RIET 48987-6 MINNEAPOLIS, MN PROFESSIONAL ENGINEER

3/27/2026

ISS PA INNOVATIVE STRUCTURAL SOLUTIONS, P.A.
5279 Kyler Avenue NE Albertville MN 55301
Phone: 763.425.9960 ■ www.isseng.com

SECTIONS AND DETAILS

Drawn By: JMW — Checked By: BRP

S3.3

70026

COPYRIGHT © HTG ARCHITECTS

MECHANICAL ABBREVIATIONS

AD	AREA DRAIN
AFF	ABOVE FINISHED FLOOR
AFMS	AIRFLOW MEASURING STATION
AHU	AIR HANDLING UNIT
ALT	ALTERNATE
AP	ACCESS PANEL(S)
APD	AIR PRESSURE DROP
ARCH	ARCHITECT(URAL)
AS	AIR SEPARATOR
BHP	BRAKE HORSEPOWER
BLDG	BUILDING
BLR	BOILER
BOD	BOTTOM OF DUCT
BTUH	BRITISH THERMAL UNIT PER HOUR
BWV	BACK WATER VALVE
CA	COMBUSTION AIR
CD	CONDENSATE DRAIN
CFH	CUBIC FEET PER HOUR
CFM	CUBIC FEET PER MINUTE
CHW	CIRCULATING HOT WATER
CLG	CEILING
CLR	CORE LOOP WATER RETURN
CLS	CORE LOOP WATER SUPPLY
CO	CLEAN OUT
COND	CONDENS(ATE) (ER)
CONN	CONNECTION
CONT	CONTINU(E) (OUS) (ED) (ATION)
CONTR	CONTRACTOR
CP	CIRCULATING PUMP
CR	CONDENSER RETURN
CRU	COMPUTER ROOM UNIT
CS	CONDENSER SUPPLY
CTE	CONNECT TO EXISTING
CU	CONDENSING UNIT
CUH	CABINET UNIT HEATER
CW	COLD WATER
CWR	CHILLER WATER RETURN
CWS	CHILLED WATER SUPPLY
DEG	DEGREE(S)
DH	DUCT HEATER
DIFF	DIFFUSER
DN	DOWN
DT	DRAIN TILE
DWG	DRAWING
EA	EXHAUST AIR
EAT	ENTERING AIR TEMPERATURE
EC	ELECTRICAL CONTRACTOR
EF	EXHAUST FAN
EHC	ELECTRIC HEATING COIL
EL	ELEVATION
ERU	ENERGY RECOVERY UNIT
ESP	EXTERNAL STATIC PRESSURE
ET	EXPANSION TANK
EUH	ELECTRIC UNIT HEATER
EWC	ELECTRIC WATER COOLER
EWH	ELECTRIC WATER HEATER
EWT	ENTERING WATER TEMPERATURE
EXH	EXHAUST
EXIST	EXISTING
F	FAHRENHEIT
FBO	FURNISHED BY OTHERS
FCO	FLOOR CLEAN OUT
FCU	FAN COIL UNIT
FD	FLOOR DRAIN
FD	FIRE DAMPER
FDC	FIRE DEPARTMENT CONNECTION
FDV	FIRE DEPARTMENT VALVE
FFD	FUNNEL FLOOR DRAIN
FFE	FINISHED FLOOR ELEVATION
FLR	FLOOR
FPM	FEET PER MINUTE
FS	FLOOR SINK
FT	FOOT, FEET
FTR	FINNED TUBE RADIATION
G	GAS
GA	GAUGE
GAL	GALLON
GC	GENERAL CONTRACTOR
GI	GREASE INTERCEPTOR
GPH	GALLON(S) PER HOUR
GPM	GALLON(S) PER MINUTE
GR	GRILLE
GW	GREASE WASTE (SANITARY)
H	HARD WATER
H-STAT	HUMIDISTAT
HB	HOSE BIBB
HOA	HAND-OFF-AUTO SWITCH
HP	HORSEPOWER
HP	HEAT PUMP
HTG	HEATING
HVAC	HEATING, VENTILATING, AND AIR CONDITIONING
HW	HOT WATER
HWR	HOT WATER RETURN
HWS	HOT WATER SUPPLY
ID	INDIRECT DRAIN
IE	INVERT ELEVATION
IN	INCHES)
INSUL	INSULATION
INV	INVERT
INV EL	INVERT ELEVATION
IRR	IRRIGATION WATER

MECHANICAL ABBREVIATIONS

L	LIQUID
LAT	LEAVING AIR TEMPERATURE
LAV	LAVATORY
LBS/HR	POUNDS PER HOUR
LF	LINEAL FOOT, FEET
LTA	LINED TRANSFER AIR
LV	LOUVER
LWT	LEAVING WATER TEMPERATURE
MAU	MAKEUP AIR UNIT
MAX	MAXIMUM
MB	MOP BASIN
MBH	1,000 BTUH
MC	MECHANICAL CONTRACTOR
MCC	MOTOR CONTROL CENTER
MEZZ	MEZZANINE
MIN	MINIMUM
MISC	MISCELLANEOUS
#	NUMBER
N/A	NOT APPLICABLE
NC	NORMALLY CLOSED
NIC	NOT IN CONTRACT
NO	NORMALLY OPEN
NTS	NOT TO SCALE
OA	OUTSIDE AIR
OC	ON CENTER
ORD	OVERFLOW ROOF DRAIN
OSD	OVERFLOW STORM DRAIN
PC	PLUMBING CONTRACTOR
PD	PRESSURE DROP
PG	PRESSURE GAUGE
PLBG	PLUMBING
PRV	POWER ROOF VENTILATOR
PRV	PRESSURE REDUCING VALVE
PRV	PRESSURE REGULATING VALVE
PSI	POUNDS PER SQUARE INCH
PT	PRESSURE AND TEMPERATURE FITTING
RA	RETURN AIR
RCP	REFLECTED CEILING PLAN
RD	ROOF DRAIN
REG	REGISTER
REQ	REQUIRED
RF	RETURN FAN
RH	RELATIVE HUMIDITY
RHC	REHEAT COIL
RL	REFRIGERANT LIQUID
RM	ROOM
RO	REVERSE OSMOSIS
RP	RADIANT PANEL
RPM	REVOLUTIONS PER MINUTE
RPZ	REDUCED PRESSURE BACKFLOW PREVENTER
RS	REFRIGERANT SUCTION
RTU	ROOFTOP UNIT
RWL	RAIN WATER LEADER
S	SUCTION
SA	SUPPLY AIR
SAN	SANITARY
SCCR	SHORT CIRCUIT CURRENT RATING
SCU	SELF CONTAINED UNIT
SCW	SOFTENED COLD WATER
SD	STORM DRAIN
SE	SEWAGE EJECTOR
SF	SUPPLY FAN, SQUARE FEET
SH	SHOWER
SP	STATIC PRESSURE, SUMP PUMP
SR	SUCTION RISER
SS	STAINLESS STEEL
ST	STORM
STM	STEAM
STP	STANDPIPE
SU	SUPPLY UNIT
T	THERMOSTAT, TEMPERED
T-STAT	THERMOSTAT
TA	TRANSFER AIR
TC	TEMPERATURE CONTROL(S)
TCC	TEMPERATURE CONTROL(S) CONTRACTOR
TD	TEMPERATURE DIFFERENTIAL
TMV	THERMOSTATIC MIXING VALVE
TSP	TOTAL STATIC PRESSURE
TYP	TYPICAL
UG	UNDERGROUND
UH	UNIT HEATER
UNO	UNLESS NOTED OTHERWISE
UR	URINAL
V	VENT
VAV	VARIABLE AIR VOLUME
VD	VOLUME DAMPER
VFD	VARIABLE FREQUENCY DRIVE
VSD	VARIABLE SPEED DRIVE (MOTOR CONTROLLER)
VTR	VENT THROUGH ROOF
W	WASTE
WC	WATER CLOSET
WCO	WALL CLEAN OUT
WH	WATER HEATER
WH	WALL HYDRANT
WP	WATERPROOF
WPD	WATER PRESSURE DROP
WS	WATER SOFTENER

MECHANICAL SYMBOL LEGEND

PLUMBING

- SCW — DOMESTIC COLD WATER (SOFT)
- H — DOMESTIC COLD WATER (HARD)
- FCW — DOMESTIC FILTERED COLD WATER
- CW-FF — DOMESTIC COLD WATER (FLUSHING FIXTURES)
- NP — DOMESTIC COLD WATER (NON-POTABLE)
- T — TEMPERED DOMESTIC HOT WATER
- HW — DOMESTIC HOT WATER
- CHW — RECIRCULATION HOT WATER
- 140°HW — DOMESTIC HOT WATER (140° F)
- 140°CHW — RECIRCULATION DOMESTIC HOT WATER (140° F)
- W — SANITARY WASTE / PUMPED (PW)
- GW — GREASE WASTE
- FW — FLAMMABLE WASTE
- V — VENT
- AW — SANITARY WASTE (ACID)
- AV — VENT (ACID)
- SD — STORM DRAIN (PRIMARY) / PUMPED (PSD)
- OSD — OVERFLOW STORM DRAIN (OVERFLOW)
- DT — DRAIN TILE
- POOL — POOL DRAINAGE
- G — NATURAL GAS
- LPG — LIQUID PROPANE GAS
- CD — CONDENSATE DRAIN PIPING
- CA — COMPRESSED AIR
- R## — PLUMBING RISER TAG

HEATING & COOLING

- G — NATURAL GAS
- HWS — HEATING WATER SUPPLY
- HWR — HEATING WATER RETURN
- CWS — CHILLED WATER SUPPLY
- CWR — CHILLED WATER RETURN
- CLS — CORE LOOP SUPPLY
- CLR — CORE LOOP RETURN
- STM — STEAM
- CR — CONDENSATE RETURN
- CD — CONDENSATE DRAIN PIPING
- RL — REFRIGERANT LIQUID
- RS — REFRIGERANT SUCTION

MEDICAL GAS

- N2O — NITROUS OXIDE
- O2 — OXYGEN
- VAC — VACUUM
- WAGD — WASTE / ANESTHESIA GAS DISPOSAL

REFRIGERATION

- LT — LOW TEMPERATURE LOOP
- MT — MEDIUM TEMPERATURE LOOP
- GLY — GLYCOL
- RHS — HIGH SIDE TO GAS COOLER & HEAT RECLAIM
- RED — EVAPORATOR DRAIN

MISC. REFRIGERATION

- E — ELECTRONIC EPR
- CC — CASE CONTROLLER PER COIL/CASE
- L — LIQUID LINE SOLENOID
- HUB — RDM MERCURY HUB PER CIRCUIT
- S — CASE/COOLER TEMP. SENSOR
- DT — DEFROST TERMINATION
- CO — CASE REFRIGERATION CONNECTION
- STUB — REFRIGERATION STUB-UP
- ## — REFRIGERATION CIRCUIT/SYSTEM NUMBER
- X## — REFRIGERATION EQUIPMENT

MISC. PIPING

- A — AQUASTAT
- PS — PRESSURE SWITCH
- FS — FLOW SWITCH
- TEMPERATURE GAUGE
- SENSOR TAP
- WATER HAMMER ARRESTOR
- PRESSURE GAUGE WITH ISOLATION VALVE
- OR — IN-LINE PUMP
- ELBOW UP
- ELBOW DOWN
- TEE UP
- TEE-OFF BOTTOM / DOWN
- CLEANOUT - FLOOR (FCO)
- CO — CLEANOUT - CEILING (CO)
- PIPE CAP
- EXPANSION JOINT (LOOP)
- ECCENTRIC REDUCER
- PIPE ANCHOR
- CONCENTRIC REDUCER
- ALIGNMENT GUIDES
- FLEXIBLE CONNECTION
- CFM — CIRCUIT BALANCING VALVE
- CHECK VALVE
- STRAINER
- GATE VALVE
- STRAINER WITH BLOW DOWN
- GAS COCK VALVE
- PRESSURE REDUCING VALVE
- STOP & WASTE VALVE
- PRESSURE RELIEF VALVE
- BALL VALVE
- GPM — FLOW MEASURING STATION
- BUTTERFLY/SHUT-OFF VALVE
- FLOW LIMITING VALVE
- GLOBE VALVE
- SOLENOID VALVE
- CONTROL VALVE (2-WAY)
- CONTROL VALVE (3-WAY)
- GLOBE ANGLED VALVE
- DRAIN VALVE
- BFP — BACKFLOW PREVENTER
- A — AIR VENT - AUTOMATIC
- BWV — BACKWATER VALVE
- M — AIR VENT - MANUAL
- GAS PRESSURE REGULATOR
- FS — FLOW SWITCH
- FLOW DIRECTION
- HOPPER DRAIN / FLOOR SINK
- PIPE PITCH DIRECTION
- FLOOR DRAIN
- PIPE UNION
- WH — HYDRANT (WALL, ROOF, YARD)
- THERMOMETER
- HB — HOSE BIBB
- DSN — DOWNSPOUT NOZZLE W/COVER
- DSN — DOWNSPOUT NOZZLE

FIRE PROTECTION

- FW — FIRE PROTECTION (WET)
- FD — FIRE PROTECTION (DRY)
- FPA — FIRE PROTECTION (PRE-ACTION)
- FW FDC — FIRE PROTECTION (WET) - FIRE DEPT. CONN.
- FW SP — FIRE PROTECTION (WET) - STANDPIPE
- FW Z# — FIRE PROTECTION (WET) - ZONE #

SPRINKLER HEADS

- RECESSED WHITE PENDANT HEAD W/ WHITE ESCUTCHEON CUP
- CONCEALED WHITE PENDANT HEAD W/ WHITE DISC
- UPRIGHT BRASS HEAD ON EXPOSED PIPING
- UPRIGHT WHITE HEAD ON EXPOSED PIPING
- CHROME SIDEWALL HEAD W/ CHROME WALL FLANGE
- CHROME EXTENDED THROW HEADS W/ CHROME WALL FLANGE
- CHROME EXTENDED THROW SIDEWALL HEADS W/ CHROME WALL FLANGE & HIGH-TEMP 200°F
- WHITE PENDANT HEAD. HEADS IN POOL SHALL BE A MANUFACTURED HEAD FOR CORROSIVE ENVIRONMENTS TO PREVENT RUSTING
- HIGH-TEMP (286°F) RECESSED WHITE PENDANT HEAD W/ WHITE ESCUTCHEON CUP

MISC. FIRE PROTECTION

- SIAMESE FIRE DEPARTMENT CONNECTION
- RPZ — RPZ VALVE (REDUCED PRESSURE BACKFLOW)
- OS & Y VALVE
- RPZ VALVE (REDUCED PRESSURE BACKFLOW)
- OS&Y VALVE WIRED

HVAC

- SA — SUPPLY AIR DUCT
- RA — RETURN AIR DUCT
- OA — OUTSIDE AIR DUCT
- TA — TRANSFER AIR DUCT
- CA — COMBUSTION AIR DUCT
- LTA — LINED TRANSFER AIR DUCT
- EA — EXHAUST AIR DUCT
- T — THERMOSTAT
- T S — THERMOSTAT SPLIT SYSTEM
- S — SPACE TEMPERATURE SENSOR
- T N — THERMOSTAT NIGHT SET BACK
- H — HUMIDISTAT
- T P — THERMOSTAT PROGRAMMABLE
- T H — COMB. TEMP. & HUM. SENSOR (INNOVENT)
- P — PRESSURE SENSOR
- C O — CARBON MONOXIDE SENSOR
- C — COMB. TEMP. & HUM. SENSOR
- N O2 — NITROGEN DIOXIDE SENSOR
- C O2 — CARBON DIOXIDE SENSOR
- V OC — VOLATILE ORGANIC COMPOUND SENSOR
- D — DIESEL SENSOR
- C O — CARBON MONOXIDE AND NITROGEN DIOXIDE SENSOR
- S OA — OUTSIDE AIR SENSOR
- W — WALL SWITCH
- M — MOTORIZED DAMPER
- FS — FIRE/SMOKE DAMPER
- LD — LOW-LEAK MOTORIZED DAMPER
- S — SMOKE DAMPER
- BD — BACKDRAFT DAMPER
- F — FIRE DAMPER
- ID — VOLUME DAMPER (IRIS CLOSURE)
- R — RADIATION DAMPER
- VOLUME DAMPER (MANUAL)
- SUPPLY AIR
- RO — VD (REMOTELY OPERATED)
- EXHAUST AIR
- AB — VD (AUTO BALANCE)
- RETURN/TRANSFER AIR
- CEILING SUPPLY DIFFUSER
- FLOOR REGISTER
- SUPPLY AIR REGISTER
- 4"x4" — LINEAR DIFFUSER
- RETURN AIR GRILLE / REGISTER
- FLEX DUCT
- EXHAUST AIR GRILLE / REGISTER
- ROOF (PRV) EXHAUST FAN
- RETURN AIR GRILLE / REGISTER W/ SOUND BOOT
- CABINET UNIT HEATER
- SIDEWALL SUPPLY REGISTER
- VARIABLE AIR VOLUME BOX
- SIDEWALL RETURN / EXHAUST GRILLE
- AFM — AIR FLOW MEASURING STATION
- AP — ACCESS PANEL
- AFS — AIR FLOW PRESSURE SWITCH
- SUPPLY DUCT ELBOW WITH TURNING VANES
- 14"x10" — STANDARD OR LINED DUCT (SUPPLY, RETURN, EXHAUST). DUCT IS LABELED TO INDICATE INTERNAL DUCT DIMENSION. SEE SPECIFICATION FOR INSULATION
- 14"x10" — DOUBLE WALL (SUPPLY, RETURN, EXHAUST). DUCT IS LABELED TO INDICATE INTERNAL DUCT DIMENSION.
- STANDARD ROUND TAKEOFF (CONICAL BELL MOUTH) WITH VOLUME DAMPER
- DUCT UP (SUPPLY)
- DUCT UP (RETURN/EXHAUST)
- DUCT DOWN (SUPPLY)
- DUCT DOWN (RETURN/EXHAUST)

DIFFUSER, REGISTER, GRILLE TAG

- A — 24x6 / 8ø — SIZES (INCHES) OR DIFFUSER NECK SIZE
- 450 — CFM
- TYP. 2 — QUANTITY OF DRG IN GENERAL AREA
- NOTE — MISC. NOTE / MOUNTING INFORMATION
- DRG TAG, SEE SCHEDULE

NOTE: SEE DIFFUSER, REGISTER, AND GRILLE SCHEDULE FOR FURTHER DETAILS

MISC. GRAPHICS

- BREAK IN MATERIAL (FOR VISUAL PURPOSES)
- UNDER CUT DOOR FOR AIR TRANSFER
- CONNECT TO EXISTING
- FINISHED FLOOR ELEVATION
- NEW AND TO BE REMOVED (DEMOLISHED)
- EXISTING TO REMAIN

MECHANICAL SHEET INDEX

M0.0	MECHANICAL TITLE SHEET
M0.1	MECHANICAL GENERAL NOTES & SITE PLAN
M1.1	MAIN LEVEL & BELOW FLOOR PLAN - PLUMBING
M2.1	MAIN LEVEL PLAN - HVAC
M3.1	MAIN LEVEL PLAN - PIPING
M4.1	ROOF PLAN - MECHANICAL
M5.1	PLUMBING RISER DIAGRAMS
M6.1	MECHANICAL DETAILS
M7.1	MECHANICAL SCHEDULES
M8.1	MECHANICAL CONTROLS

HTG architects

www.htg-architects.com
Minneapolis Bismarck

1010 Mainstreet, Suite 100
Hopkins, MN 55343
Tel: 952.278.8880

PROJECT

MAYO EMPLOYEES FEDERAL CREDIT UNION

NEW BUILDING

605 WEST AVE S.
LA CROSSE, WI

ISSUED SET 2026-03-27

REVISIONS

DATE	NO	

I hereby certify that this plan, specification or report was prepared by me or under my direct supervision and that I am a duly Licensed Professional Engineer under the laws of the state of Minnesota

Reg No. Date

emanuelson-podas consulting engineers

Emanuelson-Podas, Inc.
7705 Bush Lake Road
Edina, MN 55439

(952) 930-0050 | www.epinc.com

MECHANICAL TITLE SHEET

Drawn By: JM Checked By: JH

M0.0

3392.0002

COPYRIGHT © HTG ARCHITECTS

Autodesk Docs://3392.0002 Mayo EFCU - Lacrosse WI/Mayo EFCU_Lacrosse WI_MEP_2025.rvt

3/26/2026 9:20:54 PM

MECHANICAL PROJECT GENERAL NOTES

(NOTES APPLY TO ALL SHEETS)

1 WORK TO BE ACCOMPLISHED ON THESE DRAWINGS AND THE ACCOMPANYING SPECIFICATIONS INCLUDES THE FURNISHING OF ALL LABOR, MATERIALS, EQUIPMENT, AND SERVICES NECESSARY FOR THE PROPER COMPLETION OF ALL MECHANICAL WORK.

2 EXISTENCE OF ANY WIRES, CONDUITS, PIPES, DUCTS, OR OTHER FACILITIES ARE SHOWN IN A GENERAL WAY ONLY. IT WILL BE THE DUTY OF THE CONTRACTOR TO VISIT THE SITE AND MAKE EXACT DETERMINATION OF THE EXISTENCE OF ANY SUCH FACILITIES PRIOR TO THE SUBMISSION OF HIS BID. IT IS UNDERSTOOD THAT HE WILL BE RESPONSIBLE FOR MAKING THE EXACT DETERMINATION OF THE LOCATION AND CONDITION OF SUCH FACILITIES.

3 ALL REQUIRED FEES, PERMITS, AND INSPECTIONS SHALL BE OBTAINED AND/OR ARRANGED FOR BY THE CONTRACTOR UNDER THE SECTION OF THE SPECIFICATIONS FOR WHICH THEY ARE REQUIRED.

4 REGULAR INSPECTIONS SHALL BE ARRANGED BY THE CONTRACTOR AS REQUIRED BY ANY AND ALL REGULATIONS. ALL CHARGES FROM REGULATING AGENCIES FOR INSPECTIONS OF INSTALLATIONS OR REVIEW OF PLANS AND SPECIFICATIONS SHALL BE PAID BY THE CONTRACTOR.

5 CERTIFICATE OF FINAL INSPECTION. UNDER EACH APPLICABLE SECTION OF THE SPECIFICATIONS, CONTRACTOR SHALL, UPON COMPLETION OF THE WORK UNDER THAT SECTION, FURNISH A CERTIFICATE OF FINAL INSPECTION TO THE ENGINEER FROM THE INSPECTION DEPARTMENT HAVING JURISDICTION.

6 ALL MATERIALS AND WORKMANSHIP SHALL COMPLY WITH ALL CURRENT AND APPLICABLE CODES, SPECIFICATIONS, ORDINANCES, LAWS, REGULATIONS, INDUSTRY STANDARDS, AND UTILITY COMPANY REGULATIONS.

7 IN CASE OF DIFFERENCE AMONG BUILDING CODES, SPECIFICATIONS, STATE LAWS, LOCAL ORDINANCES, INDUSTRY STANDARDS, AND UTILITY COMPANY REGULATIONS AND THE CONTRACT DOCUMENTS, THE MOST STRINGENT SHALL GOVERN. CONTRACTOR SHALL PROMPTLY NOTIFY THE ENGINEER IN WRITING OF ANY SUCH DIFFERENCE.

8 ALL APPLICABLE FEDERAL, STATE, LOCAL LAWS, ORDINANCES, AND LOCAL CODE AMENDMENTS SHALL BE ADHERED TO THROUGHOUT THE CONSTRUCTION PROJECT. THE TOTAL INSTALLATION SHALL COMPLY WITH ANY AND ALL REQUIREMENTS OF THE LEGALLY CONSTITUTED AUTHORITIES HAVING JURISDICTION INCLUDING THE APPLICABLE BUILDING CODE, THE APPLICABLE MECHANICAL CODE, AND THE APPLICABLE PLUMBING CODE.

9 NON-COMPLIANCE. SHOULD THE CONTRACTOR PERFORM ANY WORK THAT DOES NOT COMPLY WITH THE REQUIREMENTS OF THE APPLICABLE BUILDING CODES, STATE LAWS, LOCAL ORDINANCES, INDUSTRY STANDARDS, AND UTILITY COMPANY REGULATIONS, HE SHALL BEAR ALL COSTS ARISING TO CORRECT THE DEFICIENCIES.

10 CONTRACTOR SHALL INITIATE, MAINTAIN, AND SUPERVISE ALL SAFETY PRE-CAUTIONS REQUIRED FOR HIS WORK, INCLUDING REGULATIONS OF THE OCCUPATIONAL SAFETY AND HEALTH ADMINISTRATION (OSHA).

11 DRAWINGS ARE TO SCALE AS NOTED, BUT THE CONTRACTOR SHALL REFER TO ARCHITECTURAL AND STRUCTURAL DRAWINGS FOR EXACT LOCATION OF PARTITIONS, WALLS, BEAMS, SHAFTS, EQUIPMENT, ETC.

12 EACH TRADE SHALL OBTAIN DRAWINGS AND SPECIFICATIONS OF ALL OTHER TRADES AND COORDINATE HIS WORK WITH ALL OTHER TRADES.

13 DRAWINGS SHOW THE GENERAL ARRANGEMENT OF DUCTWORK, PIPING, EQUIPMENT, AND APPURTENANCES AND SHALL BE FOLLOWED AS CLOSELY AS ACTUAL BUILDING CONSTRUCTION AND WORK OF OTHER TRADES WILL PERMIT. MECHANICAL WORK SHALL CONFORM TO THE REQUIREMENTS SHOWN ON ALL OF THE DRAWINGS. ARCHITECTURAL AND STRUCTURAL DRAWINGS SHALL TAKE PRECEDENCE OVER MECHANICAL DRAWINGS. BECAUSE OF THE SMALL SCALE OF THE MECHANICAL DRAWINGS, IT IS NOT POSSIBLE TO INDICATE ALL OFFSETS, FITTINGS, AND ACCESSORIES THAT MAY BE REQUIRED.

14 DISCREPANCIES DISCOVERED BEFORE OR AFTER WORK HAS STARTED SHALL BE BROUGHT TO THE ATTENTION OF THE ENGINEER IMMEDIATELY, AND THE ENGINEER RESERVES THE RIGHT TO REQUIRE MINOR CHANGES IN THE WORK OF ANY CONTRACTOR TO ELIMINATE SUCH DISCREPANCIES WITH NO CHANGE IN CONTRACT COST.

15 PLANS AND SPECIFICATIONS ARE COMPLEMENTARY, AND WHAT IS CALLED FOR IN EITHER ONE SHALL BE AS BINDING AS IF CALLED FOR IN BOTH.

16 WHERE A DISAGREEMENT EXISTS BETWEEN THE PLANS AND SPECIFICATIONS, THE ITEM OR ARRANGEMENT OF BETTER QUALITY, GREATER QUANTITY, OR HIGHER COST SHALL BE INCLUDED IN THE BID.

17 ALL MATERIALS AND EQUIPMENT SHALL BE STORED IN SUCH A PLACE AND IN SUCH A MANNER THAT A MINIMUM OF CONGESTION WILL RESULT. THE PLACING OF SUCH MATERIALS AND EQUIPMENT SHALL BE SUBJECT TO THE APPROVAL OF THE OWNER.

18 EACH CONTRACTOR SHALL COORDINATE WORK WITH OTHER TRADES IN THE INSTALLATION OF EQUIPMENT, PIPING, CONDUIT, AND DUCTWORK.

19 CONTRACTORS SHALL SOLVE ALL COORDINATION CONFLICTS AMONG THEMSELVES WHEN POSSIBLE. ENGINEER WILL ARBITRATE WHEN NECESSARY, AND HIS JUDGMENT WILL STAND, WITH NO ADDITIONAL COST TO THE OWNER.

20 ACCESS PANELS SHALL BE FURNISHED BY THE TRADE REQUIRING THEM AND DELIVERED TO THE GENERAL CONTRACTOR FOR INSTALLATION.

21 EACH TRADE SHALL PERFORM ALL REMOVING, CUTTING, PATCHING, AND REPLACEMENT OF ALL BUILDING STRUCTURE, SURFACES, AND FINISHES NECESSARY IN ORDER TO PERFORM THE WORK, UNLESS SUCH WORK HAS BEEN DELEGATED TO THE GENERAL CONTRACTOR/ANOTHER TRADE. HOWEVER, SPECIAL PERMISSION SHALL BE OBTAINED FROM THE ENGINEER BEFORE CUTTING STRUCTURAL MEMBERS OR FINISHED MATERIALS. ALL PATCHING SHALL BE PERFORMED IN SUCH MANNER AS TO LEAVE NO VISIBLE TRACE AND TO RETURN THE PART AFFECTED TO THE CONDITION OF UNDISTURBED WORK. PATCHING WORK SHALL BE PERFORMED BY PERSONS EXPERIENCED, SKILLED, AND LICENSED FOR THE PARTICULAR TYPE OF WORK INVOLVED. INFERIOR WORK WILL NOT BE ACCEPTED. ALL HOLES IN MASONRY SHALL BE DRILLED WITH ROTARY DRILLS. IMPACT TOOLS SHALL NOT BE USED.

22 EACH TRADE SHALL BEAR THE EXPENSE OF ALL CUTTING, PATCHING, REPAIRING, OR REPLACING OF THE WORK OF OTHER TRADES REQUIRED BECAUSE OF HIS FAULT, ERROR, OR TARDINESS OF BECAUSE OF ANY DAMAGE DONE BY HIM.

23 EACH TRADE SHALL PROVIDE ALL HOLES AND OPENINGS REQUIRED FOR HIS WORK, UNLESS SUCH HOLES AND OPENINGS ARE SHOWN TO BE PROVIDED ON THE ARCHITECTURAL OR STRUCTURAL DRAWINGS.

24 EACH TRADE SHALL PERIODICALLY CLEAR AWAY ALL DEBRIS, SURPLUS MATERIALS, ETC., RESULTING FROM HIS WORK OR OPERATIONS, LEAVING THE JOB AND THE EQUIPMENT FURNISHED UNDER ANY OR ALL CONTRACTS IN A CLEAN CONDITION.

25 EACH TRADE SHALL TEST THE EQUIPMENT PROVIDED AND/OR INSTALLED UNDER THE SPECIFICATION AND SHALL DEMONSTRATE ITS PROPER OPERATION TO THE OWNER'S OPERATING ENGINEER.

26 EACH TRADE SHALL FURNISH, WITHOUT ADDITIONAL EXPENSE TO THE OWNER, THE SERVICES OF COMPETENT INSTRUCTORS, WHO WILL GIVE FULL INSTRUCTION IN THE CARE, ADJUSTMENT, AND OPERATION AND MAINTENANCE OF ALL PARTS OF THE EQUIPMENT TO THE OWNER'S PERMANENT EMPLOYEES WHO ARE TO HAVE CHARGE OF THE EQUIPMENT.

27 ALL WOOD NAILERS AND OTHER LUMBER WHICH IS INSTALLED IN CONTACT WITH METAL, CONCRETE, OR MASONRY SHALL BE PRESSURE TREATED AGAINST DECAY (UNLESS OTHERWISE NOTED).

28 MATERIAL EXPOSED WITHIN RETURN AIR PLENUM CEILINGS SHALL COMPLY WITH APPLICABLE CODE.

29 PLANS DO NOT INCLUDE ALL OFFSETS FOR COORDINATION WITH DUCT, PIPING, LIGHTING, AND STRUCTURAL SYSTEMS. PROVIDE ALLOWANCES FOR REQUIRED OFFSETS. PROVIDE OFFSETS AS REQUIRED.

30 BEFORE SUBMITTING A PROPOSAL ON THE WORK SHOWN ON THESE DRAWINGS AND ACCOMPANYING SPECIFICATIONS, EACH BIDDER SHALL EXAMINE THE SITE, CHECK AS TO THE MEANS OF MAKING CONNECTIONS TO SERVICES, AND SHALL BECOME FAMILIAR WITH ALL THE EXISTING CONDITIONS AND LIMITATIONS. NO EXTRAS WILL BE ALLOWED BECAUSE OF THE CONTRACTOR'S MISUNDERSTANDING AS TO THE AMOUNT OF WORK INVOLVED OR HIS LACK OF KNOWLEDGE OF ANY SITE CONDITIONS WHICH MAY AFFECT HIS WORK. ANY APPARENT VARIANCE OF THE PLAN OR SPECIFICATION FROM EXISTING CONDITIONS AT THE SITE SHALL BE CALLED TO THE ATTENTION OF THE ENGINEER DURING THE BID PERIOD SO CLARIFICATION CAN BE MADE BY ADDENDUM.

31 NORMAL USE OF THE FACILITY SHALL NOT BE DISTURBED, EXCEPT WITHIN THE IMMEDIATE CONSTRUCTION AREA. ALL WALKS, DRIVEWAYS, AND ENTRANCES SHALL BE KEPT CLEAR AND FREE OF ALL CONTRACTOR'S EQUIPMENT, MATERIAL, AND DEBRIS AT ALL TIMES.

32 CONTRACTOR SHALL THOROUGHLY EXAMINE THE EXISTING BUILDING WITH REGARD TO WHAT TEMPORARY MEASURES HE MUST TAKE IN ORDER TO PERMIT THE OWNER TO OCCUPY SPECIFIC AREAS OF THE BUILDING DURING THE VARIOUS CONSTRUCTION PHASES. REFER TO DIVISION 1, SECTION 1010, "SUMMARY OF WORK" FOR CONSTRUCTION SEQUENCING SCHEDULE. IN GENERAL, SYSTEMS MUST REMAIN IN USE IN THOSE DESIGNATED AREAS TO PERMIT THE OWNER TO FUNCTION IN A PRE-CONSTRUCTION MANNER.

33 EACH TRADE SHALL REMOVE EXISTING WORK THAT IS SHOWN, SPECIFIED, OR OBVIOUSLY NECESSARY FOR COMPLETION OF HIS WORK. OWNER SHALL HAVE THE OPTION OF RETAINING ANY ITEM OR MATERIAL REMOVED UNDER THIS CONTRACT. ITEMS OR MATERIALS NOT RETAINED BY OWNER SHALL BECOME THE PROPERTY OF THE TRADE AND SHALL BE REMOVED FROM THE PREMISES.

HVAC GENERAL NOTES

1 HVAC/SHEET METAL CONTRACTOR SHALL INITIATE THE COORDINATION PROCESS BY PROVIDING REPRODUCIBLE PLAN DRAWINGS SHOWING DUCTWORK AND EQUIPMENT. DRAWINGS WILL BE FORWARDED TO THE PIPING CONTRACTOR AND ELECTRICAL CONTRACTOR FOR INCLUSION OF THEIR SYSTEMS WORK.

2 ALL FLEX DUCT MUST BE INSTALLED PER THE ADC (AIR DIFFUSION COUNCIL) INSTALLATION STANDARDS (MOST CURRENT EDITION), INCLUDING A BEND RADIUS OF ONE DUCT DIAMETER OR GREATER, PROPERLY SEALED AND SECURED WITH 2 INCH BEADED COLLARS, PROPERLY SUPPORTED AND FULLY EXTENDED DUCT. FAN CALCULATIONS FOR THIS PROJECT WERE SIZED FOR 4 FOOT MAXIMUM FLEX DUCT INSTALLED PER THE ADC INSTALLATION STANDARDS. FLEX DUCT SHOWN ON PLANS IS FOR SCHEMATIC PURPOSES ONLY AND SHALL IN NO INSTANCE EXCEED 4 FOOT.

3 HVAC CONTRACTOR SHALL LINE THE INSIDE OF ALL RETURN/RELIEF/EXHAUST PLENUM BOXES PER SPECIFICATIONS. IF NO LINING IS REQUIRED, HVAC CONTRACTOR SHALL PAINT THE INSIDE FLAT BLACK.

4 HVAC CONTRACTOR SHALL BE RESPONSIBLE FOR TESTED AND RATED FIRE STOP SYSTEMS FOR ALL THRU PENETRATIONS OF THE WALLS, FLOORS, AND ROOF ASSEMBLIES RESULTING FROM PIPING AND OTHER WORK UNDER HIS CONTRACT. REFER TO SPECIFICATION SECTION 07841 - FIRESTOPPING FOR REQUIREMENTS.

5 ALL DUCT SIZES ARE INTERNAL DIMENSIONS. CONTRACTOR SHALL INCREASE SHEET METAL SIZE IF DUCT RECEIVES INTERNAL LINER. SEE SPECIFICATIONS FOR INSULATION REQUIREMENTS.

6 DUCT ROOF PENETRATION SIZES TO ROOFTOP UNITS ARE SAME AS DUCT MAIN, UNLESS NOTED OTHERWISE. TRANSITION TO UNIT CONNECTION SIZES WITHIN ROOF CURBS.

7 LOCATIONS OF ORIFICES/L-VENTS FOR FABRIC DUCTS ARE ORIENTED WHEN FACING THE DIRECTION OF AIRFLOW.

8 MAINTAIN A MINIMUM OF 10'-0" HORIZONTAL DISTANCE FROM ANY INTAKE TO EXHAUST OUTLET.

9 HVAC CONTRACTOR SHALL CLOSELY COORDINATE WITH GENERAL CONTRACTOR FOR EXACT FIRE AND FIRE/SMOKE DAMPER PENETRATION SIZES IN WALLS AND FLOORING. FLOOR OPENINGS PROVIDED BY PRECAST MANUFACTURER ARE OVERSIZED AND M.C. MUST RELAY EXACT (NOT NOMINAL) OPENING SIZE MEETING UL LISTING TO CONCRETE INSTALLER FOR FRAMING OUT FLOOR OPENING. FLOOR OPENING SHALL HAVE 0.5" FREE SPACE AROUND ALL FOUR SIDES OF DAMPER AT ANY TIME TO ALLOW FOR EXPANSION. NO EXCEPTIONS. INSTALL MOUNTING ANGLE ON ALL FOUR SIDES OF FIRE DAMPERS; ANGLES SHALL NOT BE SECURED TO FLOOR OR WALL. FIRE CAULKING AROUND DAMPERS IS STRICTLY PROHIBITED. REFER TO STANDARDS UL555 & UL555S AND DAMPER MANUFACTURER'S INSTALLATION INSTRUCTIONS.

PLUMBING GENERAL NOTES

1 COORDINATE UNDERGROUND PIPING WITH GENERAL CONTRACTOR TO ENSURE PROPER FOOTING DEPTH CLEARANCE.

2 PROVIDE ALL MATERIALS AND EQUIPMENT AND PERFORM ALL LABOR REQUIRED TO INSTALL COMPLETE AND OPERABLE PLUMBING SYSTEM AS INDICATED ON THE DRAWINGS, AS SPECIFIED, AND AS REQUIRED BY CODE.

3 STORM DRAIN AND ALL VENT PIPING AT 1/8" PER FOOT SLOPE UNLESS NOTED OTHERWISE: ALL WASTE PIPING AT 1/4" PER FOOT SLOPE.

4 ELEVATIONS SHOWN ARE TO THE INVERT OF ALL PIPING BASED ON ARCHITECTURAL FINISHED FLOOR ELEVATION (FFE) OF 100'-0", UNLESS NOTED OTHERWISE.

5 ADJUST SEWER INVERTS TO KEEP BOTTOM OF PIPES IN LINE WHERE PIPE SIZES CHANGE.

6 PROVIDE SHUTOFF VALVES IN ALL WATER PIPING SYSTEM BRANCHES IN WHICH BRANCH PIPING SERVES TWO OR MORE FIXTURES (NOT SHOWN FOR CLARITY) AND WHERE SHOWN ON PLAN AND RISERS.

7 INSTALL PIPING SO THAT ALL VALVES, STRAINERS, UNIONS, TRAPS, FLANGES, AND OTHER ACCESSORIES REQUIRING ACCESS ARE ACCESSIBLE.

8 UNIONS AND/OR FLANGES SHALL BE INSTALLED AT EACH PIECE OF EQUIPMENT, IN BYPASSES, AND IN LONG RUNS (OVER 100') TO PERMIT DISASSEMBLY FOR ALTERATION AND REPAIRS.

9 ALL VALVES SHALL BE ADJUSTED FOR SMOOTH AND EASY OPERATION.

10 ALL VALVES (EXCEPT CONTROL VALVES) AND STRAINERS SHALL BE FULL SIZE OF PIPE BEFORE REDUCING SIZE TO MAKE CONNECTIONS TO EQUIPMENT AND CONTROLS.

11 PROVIDE CLEANOUTS IN SANITARY AND STORM DRAINAGE SYSTEMS AT THE ENDS OF RUNS, AT CHANGES IN DIRECTION, NEAR THE BASE OF STACKS, EVERY 100' IN 4" AND LARGER HORIZONTAL RUNS, EVERY 50' IN 3" AND SMALLER HORIZONTAL RUNS, WHERE NOTED ON PLANS, AND WHERE REQUIRED BY CODE.

12 ALL VALVES SHALL BE INSTALLED SO THAT THE VALVE REMAINS IN SERVICE WHEN EQUIPMENT OR PIPING ON EQUIPMENT SIDE OF VALVE IS REMOVED.

13 SEE PLUMBING RISERS FOR SIZING NOT SHOWN ON PLAN SHEETS (FOR CLARITY) AND SEE PLUMBING FIXTURE SCHEDULE FOR FIXTURE CONNECTIONS AND RUNOUT SIZES.

14 CONTRACTOR TO ENSURE THAT CLEANOUTS (FCO, WCO, CO) LOCATIONS DO NOT REST BELOW OR BEHIND CASEWORK.

15 PLUMBING CONTRACTOR IS RESPONSIBLE FOR ALL REMOVING, CUTTING, PATCHING, AND REPLACEMENT OF ALL BUILDING STRUCTURE, SURFACES, AND FINISHES REQUIRED TO COMPLETE WORK STATED IN THE CONTRACT DOCUMENTS.

16 PLUMBING CONTRACTOR TO COORDINATE COUNTER OPENINGS FOR NEW SINKS/LAVS WITH GENERAL CONTRACTOR PRIOR TO ORDERING MATERIALS.

17 PIPES SHOWN SPREAD APART ON PLANS FOR CLARITY. CONTRACTOR TO INSTALL PIPES TIGHT TOGETHER.

18 ALL UNDERGROUND DOMESTIC WATER PIPING SHALL BE SEAMLESS TYPE 'K' COPPER PIPING WITH NO JOINTS. SEE SPECIFICATIONS.

19 GAS PIPING SUPPORTS TO BE EVERY 5 FEET.

20 SEE ARCHITECTURAL ROOF PLAN FOR ROOF SLOPE AND SCUPPER SIZES/LOCATIONS.

21 REDUCED PRESSURE ZONE BACKFLOW PREVENTER (RPZ) SHALL BE INSTALLED AT AN ELEVATION BETWEEN 3'-0" AFF AND 6'-0" AFF AND LABELED INDICATING EQUIPMENT SERVED. RPZ'S SHALL BE INSPECTED AND TESTED ANNUALLY OR AT A RATE PER LOCAL CODES.

22 PIPING MATERIAL FOR SANITARY WASTE, PLUMBING VENTS, AND STORM SEWER SHALL BE CAST IRON WHERE PIPING RUNS THROUGH A RETURN-AIR PLENUM. REFERENCE APPLICABLE MECHANICAL CODE, WITH LOCAL AMENDMENTS. WHERE PIPING MATERIAL MUST BE PVC THE PIPE SHALL BE WRAPPED WITH 3M FIRE BARRIER WRAP AS DESCRIBED IN MECHANICAL SPECIFICATION.

23 FIRE CAULK ALL FLOOR PENETRATIONS AND WHERE PIPING PENETRATES RATED WALLS.

24 ALL PLUMBING INSTALLATION SHALL CONFORM TO STATE PLUMBING CODE WITH LOCAL AMENDMENTS.

25 WHERE NOT SPECIFICALLY INDICATED OTHERWISE, ALL GAS PIPING AND EQUIPMENT SHALL BE SUPPORTED PER THE SMACNA GUIDELINES FOR SEISMIC RESTRAINT AND CURRENT APPLICABLE STATE BUILDING CODE.

26 THE TOTAL INSTALLATION SHALL COMPLY WITH ANY AND ALL REQUIREMENTS OF THE LEGALLY CONSTITUTED AUTHORITIES HAVING JURISDICTION INCLUDING STATE BUILDING CODE, THE STATE MECHANICAL CODE, AND THE STATE PLUMBING CODE.

28 PLUMBING CONTRACTOR IS RESPONSIBLE TO REMOVE ALL SHAVINGS IN PVC/CPVC/ABS PIPING IN DOMESTIC WATER, SANITARY SEWER, AND STORM SEWER PIPING PRIOR TO LEAVING SITE.

29 PLUMBING CONTRACTOR IS RESPONSIBLE TO PURGE DOMESTIC WATER SYSTEM, INCLUDING BUT NOT LIMITING, ALL CWHW/CHW PIPING, WATER HEATERS, VALVING, AND PLUMBING FIXTURES, OF ALL DELETERIOUS MATTER AND DISINFECT ENTIRE SYSTEM PRIOR TO UTILIZATION, AS DEFINED AND DESCRIBED IN APPLICABLE PLUMBING CODE.

FIRE PROTECTION GENERAL NOTES

1 COORDINATE UNDERGROUND PIPING WITH GENERAL CONTRACTOR TO ENSURE PROPER FOOTING DEPTH CLEARANCE.

2 PROVIDE ALL MATERIALS AND EQUIPMENT AND PERFORM ALL LABOR REQUIRED TO INSTALL COMPLETE AND OPERABLE FIRE PROTECTION SYSTEM AS INDICATED ON THE DRAWINGS, AS SPECIFIED, AND AS REQUIRED BY CODE.

3 INSTALL PIPING SO THAT ALL VALVES, STRAINERS, UNIONS, TRAPS, FLANGES, AND OTHER ACCESSORIES REQUIRING ACCESS ARE ACCESSIBLE.

4 UNIONS AND/OR FLANGES SHALL BE INSTALLED AT EACH PIECE OF EQUIPMENT, IN BYPASSES, AND IN LONG RUNS (OVER 100') TO PERMIT DISASSEMBLY FOR ALTERATION AND REPAIRS.

5 ALL VALVES SHALL BE ADJUSTED FOR SMOOTH AND EASY OPERATION.

6 ALL VALVES (EXCEPT CONTROL VALVES) AND STRAINERS SHALL BE FULL SIZE OF PIPE BEFORE REDUCING SIZE TO MAKE CONNECTIONS TO EQUIPMENT AND CONTROLS.

7 FIRE PROTECTION CONTRACTOR IS RESPONSIBLE FOR ALL REMOVING, CUTTING, PATCHING, AND REPLACEMENT OF ALL BUILDING STRUCTURE, SURFACES, AND FINISHES REQUIRED TO COMPLETE WORK STATED IN THE CONTRACT DOCUMENTS.

8 PIPES SHOWN SPREAD APART ON PLANS FOR CLARITY. CONTRACTOR TO INSTALL PIPES TIGHT TOGETHER.

9 FIRE CAULK ALL FLOOR PENETRATIONS AND WHERE PIPING PENETRATES RATED WALLS.

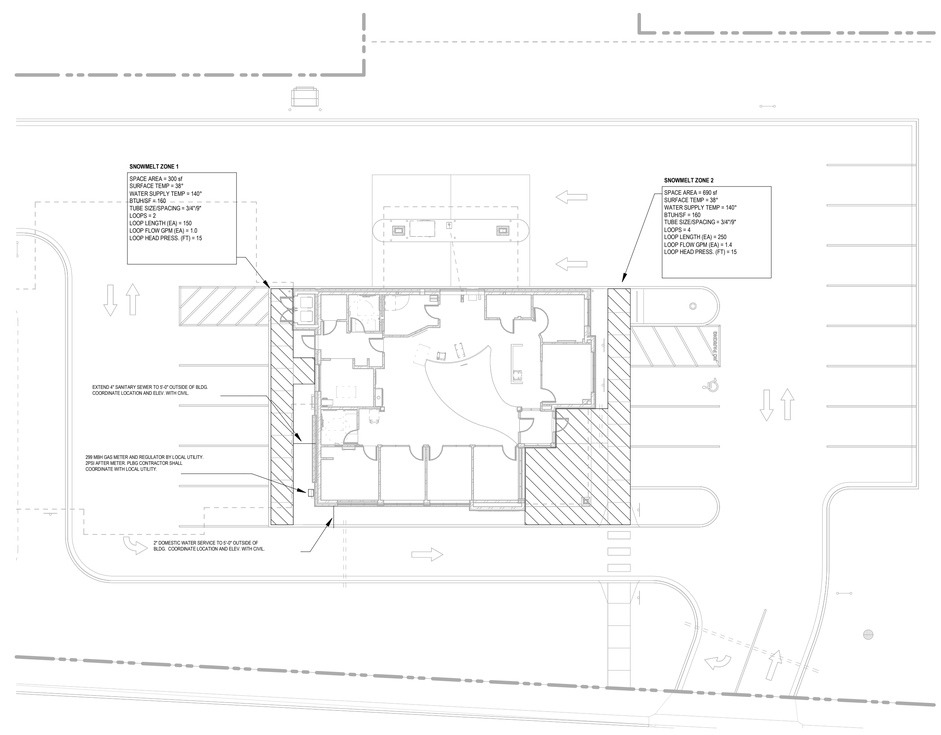

1 MECHANICAL SITE PLAN
NO SCALE

HTG architects

www.htg-architects.com
Minneapolis Bismarck

1010 Mainstreet, Suite 100
Hopkins, MN 55343
Tel: 952.278.8880

PROJECT

MAYO EMPLOYEES
FEDERAL CREDIT UNION

NEW BUILDING

605 WEST AVE S.
LA CROSSE, WI

ISSUED SET	2026-03-27
REVISIONS	
DATE	NO

I hereby certify that this plan, specification or report was prepared by me or under my direct supervision and that I am a duly Licensed Professional Engineer under the laws of the state of Minnesota

Reg No. Date

emanuelson-podas consulting engineers
Emanuelson-Podas, Inc.
7705 Bush Lake Road
Edina, MN 55439
(952) 930-0050 | www.epinc.com

MECHANICAL GENERAL NOTES & SITE PLAN

Drawn By: JM Checked By: JH

M0.1

3392.0002

COPYRIGHT © HTG ARCHITECTS

Autodesk Docs://3392.0002/Mayo EFCU - Lacrosse WI/Mayo EFCU_Lacrosse WI_MEP_2025.rvt
3/26/2026 9:20:54 PM

GENERAL NOTES:

A. SEE SHEET M0.1 FOR GENERAL NOTES

KEY NOTES:

1. EXTEND 4" SANITARY TO 5' OUTSIDE BUILDING WITH FLOOR CLEANOUT. COORDINATE EXACT LOCATION WITH CIVIL.
2. EXTEND 6" STORM TO 5' OUTSIDE BUILDING WITH FLOOR CLEANOUT. COORDINATE EXACT LOCATION WITH CIVIL.
3. EXTEND 2" DOMESTIC WATER SERVICE FROM 5' OUTSIDE BUILDING INTO BUILDING.
4. EXTEND 4" STORM TO 5' OUTSIDE BUILDING WITH WALL CLEANOUT. COORDINATE EXACT LOCATION WITH CIVIL.
5. PROVIDE ROUGH IN FOR FUTURE WATER SOFTENER WITH BYPASS LINE AND SHUTOFF VALVES.
6. MOUNT WATER HEATER ON WALL WITH BOTTOM AT 6' ABOVE FLOOR. SEE DETAIL.
7. GAS METER & REGULATOR BY LOCAL UTILITY. EXTEND 3/4" @2psi AFTER METER. PROVIDE BUILDING SHUT OFF IMMEDIATELY WHEN ENTERING BUILDING.
8. DROP STORM PIPING DOWN ALONG WALL TO BELOW GRADE. PROVIDE WITH CLEANOUT IN VERTICAL PIPING PRIOR TO FLOOR PENETRATION.
9. VENT UP TO 4" VENT THRU ROOF.
10. MOUNT WALL HYDRANT AT 18" ABOVE GRADE. PROVIDE SHUT OFF VALVE FOR WINTER SHUTDOWN.
11. DROP OVERFLOW STORM DOWN WALL AND DISCHARGE AT 18" ABOVE GRADE. SEE DETAIL 4/M5.2.
12. EXTEND CONDENSATION DRAIN LINE AS HIGH AS POSSIBLE AND THROUGH WALL TO UTILITY 114. DISCHARGE CONDENSATE DRAIN INTO MOP SINK IN UTILITY 114.
13. EXTEND 1-1/2" IRRIGATION FROM MAIN BELOW GRADE OUTSIDE BUILDING, ROUTE TO GREEN SPACE AND CAP FOR IRRIGATION CONTRACTOR. PROVIDE WATER METER IN IRRIGATION LINE.
14. DROP STORM PIPING IN PIER TO BELOW GRADE. PROVIDE WITH WALL CLEANOUT IN PIER PRIOR TO BELOW GRADE TRANSITION.

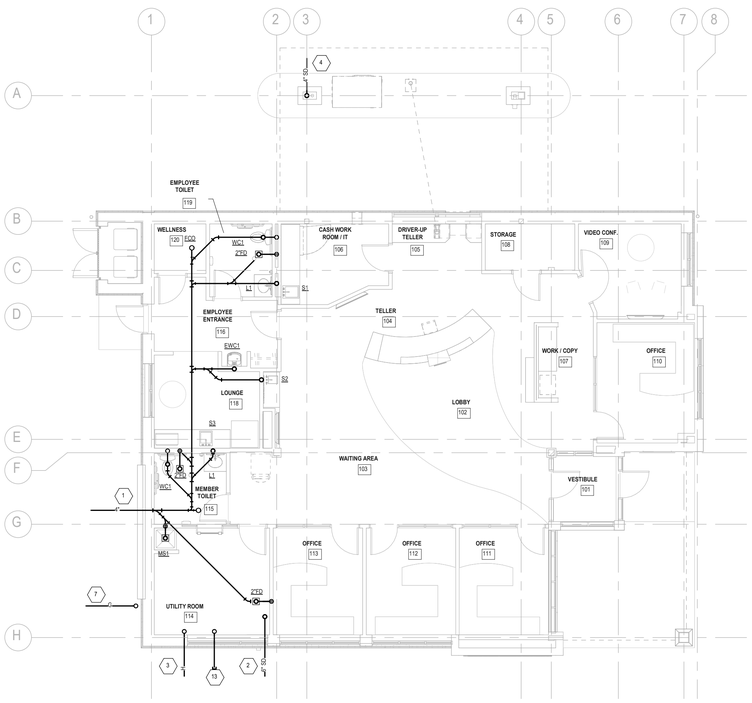

1 BELOW FLOOR PLAN - PLUMBING
SCALE: 1/8" = 1'-0"

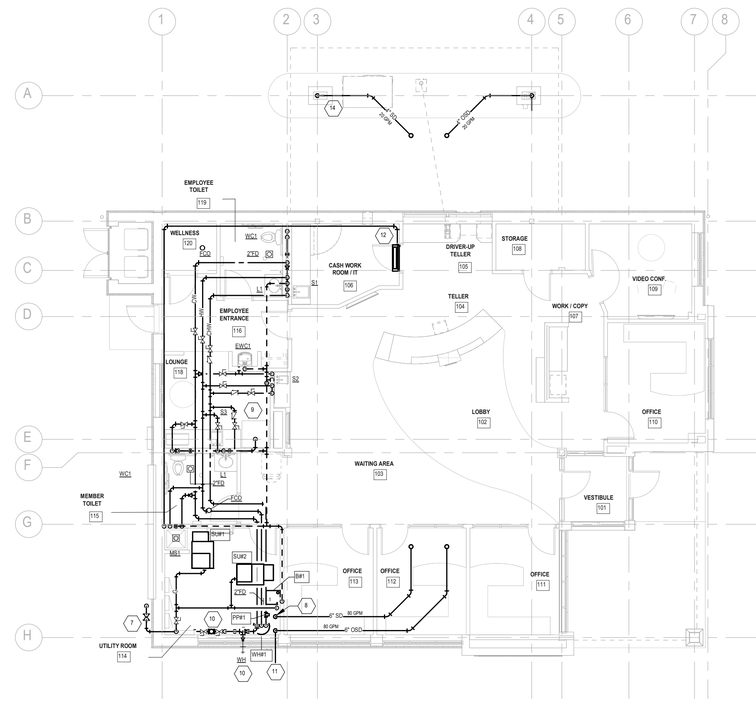

2 MAIN LEVEL PLAN - PLUMBING
SCALE: 1/8" = 1'-0"

www.htg-architects.com
Minneapolis Bismarck

1010 Mainstreet, Suite 100
Hopkins, MN 55343
Tel: 952.278.8880

PROJECT

MAYO EMPLOYEES FEDERAL CREDIT UNION

NEW BUILDING

605 WEST AVE S.
LA CROSSE, WI

ISSUED SET 2026-03-27
REVISIONS

DATE	NO	

I hereby certify that this plan, specification or report was prepared by me or under my direct supervision and that I am a duly Licensed Professional Engineer under the laws of the state of Minnesota

Reg No. Date

emanuelson-podas consulting engineers
Emanuelson-Podas, Inc.
7705 Bush Lake Road
Edina, MN 55439
(952) 930-0050 | www.epinc.com

MAIN LEVEL & BELOW FLOOR PLAN - PLUMBING

Drawn By: JB & DM Checked By: JH

M1.1

3392.0002

COPYRIGHT © HTG ARCHITECTS

Autodesk Docs://3392.0002/Mayo EFCU - Lacrosse WI/Mayo EFCU_Lacrosse WI_MEP_2025.rvt
3/26/2026 9:20:58 PM

GENERAL NOTES:

A. SEE SHEET M0.1 FOR GENERAL NOTES

B. ALL HVAC SYSTEMS TO BE BALANCED PER SECTION 6.7.3.3.1 OF ASHRAE 90.1-2019

C. ALL DUCTS TO BE SEAL CLASS A AT 2 INCH W.G. PRESSURE CLASS RATING.

KEY NOTES:

1. SUPPLY DIFFUSER (TYPICAL). SEE DETAIL 1/M6.1.
2. PROVIDE LINED TRANSFER DUCT. SEE DETAIL 7/M6.1.
3. EXTEND EXHAUST AIR UP THROUGH ROOF AND CONNECT TO ROOF EXHAUST FAN. SEE DETAIL 3/M6.1.
4. INSTALL FURNACE HUNG FROM STRUCTURE AS HIGH AS POSSIBLE AND SUPPORT FROM STRUCTURE WITH VIBRATION ISOLATORS. EXTEND FLUE AND COMBUSTION AIR FROM FURNACE THROUGH ROOF. SIZE AND INSTALL PER MANUFACTURERS INSTRUCTIONS. TYP.
5. INSTALL WALL MOUNTED ELECTRIC HEATER WITH HEATING ONLY LINE VOLTAGE WALL THERMOSTAT. PROVIDE RELAY AND INTERLOCK WITH OUTDOOR AIR TEMPERATURE SENSOR. OUTDOOR AIR TEMPERATURE SENSOR TO BE LOCATED WITHIN CONCEALED WEATHER PROOF EXTERIOR ENCLOSURE. COORDINATE FINAL LOCATION WITH ARCHITECT PRIOR TO INSTALL.
6. MOUNT INDOOR COOLING UNIT WITH BOTTOM 6" ABOVE DOOR. EXTEND REFRIGERANT PIPING UP THROUGH ROOF TO OUTDOOR UNIT. SIZE AND INSTALL PER MANUFACTURERS INSTRUCTIONS.
7. PROVIDE RETURN GRILLE PLENUM BOX AND FLEX DUCT WHERE SHOWN. SEE DETAIL 2/M6.1.

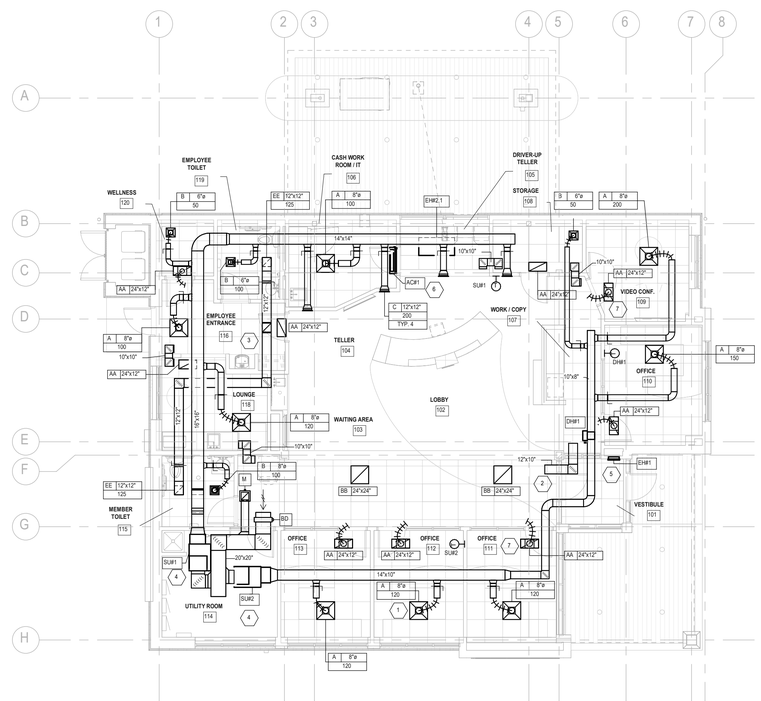

1 MAIN LEVEL PLAN - HVAC

SCALE: 1/8" = 1'-0"

HTG architects

www.htg-architects.com

Minneapolis Bismarck

1010 Mainstreet, Suite 100
Hopkins, MN 55343
Tel: 952.278.8880

PROJECT

MAYO EMPLOYEES FEDERAL CREDIT UNION

NEW BUILDING

605 WEST AVE S.
LA CROSSE, WI

ISSUED SET	2026-03-27
REVISIONS	
DATE	NO

I hereby certify that this plan, specification or report was prepared by me or under my direct supervision and that I am a duly Licensed Professional Engineer under the laws of the state of Minnesota

Reg No. Date

emanuelson-podas consulting engineers

Emanuelson-Podas, Inc.
7705 Bush Lake Road
Edina, MN 55439

(952) 930-0050 | www.epinc.com

MAIN LEVEL PLAN - HVAC

Drawn By: JB & DM Checked By: JH

M2.1

3392.0002

COPYRIGHT © HTG ARCHITECTS

Autodesk Docs://3392.0002 Mayo EFCU - Lacrosse WI/Mayo EFCU_Lacrosse WI_MEP_2025.rvt

3/26/2026 9:21:07 PM

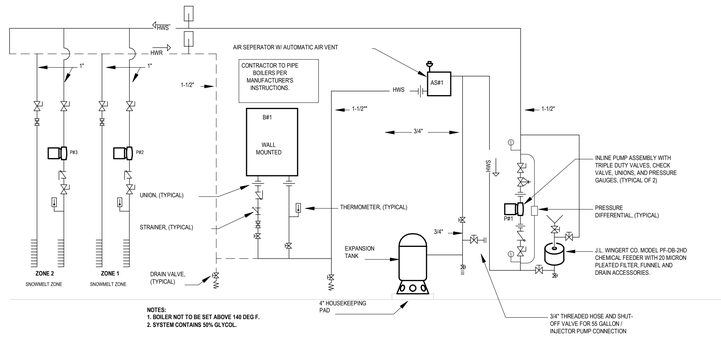

NOTES:
1. BOILER NOT TO BE SET ABOVE 140 DEG F.
2. SYSTEM CONTAINS 50% GLYCOL.

2 BOILER PIPING SCHEMATIC
NO SCALE

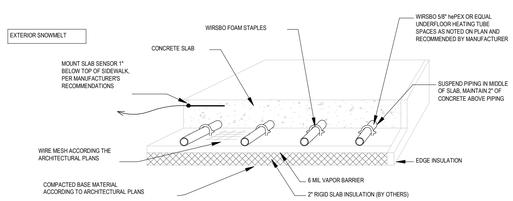

3 RADIANT PIPING (INTERIOR AND EXTERIOR) DETAIL
NO SCALE

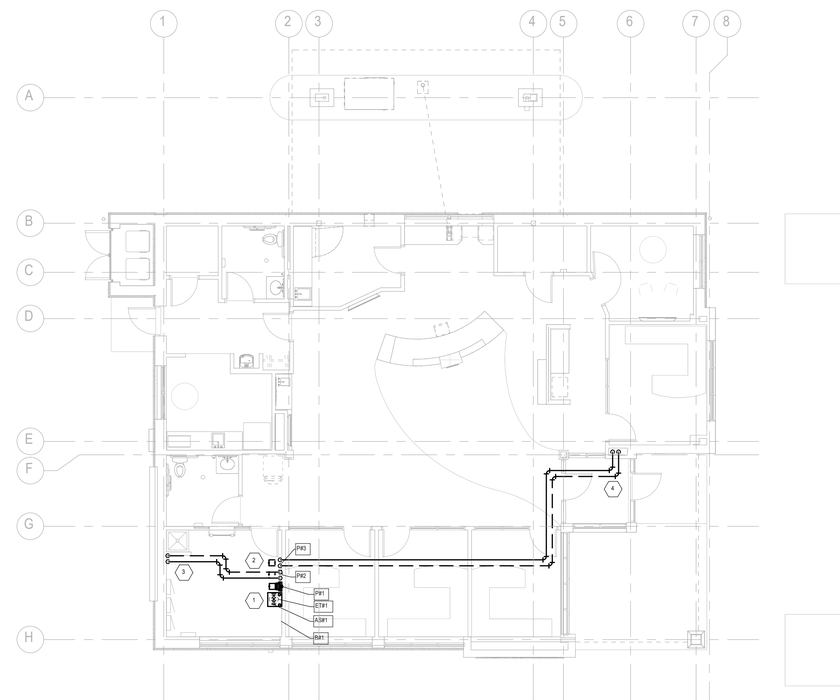

1 MAIN LEVEL PLAN - HVAC
SCALE: 1/8" = 1'-0"

GENERAL NOTES:

A. SEE SHEET M0.1 FOR GENERAL NOTES

B. ALL HVAC SYSTEMS TO BE BALANCED PER SECTION 6.7.3.3.1 OF ASHRAE 90.1-2019

KEY NOTES:

1. EXTEND BOILER FLUE AND COMBUSTION AIR PIPING THROUGH ROOF. INSTALL PER MANUFACTURERS INSTRUCTIONS. DO NOT ROUTE IN PLENUM RETURN.
2. INSTALL BOILERS ON WALL, MOUNT PUMPS AND ACCESSORIES ON WALL. MOUNT EXPANSION TANK 1'-6" MOUNTING FRAME. SEE 2/M3.1 FOR PIPING DIAGRAM AND PIPE SIZES.
3. DROP HOT WATER PIPING TO MANIFOLD ON WALL. EXTEND PIPING TO SNOW MELT ZONE 1, SEE 1/M0.1. TUBING TO BE INSTALLED IN SLAB. SEE DETAIL 5/M5.1. SNOW MELT TUBING TO BE INSULATED WITH BELOW GRADE RATED CLOSED CELL FOAM PIPE INSULATION BETWEEN BUILDING FOUNDATION AND EXTERIOR SLAB.
4. DROP HOT WATER PIPING TO MANIFOLD IN CHASE. EXTEND PIPING TO SNOW MELT ZONE 2, SEE 1/M0.1. TUBING TO BE INSTALLED IN SLAB. SEE DETAIL 9/M5.1. SNOW MELT TUBING TO BE INSULATED WITH BELOW GRADE RATED CLOSED CELL FOAM PIPE INSULATION BETWEEN BUILDING FOUNDATION AND EXTERIOR SLAB.

HTG architects
www.htg-architects.com
Minneapolis Bismarck
1010 Mainstreet, Suite 100
Hopkins, MN 55343
Tel: 952.278.8880

PROJECT

MAYO EMPLOYEES FEDERAL CREDIT UNION

NEW BUILDING

605 WEST AVE S.
LA CROSSE, WI

ISSUED SET 2026-03-27
REVISIONS

DATE	NO	

I hereby certify that this plan, specification or report was prepared by me or under my direct supervision and that I am a duly Licensed Professional Engineer under the laws of the state of Minnesota

Reg No. Date

emanuelson-podas consulting engineers
Emanuelson-Podas, Inc.
7705 Bush Lake Road
Edina, MN 55439
(952) 930-0050 | www.epinc.com

MAIN LEVEL PLAN - PIPING

Drawn By: JB & DM Checked By: JH

M3.1

3392.0002

COPYRIGHT © HTG ARCHITECTS

Autodesk Docs://3392.0002 Mayo EFCU - Lacrosse WI/Mayo EFCU_Lacrosse WI_MEP_2025.rvt
3/26/2026 9:27:01 PM

GENERAL NOTES:

A. SEE SHEET M0.1 FOR GENERAL NOTES

KEY NOTES:

1. INSTALL EXHAUST FAN AND CURB ON ROOF. EXTEND EXHAUST DUCT DOWN THROUGH ROOF; FIELD COORDINATE WITH STRUCTURE. SEE DETAIL.
2. MAINTAIN 10' CLEAR OF ROOF EDGES.
3. EXTEND REFRIGERANT PIPING FROM CONDENSING UNITS THROUGH WALL AND ROUTE TO FURNACES AND INTERIOR AC UNIT IN MEZZANINE. INSTALL PER MANUFACTURERS INSTRUCTIONS. (TYP). SEAL EXTERIOR PENETRATIONS WATER TIGHT.

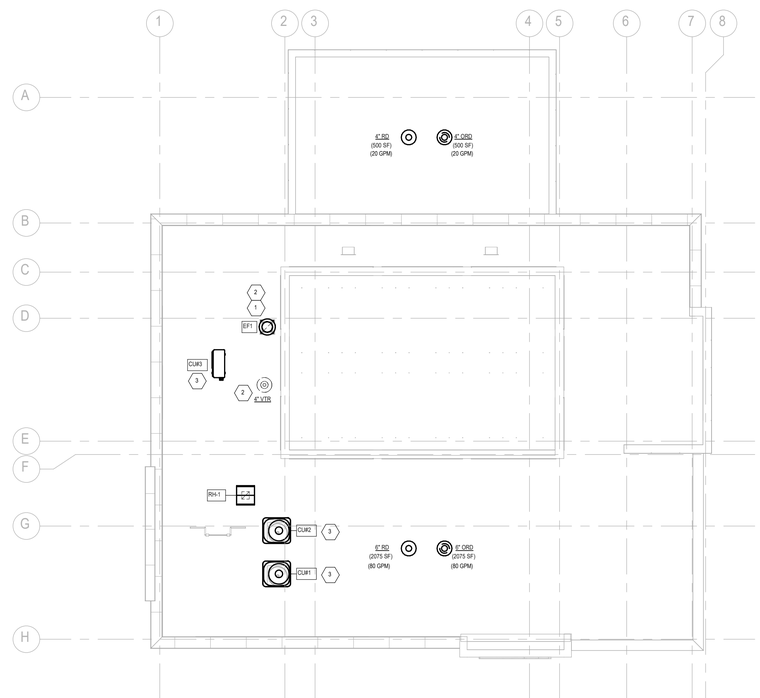

1 ROOF PLAN - MECHANICAL
SCALE: 1/8" = 1'-0"

HTG architects

www.htg-architects.com
Minneapolis Bismarck

1010 Mainstreet, Suite 100
Hopkins, MN 55343
Tel: 952.278.8880

PROJECT

MAYO EMPLOYEES FEDERAL CREDIT UNION

NEW BUILDING

605 WEST AVE S.
LA CROSSE, WI

ISSUED SET	2026-03-27
REVISIONS	
DATE	NO

I hereby certify that this plan, specification or report was prepared by me or under my direct supervision and that I am a duly Licensed Professional Engineer under the laws of the state of Minnesota

Reg No. Date

emanuelson-podas
consulting engineers

Emanuelson-Podas, Inc.
7705 Bush Lake Road
Edina, MN 55439

(952) 930-0050 | www.epinc.com

ROOF PLAN - MECHANICAL

Drawn By: JB & DM Checked By: JH

M4.1

3392.0002

COPYRIGHT © HTG ARCHITECTS

Autodesk Docs://3392.0002 Mayo EFCU - Lacrosse WI/Mayo EFCU_Lacrosse WI_MEP_2025.rvt
3/26/2026 8:21:01 PM

SEE PLUMBING FIXTURE SCHEDULE FOR ADDITIONAL PIPE AND FIXTURE CONNECTION SIZES

PLUMBING RISER DIAGRAMS ARE FOR REFERENCE OF GENERAL PIPE ROUTING AND PIPE SIZES AND ARE NOT FOR ACTUAL PIPING INSTALLATION. ALL PIPING SHALL BE INSTALLED PER CODE.

PROVIDE WATER HAMMER ARRESTORS ON ALL FLUSH VALVE AND SENSOR OPERATED FIXTURES. SIZE AND INSTALL PER MANUFACTURERS INSTRUCTIONS.

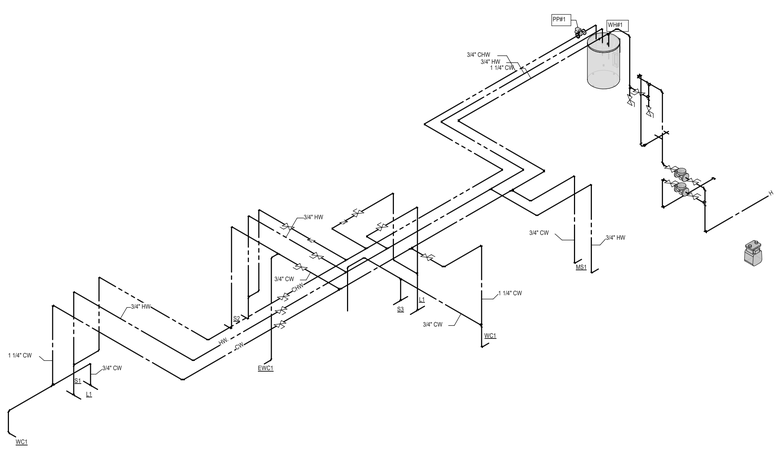

2 PLUMBING RISER - DOMESTIC
NO SCALE

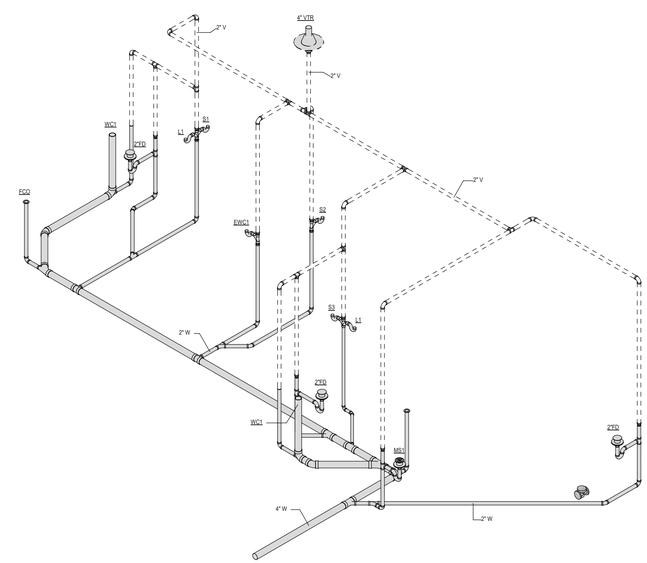

1 PLUMBING RISER - SANITARY
NO SCALE

HTG architects

www.htg-architects.com
Minneapolis Bismarck

1010 Mainstreet, Suite 100
Hopkins, MN 55343
Tel: 952.278.8880

PROJECT

MAYO EMPLOYEES FEDERAL CREDIT UNION

NEW BUILDING

605 WEST AVE S.
LA CROSSE, WI

ISSUED SET	2026-03-27

REVISIONS

DATE	NO	

I hereby certify that this plan, specification or report was prepared by me or under my direct supervision and that I am a duly Licensed Professional Engineer under the laws of the state of Minnesota

Reg No. Date

emanuelson-podas consulting engineers

Emanuelson-Podas, Inc.
7705 Bush Lake Road
Edina, MN 55439

(952) 930-0050 | www.epinc.com

PLUMBING RISER DIAGRAMS

Drawn By: JB & DM Checked By: JH

M5.1

3392.0002

COPYRIGHT © HTG ARCHITECTS

Autodesk Docs://3392.0002 Mayo EFCU - Lacrosse WI/Mayo EFCU_Lacrosse WI_MEP_2025.rvt
3/26/2026 9:21:03 PM

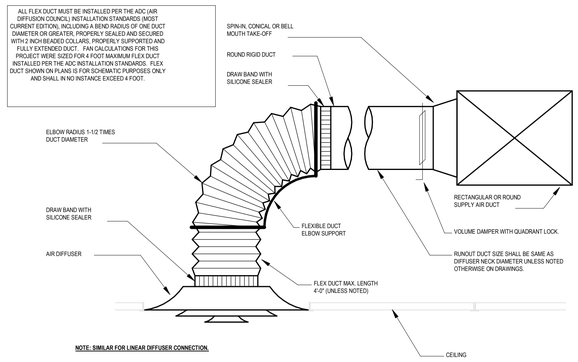

1 TYPICAL DIFFUSER CONNECTION
NO SCALE

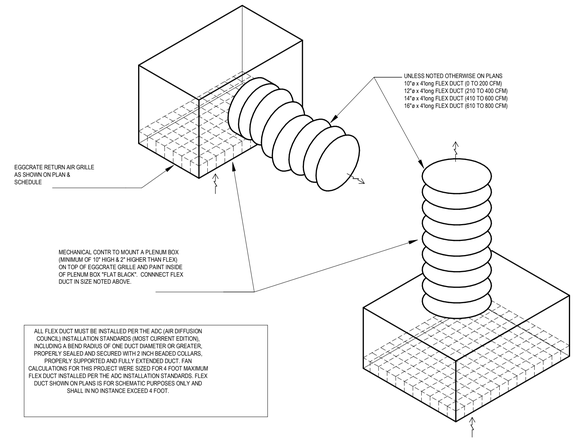

2 RETURN GRILLE PLENUM DETAIL
NO SCALE

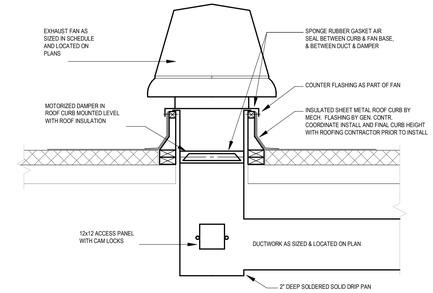

3 ROOF EXHAUST FAN DETAIL
NO SCALE

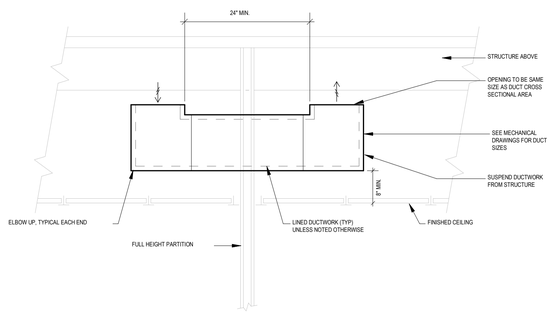

4 LINED TRANSFER AIR DUCT DETAIL
NO SCALE

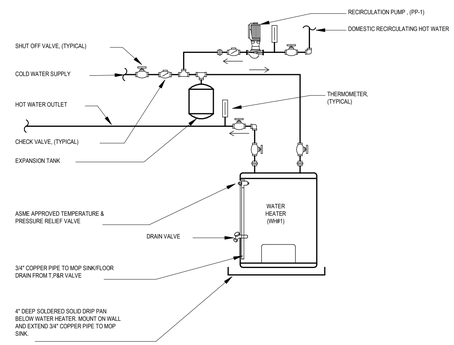

5 ELECTRIC WATER HEATER W/CIRC PUMP DETAIL
NO SCALE

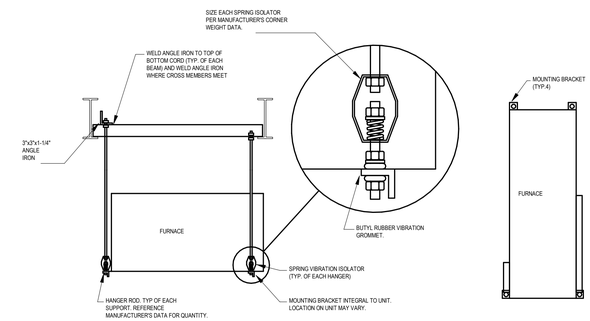

6 EQUIPMENT HANGING DETAIL
NO SCALE

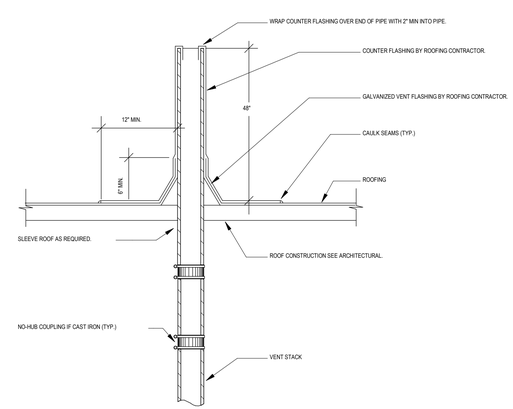

7 VENT THRU ROOF (VTR) DETAIL
NO SCALE

HTG architects
www.htg-architects.com
Minneapolis Bismarck
1010 Mainstreet, Suite 100
Hopkins, MN 55343
Tel: 952.278.8880

PROJECT

MAYO EMPLOYEES FEDERAL CREDIT UNION

NEW BUILDING

605 WEST AVE S.
LA CROSSE, WI

ISSUED SET 2026-03-27
REVISIONS

DATE	NO	

I hereby certify that this plan, specification or report was prepared by me or under my direct supervision and that I am a duly Licensed Professional Engineer under the laws of the state of Minnesota

Reg No. Date

emanuelson-podas consulting engineers
Emanuelson-Podas, Inc.
7705 Bush Lake Road
Edina, MN 55439
(952) 930-0050 | www.epinc.com

MECHANICAL DETAILS

Drawn By: JB & DM Checked By: JH

M6.1

3392.0002

COPYRIGHT © HTG ARCHITECTS

Autodesk Docs://3392.0002 Mayo EFCU - Lacrosse WI/Mayo EFCU_Lacrosse WI_MEP_2025.rvt
3/26/2026 8:21:03 PM

PLUMBING FIXTURE SCHEDULE

NOTES:
1. TRAP AND SUPPLY WRAP. ASSE 1070 MIXING VALVE.
2. COUNTER BY OTHERS - COORDINATE CLEARANCE SIZE AND ROUGH IN ELEVATION.
3. 4FT. HOSE AND MOP RACK.

MARK	FIXTURE	LOCAL CONNECTION SIZES (INCHES)				MOUNTING HEIGHT	NOTES
		WASTE	VENT	CW	HW		
2"FD	FLOOR DRAIN	2"	1-1/2"	---	---	FLOOR	
EWC1	ELECTRIC WATER COOLER	2"	1-1/2"	1/2"	---	WALL	
L1	LAVATORY	1-1/2"	1-1/2"	1/2"	1/2"	COUNTER	1,2
MS1	JANITOR'S SINK, FLOOR MOUNTED	2"	1-1/2"	1/2"	1/2"		
S1	SINK	2"	1-1/2"	1/2"	1/2"	COUNTER	1,2
S2	SINK	2"	1-1/2"	1/2"	1/2"	COUNTER	1,2
S3	SINK	2"	1-1/2"	1/2"	1/2"	COUNTER	1,2
WC1	WATER CLOSET, FLOOR-MOUNTED, FLUSH-VALVE	4"	2"	1-1/4"	---		
WH	HYDRANT - WALL (FREEZE PROOF)	---	---	3/4"	---	WALL	

WATER HEATER - ELECTRIC SCHEDULE

NOTES:
1. SET TEMPERATURE TO 120°F.
2. PROVIDE AMTROL THERM-X-TROL ST-5 EXPANSION TANK. CONNECT TO COLD WATER AT INLET TO HEATER.

MARK	MANUFACTURER	MODEL	TANK CAPACITY (GALS)	EWT (°F)	LWT (°F)	RECOVERY (GPH)	TOTAL INPUT (KW)	STAGES / NO. OF ELEMENTS	ELECTRICAL DATA			NOTES
									VOLTS	PHASE	FLA	
WH#1	A.O. SMITH	DEL-10	10.0	40	140	23	4	1	208	1	19.2	1,4

UNIT HEATER - ELECTRIC SCHEDULE

NOTES:
1. PROVIDE WITH INTEGRAL CONCEALED THERMOSTAT, RECESSED MOUNTING, INTEGRAL DISCONNECT.

MARK	MANUFACTURER	MODEL	AIRFLOW (CFM)	HEATING DATA		ELECTRICAL DATA				CONTROL	MOUNT	NOTES
				CAPACITY (KW)	CAPACITY (MBH)	EAT (°F)	VOLTS	PHASE	FLA	MCA			
EH#1	BERKO	FRC-4027F	100	2	6.8	65	208	1	9.6	0	INTEGRAL	WALL	1

RADIANT PANEL - ELECTRIC SCHEDULE

NOTES:
1. PROVIDE WITH 1" FOIL BACK INSULATION, PANEL TO BE 24 GAUGE, SUPPORT PANELS FROM STRUCTURE.
2. PROVIDE UNIT WITH FACTORY WIRED POWER RELAYS.

MARK	LOCATION		MANUFACTURER	MODEL	SIZE (LxW)	HEATING DATA		ELECTRICAL DATA					CONTROL	MOUNT	NOTES
	ROOM NAME	ROOM NO				CAP (KW)	CAP (MBH)	VOLTS	PHASE	FLA	MCA	MOCP			
EH#2.1			BERKO	CP502	48"x24"	0.5	1.7	208	1	3.6	4.5	20		SURFACE	

DUCT COIL - ELECTRIC SCHEDULE

NOTES:
... UNIT SHALL HAVE SCR CONTROLLER, DISCHARGE AIR TEMPERATURE SENSOR, AIR FLOW PROVING SWITCH AND SPACE START / STOP...

MARK	MANUFACTURER	MODEL	AIRFLOW (CFM)	EAT (°F)	LAT (°F)	INPUT (KW)	ELECTRICAL DATA		NOTES
							VOLTS	PHASE	
DH#1	THERMOLEC	CUSTOM	400	60	100	4	208	3	1

PLUMBING PUMP SCHEDULE

NOTES:
1. BRONZE WITH REPLACEABLE CARTRIDGE, CONSTANT SPEED.

MARK	MANUFACTURER	MODEL	SERVES	PUMP TYPE	GPM	PUMP HEAD (FT WG)	MOTOR DATA				NOTES
							HP	RPM	VOLTS	PHASE	
PP#1	BELL & GOSSETT	NBF-18S	BUILDING LOOP	INLINE	1	15	90W	3000	120	1	1

AIR BALANCE - OUTDOOR AIR: MAYO EFCU

MECHANICAL EQUIPMENT	ROOM NAME & NUMBER	AREA (SQ. FT)	PEOPLE	MAX SUPPLY CFM...	ASHRAE 62.1 REQUIREMENTS					ACTUAL OUTDOOR AIR	
					SPACE CLASSIFICATION	PEOPLE RATE (CFM/PER)	AREA RATE (CFM/SF)	Ez	Voz (CFM)	OA	
										MIN %	Total CFM
SU1	OFFICE 113	120	3	120	OFFICE	5.0	0.06	0.8	28	23.1%	28
	OFFICE 112	120	3	120	OFFICE	5.0	0.06	0.8	28	23.1%	28
	OFFICE 111	122	3	120	OFFICE	5.0	0.06	0.8	28	23.3%	28
	OFFICE 110	145	3	150	OFFICE	5.0	0.06	0.8	30	19.8%	35
	CONF 109	115	4	200	OFFICE	5.0	0.06	0.8	34	16.8%	47
SU2	TOILET 115	65	1	100	BATHROOM	0.0	0.00	0.8	0	0.0%	23
	LOUNGE 118	115	3	120	BREAKROOM	5.0	0.06	0.8	27	22.8%	28
	ENTRANCE 116	100	0	120	CORRIDOR	0.0	0.06	0.8	8	6.3%	28
	WELLNESS 120	32	1	100	BREAKROOM	5.0	0.06	0.8	9	8.7%	23
	TOILET 119	57	1	100	BATHROOM	0.0	0.00	0.8	0	0.0%	23
	IT 106	100	0	100	STORAGE	5.0	0.06	0.8	8	7.5%	23
	STORAGE 108	52	0	100	STORAGE	5.0	0.06	0.8	4	3.9%	23
	TELLER 104	275	2	250	LOBBY	5.0	0.06	0.8	33	13.3%	58
	WAITING AREA 103	235	3	250	LOBBY	5.0	0.06	0.8	36	14.6%	58
	LOBBY 102	330	0	250	LOBBY	5.0	0.06	0.8	25	9.9%	58
	COPY 107	115	0	250	LOBBY	5.0	0.06	0.8	9	3.5%	58
TOTALS		2,098	27	2,450					304		570

NOTES:
1. REBALANCE EXISTING UNITS ACCORDING TO THE SCHEDULE.

BOILER - GAS FIRED SCHEDULE

NOTES:
1. PROVIDE WITH OPTIONAL CONDENSATE NEUTRALIZATION KIT, LOW WATER CUTOFF, CONCENTRIC VENT KIT, INTERFACE MODULE (CONNECTION TO BAS).
2. CAPACITY BASED ON 50% GLYCOL.

MARK	LOCATION		MANUFACTURER	MODEL	WATER DATA					HEATER DATA				VENTING			ELECTRICAL DATA					WEIGHT (LBS)	NOTES
	ROOM NAME	ROOM NO.			FLOW RATE (GPM)	WATER PD (FT)	EWT (°F)	LWT (°F)	CONN (IN)	INPUT (MBH)	OUTPUT (MBH)	THERMAL EFF. (%)	WATER VOLUME (GAL)	VENT (IN)	AIR (IN)	MATERIAL	VOLTS	PHASE	FLA	MCA	MOCP		
BI#1			LOCHINVAR	WHB285	11	5	130	160	1-1/4	199	189	95	5.0	3	3	PVC	120	1	4	5	15	220	1,2

FURNACE - GAS FIRED SCHEDULE

NOTES:
1. CONCENTRIC VENT KIT FOR VENT AND COMBUSTION AIR PIPES TO TERMINATE THROUGH A SINGLE EXIT.
2. SIDE RETURN INLET WITH FILTER RACK AND 1" FILTERS.
3. ECM FAN MOTORS.
4. ACID NEUTRALIZATION KIT FOR CONDENSATE PIPING.
5. HONEYWELL VISIONPRO 8000, PROGRAMMABLE THERMOSTAT.

MARK	MANUFACTURER	MODEL	SUPPLY AIRFLOW (CFM)	OUTSIDE AIR (CFM)	ESP (IN WG)	MOTOR (HP)	HEATING DATA					COOLING DATA			CA CONN. SIZE (IN)	VENT CONN. SIZE (IN)	ELECTRICAL DATA					WEIGHT (LBS)	NOTES
							EAT (°F)	LAT (°F)	INPUT (MBH)		OUTPUT (MBH)	STAGES	EAT DB/WB (deg F)	LAT DB/WB (deg F)	CAPACITY TOTAL (MBH)		VOLTS	PHASE	FLA	MCA	MOCP		
									MIN	MAX													
SUI#1	CARRIER	060V14-14	1200		0.5	1/2	55	100	39	60	58	2	80/67	55/53	42	3	3	120	1	10.1	10.9	25	126	ALL
SUI#2	CARRIER	040V14-10	800		0.5	1/2	55	100	26	40	39	2	80/67	55/53	24	3	3	120	1	6.3	7	20	126	ALL

CONDENSING UNIT - AIR COOLED SCHEDULE

NOTES:
1. PROVIDE REFRIGERANT PIPE QUANTITIES AND TRAPS PER MANUFACTURER'S PIPING SCHEMATIC. CONTRACTOR TO VERIFY REFRIGERANT LINE LENGTHS WITH MANUFACTURER FOR LINE SIZES.
2. PROVIDE WITH UNIT STAND-OFF KIT, AND FACTORY INSTALLED TXV. PROVIDE WITH LOW AMBIENT KIT.

MARK	MANUFACTURER	MODEL	SEER/EER	COOLING CAPACITY TOTAL (MBH)	CONDENSER DATA					MOTOR DATA			WEIGHT (LBS)	NOTES
					FAN NO	FAN MOTOR HP	NO COMP	AMB TEMP (deg F)	REFRIG. TYPE	VOLTS	PHASE	MCA		
CUI#1	CARRIER	26TPA8	18	3	1	1/5	1	90	R-454B	208	1	20.9	214	ALL
CUI#2	CARRIER	26TPA8	18	2	1	1/5	1	90	R-454B	208	1	15.5	171	ALL

FAN SCHEDULE

NOTES:
1. 24-INCH PREINSULATED HINGED ROOF CURB AND CURB MOUNTED LOW LEAK MOTORIZED DAMPER, ACTUATOR TO BE SAME VOLTAGE AS FAN MOTOR. VERIFY CURB HEIGHT WITH ROOF INSULATION...

MARK	MANUFACTURER	MODEL	FAN DATA			MOTOR DATA			SONES	ELECTRICAL DATA					WEIGHT (LBS)	NOTES
			CFM	ESP (IN WG)	RPM	DRIVE TYPE	BHP	HP		VOLTS	PHASE	FLA	MCA	MOCP		
EF1	GREENHECK	G-098-VG	250	.5	1200	DIRECT	.05	1/6	5.4	208	1	1.5	1.9	15	54	1.

PUMP SCHEDULE

NOTES:
1. PUMP SIZING IS FOR BIDDING PURPOSES ONLY. FINAL PUMP SELECTION SHALL BE BASED ON FINAL RADIANT FLOOR LAYOUT.
2. CAPACITY BASED ON 50% PROPYLENE GLYCOL.

MARK	MANUFACTURER	MODEL	SERVES	TYPE	WATER FLOW (GPM)	PUMP HEAD (FT WG)	MOTOR DATA						NOTES
							HP	VOLTS	PHASE	FLA	MCA	MOCP	
P#1	BELL & GOSSETT	PL-36B	BOILER	INLINE	10.7	25	1/6	120	1	2.1	2.6	20	1,2
P#2	BELL & GOSSETT	PL-30B	ZONE 1	INLINE	5.6	20	1/12	120	1	1.4	1.75	20	1,2
P#3	BELL & GOSSETT	PL-30B	ZONE 1	INLINE	5.6	20	1/12	120	1	1.4	1.75	20	1,2

GRAVITY VENTILATOR SCHEDULE

NOTES:
1. PROVIDE ROOF CURB, BIRD SCREEN, HINGE KIT, AND 120V MOTORIZED DAMPER.

MARK	LOCATION		MANUFACTURER	MODEL	TYPE	AIRFLOW (CFM)	VELOCITY (FPM)	MAX PD (IN WG)	OVERALL HOOD SIZE W x L x H (IN)	THROAT SIZE W x L x H (IN)	CURB HEIGHT (IN)	NOTES
	ROOM NAME	ROOM NO										
RH-1	ROOF	- -	GREENHECK	RCS3	INTAKE	570	400	0.05	26 x 24 x 14	12 x 12 x 5	12"	1

AIR SEPARATOR SCHEDULE

NOTES:
1.

MARK	MANUFACTURER	MODEL	SERVICE	FLUID FLOW (GPM)	MAX PD (FT)	PIPE SIZE (IN)	NOTES
AS#1	SPIROTHERM	VDR 100TM	SNOWMELT	3	2	1	

EXPANSION TANK SCHEDULE

NOTES:
1. WATER IS A SOLUTION OF 50% GLYCOL.

MARK	MANUFACTURER	MODEL	SERVICE	EST. SYSTEM VOLUME (GAL)	TANK VOLUME (GAL)	ASME RATING (PSI)	OPERATING TEMP (°F)	NOTES
ET#1	WESSELS	NLA-35	SNOWMELT	30	9	125	140	1

DIFFUSER, REGISTER, & GRILLE SCHEDULE

NOTES:
1. CONTRACTOR IS RESPONSIBLE TO VERIFY LOCATIONS, INSTALLATION METHODS, AND QUANTITIES PRIOR TO ORDERING MATERIALS.
2. VERIFY FRAME TYPE: PLASTER OR LAY-IN FRAME.
3. MANUFACTURERS OPTIONAL INSULATED ALUMINUM PLENUM BOX.
4. PROVIDE TRM MOUNTING FRAME.
5. PROVIDE MANUFACTURERS REMOTE DAMPER.

MARK	MANUFACTURER	MODEL	LOCATION	AIR	TYPE	FEATURES	DAMPER	MAX STATIC P.D. (IN WG)	FINISH	NOTES
A	TITUS	TMS	LAY-IN CEILING	SUPPLY	DIFFUSER	24"x24", NECK SIZE ON PLAN	N	0.1	WHITE	1,2
B	TITUS	TMS	LAY-IN CEILING	SUPPLY	DIFFUSER	12"x12", NECK SIZE ON PLAN	N	0.1	WHITE	1,2,4
C	TITUS	272RL	SURFACE	SUPPLY	REGISTER	SIZE ON PLAN	N	0.1	WHITE	1,2
AA	TITUS	50F	LAY-IN CEILING	RETURN	GRILLE	SIZE ON PLAN	N	0.1	WHITE	1,2
BB	TITUS	50F	LAY-IN CEILING	RETURN	GRILLE	SIZE ON PLAN	N	0.1	WHITE	1,2
EE	TITUS	50F	LAY-IN CEILING	EXHAUST	GRILLE	SIZE ON PLAN	N	0.1	WHITE	1,2

SPLIT SYSTEM COOLING OUTDOOR UNIT SCHEDULE

NOTES:
1. MAINTAIN MANUFACTURERS RECOMMENDATIONS FOR SERVICE ACCESS TO UNIT. PROVIDE MANUFACTURERS REFRIGERANT LINE SETS, PROVIDE CUSTOM SIZING AS REQUIRED FOR...
2. INSTALL CONDENSING UNIT WITH RUBBER SUPPORT BLOCKS, MAINTAIN MANUFACTURER REQUIRED CLEARANCES.
3. LOW AMBIENT KIT FOR OPERATION DOWN TO -20°F.

MARK	MANUFACTURER	MODEL	NOMINAL CAPACITY (TONS)	REFRIGERANT TYPE	CAPACITY		ELECTRICAL DATA					WEIGHT (LBS)	NOTES
					CLG (MBH)	SEER /EER	VOLTS	PHASE	FLA	MCA	MOCP		
CUI#3	CARRIER	PUY-A18NKA7	1.5	R454B	18	19.5	208	1	12.8	16	30	218	1,2

SPLIT SYSTEM COOLING INDOOR UNIT SCHEDULE

NOTES:
1. PROVIDE WIRED WALL THERMOSTAT AND INTEGRAL CONDENSATE PUMP.

MARK	MANUFACTURER	MODEL	TYPE	CAP (MBH)	FAN DATA CFM	ELECTRICAL DATA				WEIGHT (LBS)	NOTES
						VOLTS	PHASE	FLA	MCA		
AC#1	MITSUBISHI	PKA-A18GA	WALL	18	425	208	1	0.1	16	28	1

HTG architects

www.htg-architects.com
Minneapolis Bismarck

1010 Mainstreet, Suite 100
Hopkins, MN 55343
Tel: 952.278.8880

PROJECT

MAYO EMPLOYEES
FEDERAL CREDIT UNION

NEW BUILDING

605 WEST AVE S.
LA CROSSE, WI

ISSUED SET 2026-03-27
REVISIONS

DATE	NO	

I hereby certify that this plan, specification or report was prepared by me or under my direct supervision and that I am a duly Licensed Professional Engineer under the laws of the state of Minnesota

Reg No. Date

emanuelson-podas
consulting engineers

Emanuelson-Podas, Inc.
7705 Bush Lake Road
Edina, MN 55439

(952) 930-0050 | www.epinc.com

MECHANICAL SCHEDULES

Drawn By: JB & DM Checked By: JH

M7.1

3392.0002

COPYRIGHT © HTG ARCHITECTS

Autodesk Docs://3392.0002 Mayo EFCU - Lacrosse WI/Mayo EFCU_Lacrosse WI_MEP_2025.rvt
3/26/2026 8:21:03 PM

SEQUENCE OF OPERATION:

1.1 SNOWMELT SYSTEM

A. BAS SHALL INTERFACE WITH FACTORY PROVIDED BOILER CONTROLLER THROUGH BACNET COMMUNICATION TO MONITOR SYSTEM.

B. BOILERS, **B-1**

1. BOILERS SHALL OPERATE, AND SEQUENCE BASED ON CONTROLS PROVIDED WITH BOILERS. BUILDING CONTROL SYSTEM SHALL ENABLE/DISABLE BOILER SYSTEM, SET SUPPLY WATER TEMPERATURES, MONITOR AND DISPLAY ALARMS. COORDINATE BAS CONTROLS INSTALLATION WITH BOILER SUPPLIED CONTROLS.
2. INPUT DEVICES:
   a. OUTSIDE AIR TEMPERATURE SENSOR.
   b. SLAB MOISTURE SENSOR.
   c. SLAB TEMPERATURE SENSOR.
   d. SNOWMELT SUPPLY WATER TEMPERATURE SENSORS.
   e. SNOWMELT RETURN WATER TEMPERATURE SENSORS.
3. ACTION:
   a. ENABLE BOILER SYSTEM WHEN OUTSIDE AIR TEMPERATURE AND THE SLAB TEMPERATURE ARE BELOW 35°F (ADJ.).
   b. IF SNOW/MOISTURE IS DETECTED FROM ANY ZONE SLAB MOISTURE SENSOR, PUMP SHALL RUN CONTINUOUSLY. OPEN THE AFFECTED ZONE CONTROL VALVE.
   c. THE BOILER SHALL MODULATE THE OUTPUT TO MAINTAIN SUPPLY WATER TEMPERATURE OF 110°F (ADJ.) IN THE SNOW MELT LOOP UNTIL SLAB MOISTURE SENSOR IS SATISFIED.
   d. ONCE THE ZONE SLAB MOISTURE SENSOR IS SATISFIED CLOSE THE ZONE CONTROL VALVE.
   e. DEACTIVATE THE SNOW MELT SYSTEM ONCE ALL ZONE MOISTURE SENSORS ARE SATISFIED.

C. BUILDING CIRCULATING PUMPS, **P-1**:
1. PUMP CONTROL (VARIABLE SPEED):
   a. ACTIVATE LEAD PUMP AT MINIMUM SPEED WHENEVER A BOILER SYSTEM IS ACTIVATED.
   b. PUMP SHALL MODULATE FROM INTERNAL, PUMP CURVES PRE-PROGRAMMED AT FACTORY. SET PUMP OPERATION TO CONSTANT PRESSURE CURVE. INTERNAL CONTROLS SHALL MODULATE ECM OUTPUT TO MAINTAIN DIFFERENTIAL PRESSURE. CONTROLLER SHALL MONITOR PUMP SPEED AND DISPLAY ON GRAPHICS.
   c. ACTIVATE STANDBY PUMP UPON A FAILURE OF PRIMARY PUMP STATUS AND ALARM ON THE BAS.

D. . HYDRONIC FLUSHING
1. BAS SHALL HAVE THE FOLLOWING COMMANDS:
   a. CLOSE ALL TERMINAL EQUIMENT (NON-AHU) CONTROL VALVES
   b. OPEN ALL TERMINAL EQUIMENT (NON-AHU) CONTROL VALVES
   c. RELINQUISH ALL TERMINAL EQUIMENT (NON-AHU) CONTROL VALVE

E. ALARMS:
1. BOILER FAILURE: BOILER IS COMMANDED ON BUT IS OFF
2. BOILER RUNNING IN HAND: BOILER IS COMMANDED OFF BUT IS ON
3. HIGH SUPPLY WATER TEMPERATURE: >10°F (ADJ.) ABOVE SETPOINT
4. LOW SUPPLY WATER TEMPERATURE: >10°F (ADJ.) BELOW SETPOINT
5. PUMP FAILURE: PUMP IS COMMANDED ON BUT IS OFF
6. PUMP RUNNING IN HAND: PUMP IS COMMANDED OFF BUT IS ON
7. ZONE VALVE FAILURE: VALVE IS COMMANDED OPEN BUT IS CLOSED
8. ZONE VALVE IN HAND: VALVE IS COMMANDED CLOSED BUT IS OPEN

POINTS LIST: SNOWMELT SYSTEMS

POINT NAME	HARDWARE POINTS AI	AO	BI	BO	SOFTWARE POINTS AV	BV	BACNET	LOOP	SCHED	TREND	ALARM	SHOW ON GRAPHIC
HOT WATER RETURN TEMPERATURE	X									X	X	X
HOT WATER SUPPLY TEMPERATURE	X									X	X	X
HOT WATER DIFFERENTIAL PRESSURE	X									X	X	X
SLAB MOISTURE SENSOR	X									X	X	X
SLAB TEMPERATURE	X									X	X	X
PUMP 1 ECM SPEED		X								X		X
ZONE 1 VALVE		X								X		X
ZONE 2 VALVE		X								X		X
PUMP 1 STATUS			X							X	X	X
PUMP 1 START / STOP				X						X		X
DIFFERENTIAL PRESSURE SETPOINT					X					X		X
OUTSIDE AIR TEMPERATURE					X					X	X	X
SLAB TEMPERATURE SET POINT					X					X	X	X
SUPPLY WATER TEMPERATURE SETPOINT					X					X		X
CURRENT MODE						X			X		X	
BOILER							X				X	X

POINT NAME	HARDWARE POINTS AI	AO	BI	BO	SOFTWARE POINTS AV	BV	LOOP	SCHED	TREND	ALARM	SHOW ON GRAPHIC
BOILER FAILURE										X	
BOILER RUNING IN HAND										X	
PUMP 1 FAILURE										X	
PUMP 1 RUNNING IN HAND										X	
ZONE VALVE 1-2 FAILURE										X	
ZONE VALVE 1-2 IN HAND										X	
HIGH HOT WATER SUPPLY TEMPERATURE										X	
LOW HOT WATER SUPPLY TEMPERATURE										X	
BOILER INTERFACE MONITOR: CURRENT BOILER STATUS AND OPERATING CONDITIONS WILL BE MONITORED THROUGH ITS COMMUNICATIONS INTERFACE PORT. THE BACNET INTERFACE WILL MONITOR AND TREND THE POINTS AS SHOWN ON THE POINTS LIST.											
BURNER CYCLES					X						X
HOT WATER RETURN TEMP					X				X		X
HOT WATER SUPPLY TEMP					X				X		X
HOT WATER SUPPLY TEMP SETPOINT					X				X		X
OPERATING HOURS					X						X
OPERATING PRESSURE					X				X		X
OPERATING TEMP					X				X		X
BOILER STATUS						X			X		X
HOT WATER FLOW STATUS			X						X		X

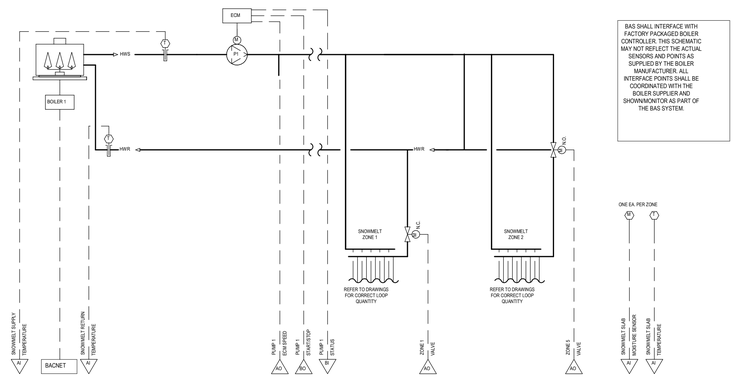

BAS SHALL INTERFACE WITH FACTORY PACKAGED BOILER CONTROLLER. THIS SCHEMATIC MAY NOT REFLECT THE ACTUAL SENSORS AND POINTS AS SUPPLIED BY THE BOILER MANUFACTURER. ALL INTERFACE POINTS SHALL BE COORDINATED WITH THE BOILER SUPPLIER AND SHOWN/MONITOR AS PART OF THE BAS SYSTEM.

1 CONTROL DIAGRAM: SNOW MELT - HYDRONIC

NO SCALE

HTG architects

www.htg-architects.com

Minneapolis Bismarck

1010 Mainstreet, Suite 100
Hopkins, MN 55343
Tel: 952.278.8880

PROJECT

MAYO EMPLOYEES FEDERAL CREDIT UNION

NEW BUILDING

605 WEST AVE S.
LA CROSSE, WI

ISSUED SET 2026-03-27

REVISIONS

DATE NO

I hereby certify that this plan, specification or report was prepared by me or under my direct supervision and that I am a duly Licensed Professional Engineer under the laws of the state of Minnesota

Reg No. Date

emanuelson-podas consulting engineers

Emanuelson-Podas, Inc.
7705 Bush Lake Road
Edina, MN 55439

(952) 930-0050 | www.epinc.com

MECHANICAL CONTROLS

Drawn By: JB & DM Checked By: JH

M8.1

3392.0002

COPYRIGHT © HTG ARCHITECTS

Autodesk Docs://3392.0002/Mayo EFCU - Lacrosse WI/Mayo EFCU_Lacrosse WI_MEP_2025.rvt

3/26/2026 8:21:04 PM

ELECTRICAL ABBREVIATIONS

1P	1 POLE (NUMBER DENOTES QUANTITY)
1P1W	1 POLE, 1 WIRE (NUMBER DENOTES QUANTITY)
2W	2 WIRE (NUMBER DENOTES QUANTITY)
72"	MOUNTING HEIGHT (CENTERLINE TO FLOOR OR GRADE)
A	AMPERE
AC	ABOVE COUNTER
AF	AMP FRAME
AFCI	ARC FAULT CIRCUIT INTERRUPTER
AFF	ABOVE FINISHED FLOOR
AIC	AMPERE INTERRUPTING CAPACITY
AL	ALUMINUM
ARCH	ARCHITECT(URAL)
AS	AMP SWITCH
AT	AMP TRIP
ATS	AUTOMATIC TRANSFER SWITCH
AV	AUDIO VISUAL
AWG	AMERICAN WIRE GAUGE
BCE	BUILDING CONTROLLER ENCLOSURE
BLDG	BUILDING
C	CONDUIT
CATV	CABLE TELEVISION
CB	CIRCUIT BREAKER
CCTV	CLOSED CIRCUIT TELEVISION
CD	CANDELA
CKT	CIRCUIT
CLG	CEILING
CONN	CONNECTION
CONT	CONTINU(E) (OUS) (ED) (ATION)
CONTR	CONTRACTOR
CP	CORD AND PLUG
CT	CURRENT TRANSFORMER
CTE	CONNECT TO EXISTING
CU	COPPER
DC	DIRECT CURRENT
DISC	DISCONNECT
DOWN	DOWN
DSD	DUCT SMOKE DETECTOR
DWG	DRAWING
Δ	DELTA
EC	ELECTRICAL CONTRACTOR
EMT	ELECTRICAL METALLIC TUBING
EOL	END OF LINE
EWC	ELECTRIC WATER COOLER
EXIST	EXISTING
FA	FIRE ALARM
FBO	FURNISHED BY OTHERS
FLA	FULL LOAD AMPS
FMC	FLEXIBLE METALLIC CONDUIT
FUSW	FUSE/SWITCH RATINGS (AMPS)
GC	GENERAL CONTRACTOR
GFCI	GROUND FAULT CIRCUIT INTERRUPTER
GFPE	GROUND FAULT PROTECTION EQUIPMENT
GND	GROUND
GRC	GALVANIZED RIGID CONDUIT
HOA	HAND-OFF-AUTO SWITCH
HP	HORSEPOWER
HVAC	HEATING, VENTILATING, AND AIR CONDITIONING
HZ	HERTZ
IAM	INDIVIDUAL ADDRESSABLE MODULE
IG	ISOLATED GROUND
IMC	INTERMEDIATE METALLIC CONDUIT
JB	JUNCTION BOX
KCMIL	THOUSAND CIRCULAR MILS

ELECTRICAL ABBREVIATIONS

KVA	KILOVOLT AMPERE
KVAR	KILOVOLT AMPERE REACTIVE
KW	KILOWATT
LCT	LOAD CENTER TYPE
LFMC	LIQUID TIGHT FLEXIBLE METALLIC CONDUIT
LFNC	LIQUID TIGHT FLEXIBLE NONMETALLIC CONDUIT
LTG	LIGHTING
MAG	MAGNETIC
MAX	MAXIMUM
MC	METAL CLAD CABLE
MCA	MINIMUM CIRCUIT AMPS
MCB	MAIN CIRCUIT BREAKER
MCC	MOTOR CONTROL CENTER
MDP	MAIN DISTRIBUTION PANEL
MIN	MINIMUM
MISC	MISCELLANEOUS
MLO	MAIN LUGS ONLY
MOCP	MAXIMUM OVERCURRENT PROTECTION
MTS	MANUAL TRANSFER SWITCH
#	NUMBER
N/A	NOT APPLICABLE
NC	NORMALLY CLOSED
NEC	NATIONAL ELECTRICAL CODE
NIC	NOT IN CONTRACT
NL	NIGHT LIGHT
NO	NORMALLY OPEN
NTS	NOT TO SCALE
OL	OVERLOAD
P	POLE
PB	PULL BOX
PIV	POST INDICATING VALVE
PNL	PANEL
PR	PAIR
PRI	PRIMARY
PT	POTENTIAL TRANSFORMER
PVC	POLYVINYL CHLORIDE CONDUIT
PWR	POWER
Ø OR PH	PHASE
REQ	REQUIRED
RSC	RIGID STEEL CONDUIT
SCCR	SHORT CIRCUIT CURRENT RATING
SEC	SECONDARY
SIG	SIGNAL
SP	SPARE
SS	STAINLESS STEEL
SSNR	SOFT START NON-REVERSING
SSR	SOFT START REVERSING
STP	SHIELDED TWISTED PAIR
SW	SWITCH
SWBD	SWITCHBOARD
T-STAT	THERMOSTAT
TT	THERMAL TOGGLE
TYP	TYPICAL
UG	UNDERGROUND
UTP	UNSHIELDED TWISTED PAIR
V	VOLT
VFD	VARIABLE FREQUENCY DRIVE
W	WATT
WP	WEATHERPROOF
XFMR	TRANSFORMER
Y	WYE

ELECTRICAL SYMBOL LEGEND

POWER

SYMBOL	DESCRIPTION	MTG HT
XX / XX	RECEPTACLE TYPE LEGEND WP = WEATHERPROOF SS = STAINLESS STEEL FACEPLACE GFCI = GROUND FAULT USB = USB TYPE RECEPTACLE T = TAMPERPROOF RECEPTACLE H = HOSPITAL GRADE RECEPTACLE	18"
	FOURPLEX RECEPTACLE	18"
	SIMPLEX RECEPTACLE	18"
	CEILING MOUNTED DUPLEX RECEPTACLE	CEILING
	DUPLEX RECEPTACLE, LOWER SWITCHED	18"
	FOURPLEX RECEPTACLE, SWITCHED	18"
	DUPLEX RECEPTACLE, SWITCHED	18"
	HORIZONTAL MOUNT DUPLEX RECEPTACLE	18"
XX	SPECIAL PURPOSE RECEPTACLE - LETTER INDICATES TYPE - SEE NOTE 3	18"
XX	CEILING MOUNT SPECIAL PURPOSE RECEPTACLE - LETTER INDICATES TYPE - SEE NOTE 3	CEILING
	DUPLEX RECEPTACLE, EMERGENCY CIRCUIT	18"
	FOURPLEX RECEPTACLE, EMERGENCY CIRCUIT	18"
	RECESSED JUNCTION BOX W/ FLEX CONNECTION	
XX	RECESSED JUNCTION BOX - LETTER INDICATES TYPE - SEE NOTE 4	CEILING
XX	SURFACE MOUNTED JUNCTION BOX - LETTER INDICATES TYPE - SEE NOTE 4	CEILING
XX	RECESSED JUNCTION BOX, WAL - LETTER INDICATES TYPE - SEE NOTE 4	18"
XX	SURFACE MOUNTED JUNCTION BOX, WALL - LETTER INDICATES TYPE - SEE NOTE 4	18"
	FLOOR BOX WITH DEVICES INDICATED	FLOOR
PB	PULLBOX SIZED AS REQUIRED OR NOTED	

POWER DISTRIBUTION

SYMBOL	DESCRIPTION	MTG HT
	GENERATOR - SIZE VARIES	
	TRANSFORMER - SIZE VARIES	
	PANELBOARD	WALL OR FLOOR
	SWITCHBOARD/DISTRIBUTION PANELBOARD	WALL OR FLOOR
	GROUND	
M	METER	
MH	MANHOLE	
HH	HANDHOLE	
ATS	AUTOMATIC TRANSFER SWITCH	

MOTORS

SYMBOL	DESCRIPTION	MTG HT
H	PUSHBUTTON - SINGLE	
H	PUSHBUTTON - DOUBLE	
H	PUSHBUTTON - TRIPLE	
S_M	MOTOR RATED TOGGLE SWITCH	
S_F	SWITCH / FUSE ASSEMBLY	
S_T	SWITCH / THERMAL OVERLOAD	
	COMBO MOTOR STARTER / DISCONNECT SWITCH	60"
	MOTOR	
XXX-###	EQUIPMENT W/ELECTRICAL CONNECTION, REFER TO MOTOR SCHEDULE. (MECHANICAL, FOOD SERVICE, ETC.)	
	NON-FUSED DISCONNECT SWITCH	54"
F	FUSED DISCONNECT SWITCH	54"
	MOTOR STARTER	54"
	MUSHROOM HEAD PUSHBUTTON	
	EQUIPMENT CONNECTION	

LIGHTING CONTROLS

SYMBOL	DESCRIPTION	MTG HT
xx $	LIGHTING CONTROL TYPE LEGEND X = SINGLE POLE SWITCH X DENOTES SWITCH LEG 2 = DOUBLE POLE SWITCH 3 = 3-WAY SWITCH 4 = 4-WAY SWITCH EP = EXPLOSION PROOF SWITCH E = EMERGENCY SWITCH LV = LOW VOLTAGE SWITCH PL = PILOT LIGHT SWITCH K = KEY OPERATED SWITCH L = LIGHTED TOGGLE SWITCH MC = MOMENTARY CONTACT SWITCH VS = WALL SENSOR VACANCY SWITCH OS = WALL SENSOR OCCUPANCY SENSOR	46"
x	LIGHTING CONTROL - "X" DENOTES TYPE TYPE A: LINE VOLTAGE DUAL TECHNOLOGY OCCUPANCY SENSOR WITH INTEGRAL 0-10V AND RAISE/LOWER BUTTONS TYPE D: DIGITAL DIMMER. TYPE P: DIGITAL 4-SCENE PRESET SWITCH W/ RAISE/LOWER CONTROL. TYPE S: DIGITAL 2-BUTTON ON/OFF SWITCH.	46"
XX CEILING / XX WALL	LIGHTING CONTROL TYPE LEGEND R = LINE VOLTAGE RELAY TS = TIME SWITCH C = CONTACTOR CL = CURRENT LIMITER VS = VACANCY SENSOR OS = OCCUPANCY SENSOR RC = ROOM CONTROLLER PS = PHOTOSENSOR ER = EMERGENCY BYPASS RELAY B = REMOTE BALLAST / DRIVER BAT = REMOTE BATTERY	

LIGHTING

SYMBOL	DESCRIPTION	MTG HT
	FIXTURE RECESSED MOUNTED	CEILING
	FIXTURE SURFACE MOUNTED	CEILING
	PENDANT MOUNTED STRIP FIXTURE	
	WALL MOUNTED STRIP FIXTURE	WALL
	DOWN LIGHT FIXTURE	CEILING
	WALL MOUNTED FIXTURE	WALL
	PENDANT FIXTURE	
	TRACK LIGHTING, HEADS SPACED AS INDICATED	
	LIGHT FIXTURE ON EMERGENCY CIRCUIT	
	EXIT LIGHT FACE DIRECTIONAL ARROWS AS INDICATED	WALL
	EXIT LIGHT FACE DIRECTIONAL ARROWS AS INDICATED	CEILING
	EXIT LIGHT WITH EMERGENCY HEADS DIRECTIONAL ARROWS AS INDICATED	WALL
	EXIT LIGHT WITH EMERGENCY HEADS DIRECTIONAL ARROWS AS INDICATED	CEILING
	SELF-CONTAINED EMERGENCY LIGHTING UNIT	WALL
	SELF-CONTAINED EMERGENCY LIGHTING UNIT	CEILING
	EXTERIOR POLE MOUNTED FIXTURE	GRADE
	EXTERIOR BOLLARD FIXTURE	GRADE

CABLING

SYMBOL	DESCRIPTION	MTG HT
	WIRE, CONDUIT PER SPECIFICATIONS	
	WIRE IN OR BELOW SLAB OR UNDER GROUND (UG), CONDUIT PER SPECIFICATIONS	
	WIRE COUNTS WHEN MORE THAN 2 WIRES IN CONDUIT PLUS GROUND	
	HOME RUN	
	CONDUIT SLEEVE	
	CONDUIT STUB	

COMMUNICATIONS / DATA

SYMBOL	DESCRIPTION	MTG HT
	TELEPHONE CABINET - SIZE AS INDICATED	
	RACK - SIZE AS INDICATED	
	COMMUNICATIONS BOARD - SIZE AS INDICATED	
	FLOOR BOX	
	TELEPHONE	18"
W	TELEPHONE - WALL HUNG	46"
	COMBINATION PHONE/DATA OUTLET	18"
	DATA OUTLET	18"
C	DATA - CEILING MOUNTED	CLG
H	HANDSET	
X	WALL CLOCK TYPE LEGEND M = MASTER CLOCK D = DUAL FACE CLOCK C = CLOCK OUTLET NONE = STANDARD WALL CLOCK	94"
S	SPEAKER - WALL MOUNTED	
S	SPEAKER - CEILING MOUNTED	94"
SR	SOUND REINFORCEMENT - CEILING MOUNTED	
	WALL/FLOOR COMMUNICATIONS DEVICE A = AUDIO OUTLET H = HORN IC = CALL STATION M = MICROPHONE MA = MICROPHONE REMOTE ANTENNA MM = MULTIMEDIA OUTLET P = PROJECTOR RS = ROOM SCHEDULER WM = WIRELESS MICROPHONE SYSTEM	
	CEILING COMMUNICATIONS DEVICE A = AUDIO OUTLET H = HORN IC = CALL STATION M = MICROPHONE MA = MICROPHONE REMOTE ANTENNA MM = MULTIMEDIA OUTLET P = PROJECTOR RS = ROOM SCHEDULER WM = WIRELESS MICROPHONE SYSTEM	
X	WALL COMMUNICATIONS DEVICE SC = SCREEN CONTROLLER TV = TV OUTLET V = VOLUME CONTROL	
X	CEILING COMMUNICATIONS DEVICE M = MICROPHONE OUTLET SC = SCREEN CONTROLLER TERMINATION BOX TV = TV OUTLET	
	BUZZER	
S	BUZZER/STROBE	
	BELL	
C	CHIME	44"
RP	RESCUE ASSIST CALL STATION	
RAP	RESCUE ASSIST ZONE ANNUNCIATOR	
RPB	RESCUE ASSIST POWER SUPPLY WITH PHONE INTERFACE	

SECURITY

SYMBOL	DESCRIPTION	MTG HT
H	SECURITY CALL BUTTON	
	SECURITY ALARM PUSHBUTTON (DURESS BUTTON)	
S	ELECTRIC STRIKE	
L	ELECTRIC LATCH	
MC	SECURITY MAGNETIC CONTACT	
MS	SECURITY MOTION SENSOR - REQUEST TO EXIT	
IC	FACILITY INTERCOM	46"
K	SECURITY KEYPAD	46"
CR	SECURITY CARD READER	46"
	INDICATOR LIGHT - CEILING MOUNTED	
	INDICATOR LIGHT - WALL MOUNTED	
S	PAGING HORN	
	CCTV CAMERA - CEILING MOUNTED	
	CCTV CAMERA - WALL MOUNTED	
VM	VIDEO MONITOR	
EM	EMERGENCY PHONE - WALL MOUNTED	
EM	EMERGENCY PHONE - BOLLARD MOUNTED	
A	ALARM	

FIRE ALARM

SYMBOL	DESCRIPTION	MTG HT
FACP	FIRE ALARM CONTROL PANEL	
FAA	REMOTE FIRE ALARM ANNUNCIATOR PANEL	
BAT	FIRE ALARM BATTERY CABINET	
AUX	FIRE ALARM AUXILIARY CABINET	
NAC	FIRE ALARM NAC PANEL	
EH	MAGNETIC DOOR HOLD OPEN	
P	FIRE ALARM BELL AND LIGHT	90"
F	FIRE ALARM HORN, WALL MOUNT	82"
F M or L	FIRE ALARM MINI HORN (M), LOW TONE (L), WALL MOUNT	82"
F	FIRE ALARM SPEAKER	82"
F ##	FIRE ALARM STROBE ## DENOTES CANDELA RATING	82"
F ##	FIRE ALARM HORN/STROBE ## DENOTES CANDELA RATING	82"
F ##	FIRE ALARM SPEAKER/STROBE ## DENOTES CANDELA RATING	82"
F	FIRE ALARM HORN, CEILING	CEILING
F M or L	FIRE ALARM MINI HORN (M), LOW TONE (L), CEILING MOUNT	CEILING
F	FIRE ALARM SPEAKER, CEILING	CEILING
F ##	FIRE ALARM STROBE, CEILING ## DENOTES CANDELA RATING	CEILING
F ##	FIRE ALARM HORN/STROBE, CEILING ## DENOTES CANDELA RATING	CEILING
F ##	FIRE ALARM SPEAKER/STROBE, CEILING ## DENOTES CANDELA RATING	CEILING
FS	COMBINATION FIRE/SMOKE DAMPER	
S	SMOKE DAMPER	
Z	FIRE ALARM ADDRESSABLE MODULE	
FR	FIRE ALARM RELAY MODULE	
F	FIRE ALARM MANUAL PULL STATION	44"
	FIRE ALARM SMOKE DETECTOR PHOTOELECTRIC TYPE CEILING MOUNT	CEILING
	FIRE ALARM SMOKE DETECTOR IONIZATION TYPE CEILING MOUNT	CEILING
	CARBON MONOXIDE DETECTOR CEILING MOUNT	CEILING
	MULTI CRITERIA DETECTOR CEILING MOUNT	CEILING
	FIRE ALARM DUCT SMOKE DETECTOR	
135	FIRE ALARM HEAT DETECTOR CEILING MOUNT 135 = 135 DEG. FIXED HEAT DETECTOR 200 = 200 DEG. FIXED HEAT DETECTOR ROR = 135 DEG. RATE OF RISE HEAT DETECTOR	CEILING
	FIRE ALARM SMOKE DETECTOR PHOTOELECTRIC TYPE WALL MOUNT	
	FIRE ALARM SMOKE DETECTOR IONIZATION TYPE WALL MOUNT	
	CARBON MONOXIDE DETECTOR WALL MOUNT	
	MULTI CRITERIA DETECTOR WALL MOUNT	
	FIRE ALARM BEAM DETECTOR - TRANSMITTER	
	FIRE ALARM BEAM DETECTOR - RECEIVER	
135	FIRE ALARM HEAT DETECTOR WALL TYPE 135 = 135 DEG. FIXED HEAT DETECTOR 200 = 200 DEG. FIXED HEAT DETECTOR ROR = 135 DEG. RATE OF RISE HEAT DETECTOR	
FS	FIRE SPRINKLER TAMPER SWITCH	
FL	FIRE SPRINKLER FLOW SWITCH	
PIV	FIRE SPRINKLER POST INDICATOR VALVE (PIV)	

NOTES:

1. THESE SYMBOLS COMPRISE A STANDARD LIST; ALL SYMBOLS MAY NOT APPEAR ON THIS PROJECT.
2. MOUNTING HEIGHTS SHOWN ARE STANDARD AND SHALL BE USED UNLESS INDICATED OTHERWISE ELSEWHERE IN THE DRAWINGS. MOUNTING HEIGHTS ARE TO CENTERLINE OF DEVICE UNLESS NOTED OTHERWISE.
3. RECEPTACLE LEGEND:
   C = DATA RACK RECEPTACLE - NEMA L5-30R - MH = CEILING - FEEDER: 10-10-1/2"
   D = DRYER - NEMA 14-30R - MH = 24" - FEEDER: 8-10-3/4"
   R = RANGE - NEMA 14-50R - MH = 6" - FEEDER: 6-10-3/4"
4. OCCUPANCY SENSOR LEGEND:
   - P1 = DIGITAL PASSIVE INFRARED
   - P2 = NON-DIGITAL DUAL - TECHNOLOGY
   - P3 = NON-DIGITAL PASSIVE INFRARED COLD WEATHER
   - P4 = DIGITAL PASSIVE INFRARED HIGH-BAY
   - U1 = DIGITAL ULTRASONIC
   - U2 = NON-DIGITAL ULTRASONIC
   - DT1 = DIGITAL DUAL - TECHNOLOGY
   - DT2 = NON-DIGITAL DUAL-TECHNOLOGY
   - DT3 = DIGITAL DUAL-TECHNOLOGY ADJUSTABLE MOUNT

ELECTRICAL SHEET INDEX

E0.0	ELECTRICAL TITLE SHEET
E0.1	ELECTRICAL GENERAL NOTES
E0.2	SITE PLAN - PHOTOMETRICS
E0.3	SITE PLAN - ELECTRICAL LIGHT FIXTURES DESCRIPTIONS
E0.4	SITE PLAN - ELECTRICAL
E1.1	MAIN LEVEL PLAN - LIGHTING
E1.2	CLERESTORY LEVEL PLAN - LIGHTING
E2.1	MAIN LEVEL PLAN - POWER
E2.2	CLERESTORY LEVEL PLAN - POWER
E3.1	ELECTRICAL DETAILS
E3.2	ENERGY COMPLIANCE FORMS
E3.3	ENERGY COMPLIANCE FORMS
E4.1	ELECTRICAL SCHEDULES
E4.2	ELECTRICAL SCHEDULES
T1.1	MAIN LEVEL PLAN - TECHNOLOGY

HTG architects

www.htg-architects.com
Minneapolis Bismarck

1010 Mainstreet, Suite 100
Hopkins, MN 55343
Tel: 952.278.8880

PROJECT

MAYO EMPLOYEES FEDERAL CREDIT UNION

NEW BUILDING
605 WEST AVE S.
LA CROSSE, WI

ISSUED SET 2026-03-27
REVISIONS

DATE	NO	

I hereby certify that this plan, specification or report was prepared by me or under my direct supervision and that I am a duly Licensed Professional Engineer under the laws of the state of Minnesota

Matthew W. Fults

40887 2026-03-27
Reg No. Date

emanuelson-podas consulting engineers
Emanuelson-Podas, Inc.
7705 Bush Lake Road
Edina, MN 55439
(952) 930-0050 | www.epinc.com

ELECTRICAL TITLE SHEET

Drawn By: FSB Checked By: KDM

E0.0

3392.0002

COPYRIGHT © HTG ARCHITECTS

Autodesk Docs://3392.0002 Mayo EFCU - Lacrosse WI/Mayo EFCU_Lacrosse WI_MEP_2025.rvt
3/26/2026 7:16:12 PM

ELECTRICAL GENERAL NOTES

1 ANY ELECTRICAL BOX THAT BECOMES ABANDONED DURING THE COURSE OF THE PROJECT SHALL HAVE A BLANK COVERPLATE.

2 WHERE OTHER ELECTRICAL DEVICES ARE LOCATED ADJACENT TO LIGHT SWITCHES, MOUNT ALL DEVICES AT THE SAME CENTER LINE ELEVATION.

3 ALIGN DEVICES VERTICALLY WHERE DEVICES OF DIFFERENT MOUNTING HEIGHTS ARE INDICATED CLOSE TO OTHER DEVICES.

4 DO NOT SCALE DRAWINGS. VERIFY DIMENSIONS IN FIELD PRIOR TO COMMENCEMENT OF WORK.

5 ALL EMPTY RACEWAY SYSTEMS SHALL HAVE A PULLWIRE OR EQUAL AND SHALL BE IDENTIFIED AT ALL JUNCTION, PULL, AND TERMINATION POINTS, USING PERMANENT METALLIC TAGS. TAG SHALL INDICATE INTENDED USE OF CONDUIT, ORIGINATION AND TERMINATION POINTS OF EACH INDIVIDUAL CONDUIT.

6 IT IS THE INTENT OF THESE DRAWINGS AND SPECIFICATIONS TO ESTABLISH A STANDARD OF QUALITY. THE ENGINEER RESERVES THE RIGHT TO APPROVE METHODS AND MATERIALS NOT REFLECTED HEREIN.

7 CONTRACTOR SHALL VISIT SITE PRIOR TO BID AND VERIFY THAT CONDITIONS ARE AS INDICATED. CONTRACTOR SHALL INCLUDE IN HIS BID, COSTS REQUIRED TO MAKE HIS WORK MEET EXISTING CONDITIONS.

8 WORK SHALL BE PERFORMED IN A WORKMANLIKE MANNER TO THE SATISFACTION OF THE ARCHITECT.

9 WORK, MATERIALS AND EQUIPMENT SHALL CONFORM TO THE LATEST EDITIONS OF LOCAL, STATE, AND NATIONAL CODES AND ORDINANCES.

10 PROVIDE PERMITS AND INSPECTIONS REQUIRED.

11 GUARANTEE THE INSTALLATION AGAINST DEFECTS IN MATERIALS AND WORKMANSHIP WHICH MAY OCCUR UNDER NORMAL USAGE FOR A PERIOD OF ONE YEAR AFTER OWNER'S ACCEPTANCE. DEFECTS SHALL BE PROMPTLY REMEDIED WITHOUT COST TO THE OWNER.

12 VERIFY THE EXACT LOCATION OF EQUIPMENT TO BE FURNISHED BY OTHERS PRIOR TO ROUGH-IN.

13 SYSTEMS SHALL BE TESTED FOR PROPER OPERATION. IF TESTS SHOW THAT WORK IS DEFECTIVE, CONTRACTOR SHALL MAKE CORRECTIONS NECESSARY AT NO COST TO OWNER.

14 PROVIDE EXTERIOR PULL BOXES AND HANDHOLES AS REQUIRED TO COMPLETE WORK INDICATED. SPLICES IN EXTERIOR PULL BOXES AND HANDHOLES SHALL BE MADE WATERPROOF USING "SCOTCHCAST" SPLICE KIT OR APPROVED EQUAL. SEAL ENDS OF CONDUITS AND DUCTS WITH "DUCTSEAL" OR APPROVED EQUAL.

15 VERIFY EXACT LOCATIONS OF EXISTING AND NEW UNDERGROUND UTILITIES, PIPING, AND RACEWAY SYSTEMS PRIOR TO TRENCHING. PROVIDE NECESSARY TRENCHING, BACKFILL, EXCAVATION, SUPPORTS, SERVICE FEEDERS (CONDUIT AND/OR WIRE), PULLBOXES, TRANSFORMER PADS, SAWCUTTING AND PATCHING, CONCRETE/PAVING, ETC. REQUIRED. BACKFILL TRENCHES TO AND PATCH TO MATCH EXISTING. CONTRACTOR SHALL OBTAIN AND VERIFY EXACT UTILITY COMPANY DRAWINGS AND REQUIREMENTS. CONTRACTOR SHALL HAVE ALL UTILITIES LOCATED PRIOR TO WORK.

16 CONTRACTOR SHALL BE RESPONSIBLE FOR REPLACING EQUIPMENT WHICH IS DAMAGED DUE TO INCORRECT FIELD WIRING OR FACTORY WIRING IN EQUIPMENT PROVIDED BY THIS CONTRACTOR.

17 CONTRACTOR'S FAILURE TO ORDER OR RELEASE ORDER FOR MATERIALS AND/OR EQUIPMENT WILL NOT BE ACCEPTED AS A REASON TO SUBSTITUTE ALTERNATE MATERIALS, EQUIPMENT, OR INSTALLATION METHODS.

18 SYSTEMS SHALL BE COMPLETE, OPERABLE, AND READY FOR CONTINUOUS OPERATION. LIGHTS, SWITCHES, RECEPTACLES, MOTORS, ETC. SHALL BE CONNECTED AND OPERABLE.

19 CONDUITS PENETRATING THRU ROOF SHALL BE CONSTRUCTED IN CONFORMANCE WITH ARCHITECTURAL ROOFING SECTION(S) AND "SHEET METAL FLASHING AND TRIM" SECTION 076200.

20 ALL ELECTRICAL SYSTEMS COMPONENTS SHALL BE LISTED OR LABELED BY UL OR OTHER RECOGNIZED TESTING FACILITY.

21 REFER TO ARCHITECTURAL CASEWORK ELEVATIONS FOR ADDITIONAL INFORMATION ON LOCATION OF ELECTRICAL DEVICES MOUNTED IN OR NEAR CASEWORK. COORDINATE MOUNTING HEIGHT AND PLACEMENT OF DEVICES DESIGNATED "AC" (ABOVE COUNTER). REPORT DISCREPANCIES TO ENGINEER PRIOR TO INSTALLATION.

22 PROVIDE FIRE RATED SEALS ON PENETRATIONS IN FIRE RATED FLOORS AND WALLS. REFER TO CODE PLANS FOR RATED FLOOR AND WALL LOCATIONS.

23 PROVIDE ACOUSTICAL SEALANT ON ALL WALL PENETRATIONS. REFER TO ARCHITECTURAL SPECIFICATIONS FOR DETAILS.

24 WHERE CONDUITS ARE INSTALLED EMBEDDED IN CONCRETE POURS, THE OUTSIDE DIAMETER OF THE CONDUITS SHALL NOT EXCEED 1/3 OF THE MINIMUM THICKNESS OF THE SLAB. SHALL BE SPACED NO CLOSER THAN 3 CONDUIT DIAMETERS ON CENTER, AND SHALL NOT CROSS OVER EACH OTHER. CONDUIT SHALL BE INSTALLED IN MIDDLE THIRD OF SLAB. USE APPROVED SUPPORTS FOR CONDUIT.

LIGHTING GENERAL NOTES

1 IN MECHANICAL, ELECTRICAL, AND COMMUNICATION EQUIPMENT ROOMS, CONDUIT FOR LIGHTING FIXTURES MAY BE RUN EXPOSED.

2 LETTER THUS: "A" – INDICATES TYPE OF LIGHTING FIXTURES. REFER TO LIGHTING FIXTURE TYPES AS NOTED ON THE LIGHTING FIXTURE SCHEDULE. CIRCUIT INDICATED THUS: "A/XX" WHERE "XX" INDICATES CIRCUIT NUMBER.

3 COORDINATE MOUNTING HEIGHTS AND LOCATIONS OF FIXTURES IN MECHANICAL ROOMS WITH DUCTS, PIPES, AND EQUIPMENT. MOUNT FIXTURES BELOW DUCTS AND PIPES AND AVOID MOUNTING FIXTURES OVER EQUIPMENT. SUPPORT FIXTURES INDEPENDENTLY OF DUCTS, PIPES, AND EQUIPMENT.

4 LIGHT SWITCHES SHALL BE MOUNTED ON LATCH SIDE OF DOOR WITHIN 12" OF DOOR/SIDELIGHT FRAMING, UNLESS NOTED OTHERWISE. LIGHT SWITCHES INSTALLED ADJACENT TO DOOR SWINGS SHALL BE MOUNTED CLEAR OF DOOR SWING AND WITHIN 12" OF DOOR IN OPEN POSITION. COORDINATE LOCATION WITH OTHER WALL DEVICES.

5 COORDINATE ALL LIGHTING LOCATIONS WITH MECHANICAL DUCTWORK AND PIPING PRIOR TO INSTALLATION.

6 UNLESS SPECIFICALLY NOTED, REFER TO ARCHITECTURAL EXTERIOR ELEVATIONS FOR EXACT EXTERIOR FIXTURE MOUNTING HEIGHTS AND LOCATIONS.

7 REFER TO ARCHITECTURAL ELEVATIONS AND REFLECTED CEILING PLAN FOR EXACT LOCATION OF LIGHTING FIXTURES AND DEVICES.

8 MOUNT ALL EXIT LIGHTS DIRECTLY ABOVE DOOR 1'-0" FROM TOP OF OPENING, WHEREVER POSSIBLE. WHERE CEILINGS ARE 10'-0" OR BELOW, MOUNT IN CEILING ABOVE DOOR. REFER TO DETAIL SHEETS FOR TYPICAL EXIT SIGN MOUNTING.

9 MOUNTING HEIGHTS SHOWN FOR WALL MOUNTED FIXTURES ARE TO CENTER. MOUNTING HEIGHTS SHOWN FOR PENDANT FIXTURES ARE TO BOTTOM OF FIXTURE.

10 OCCUPANCY SENSORS SHALL CONTROL ALL LIGHTS IN ROOM SERVED, UNLESS NOTED OTHERWISE. ELECTRICAL CONTRACTOR TO PROVIDE RELAY PACKS AS REQUIRED FOR DIFFERENT VOLTAGES, CIRCUITS, AND DIMMER CONTROLLED LIGHTS. REFER TO DETAIL SHEETS FOR OCCUPANCY SENSOR WIRING.

11 DO NOT SHARE NEUTRALS ON LIGHTING CIRCUITS.

12 RECESSED LIGHT FIXTURES INSTALLED IN GYP BOARD OR PLASTER CEILINGS SHALL HAVE PLASTER FRAMES INSTALLED PRIOR TO CEILING MATERIAL.

13 RECESSED FIXTURES INSTALLED INDOORS AND IN POTENTIAL CONTACT WITH INSULATION SHALL BE THERMALLY PROTECTED (IC RATED).

14 VERIFY TYPE OF CEILING CONSTRUCTION FOR PROPER MOUNTING OF ALL RECESSED LIGHT FIXTURES. INSTALLATION OF LIGHT FIXTURES SHALL COMPLY WITH ALL INTERNATIONAL BUILDING CODE REQUIREMENTS.

15 PROVIDE TWO INDEPENDENT SUPPORTS FOR ALL RECESSED LIGHT FIXTURES.

16 FIXTURES INDICATED AS BEING ON EMERGENCY SHALL BE PROVIDED WITH SELF-CONTAINED BATTERY POWERED INVERTER UNIT FOR DIRECT MOUNTING IN FIXTURE, UNLESS NOTED OTHERWISE. BATTERY SHALL OPERATE FIXTURE FOR A MINIMUM OF 90 MINUTES. ROUTE UNSWITCHED HOT TO FIXTURE.

17 ALL LIGHTING FIXTURES LOCATED SO AS TO DISRUPT A FIRE RATED CEILING ARE TO BE ENCLOSED OR SURROUNDED IN A FIRE PROTECTION MATERIAL AND FIBER BOARD. PROTECTION MATERIAL IS TO BE INSTALLED AS PER THE FIRE RESISTANCE INDEX. VERIFY WITH ARCHITECTURAL DRAWINGS THE HOUR RATINGS AND TYPE OF CEILINGS TO BE USED.

18 INTERIOR LIGHTING VACANCY AND OCCUPANCY SENSORS SHALL OPERATE WITH A 20 MINUTE DELAY OR LESS.

POWER GENERAL NOTES

1 VERIFY LOCATION OF ALL MOTORS AND EQUIPMENT BEFORE ROUGH-IN. SEE MECHANICAL DRAWINGS FOR LOCATION OF MECHANICAL EQUIPMENT. PROVIDE SERVICE TO AND CONNECT EQUIPMENT AS REQUIRED.

2 ELECTRICAL CONTRACTOR SHALL PROVIDE CONTROLS, INTERLOCKS, ACCESSORIES, ETC., IN MOTOR CONTROL STARTERS AS REQUIRED BY THE TEMPERATURE CONTROL CONTRACTOR. STARTERS SHALL CONTAIN 120V CONTROL TRANSFORMER, PILOT LIGHT, AND PUSHBUTTONS OR SELECTOR SWITCH AS REQUIRED, IN ADDITION TO OTHER ITEMS (AUXILIARY CONTACTS, DOOR SWITCHES, RELAYS, ETC.) REQUIRED. SUBMIT ELEMENTARY CONTROL DIAGRAMS FOR APPROVAL. SUBMITTALS SHALL INCLUDE INDICATION OF PRIOR REVIEW AND ACCEPTANCE BY TEMPERATURE CONTROL CONTRACTOR. REFER TO MECHANICAL DRAWINGS AND TEMPERATURE CONTROL DIAGRAMS FOR ADDITIONAL CONDUIT, WIRE, RELAYS, TRANSFORMERS, CONNECTIONS, ETC. REQUIRED FOR A COMPLETE AND OPERABLE SYSTEM.

3 INTERRUPTING RATINGS NOTED IN SCHEDULES SHALL APPLY TO ENTIRE PANELBOARD AND/OR SWITCHBOARD. ALL EQUIPMENT COMPRISING PANELS AND/OR SWITCHBOARDS SHALL BE FULLY RATED FOR SHORT CIRCUIT CURRENT NOTED.

4 PROVIDE ENGRAVED NAMEPLATES ON SWITCHBOARDS, PANELBOARDS, DISCONNECT SWITCHES, MOTOR CONTROL CENTERS, TRANSFORMERS, ETC., INDICATING EQUIPMENT DESIGNATION (OR DESIGNATION OF EQUIPMENT SERVED) AND VOLTAGE.

5 FINAL CONNECTIONS TO EQUIPMENT SHALL BE PER MANUFACTURER'S APPROVED WIRING DIAGRAMS, DETAILS, AND INSTRUCTIONS. IT SHALL BE THE CONTRACTOR'S RESPONSIBILITY TO PROVIDE MATERIALS AND EQUIPMENT COMPATIBLE WITH EQUIPMENT ACTUALLY SUPPLIED.

6 ADJUST MOUNTING HEIGHTS OF ALL OUTLETS IF REQUIRED SO AS NOT TO INTERFERE WITH RADIATION. VERIFY CHANGES WITH ENGINEER.

7 PANEL DIRECTORIES SHALL BE REMOVABLE. SUBMIT PROPOSED SCHEDULE OF DIRECTORIES TO OWNER FOR APPROVAL. ROOM NAMES AND NUMBERS SHALL BE AS DIRECTED BY OWNER. DIRECTORIES SHALL BE TYPED AND INSTALLED UNDER CLEAR PLASTIC COVERS.

8 ALL WIRING SHALL BE INSTALLED IN LISTED METALLIC RACEWAYS. RACEWAYS IN SLAB-ON-GRADE OR BELOW GRADE SHALL BE SCHEDULE 40 PVC. TRANSITIONS FROM BELOW TO ABOVE GRADE SHALL BE WITH RIGID STEEL ELBOWS WITH PVC JACKET OR PROVIDED EQUAL PROTECTION. EMT FITTINGS SHALL BE MALLEABLE IRON OR STEEL. CONNECTORS SHALL BE INSULATED THROAT TYPE.

9 ALL BRANCH CIRCUIT AND FEEDER CONDUITS SHALL HAVE A CODE SIZED COPPER GROUNDING CONDUCTOR. INCREASE CONDUIT SIZE AS REQUIRED.

10 FINAL CONNECTIONS TO MOTORS, TRANSFORMERS, AND OTHER VIBRATING EQUIPMENT SHALL BE WITH LIQUIDTIGHT FLEX METAL CONDUIT AND FITTINGS. DO NOT SECURE CONDUITS, DISCONNECTS, OR DEVICES TO DUCTWORK OR MECHANICAL EQUIPMENT.

11 BRANCH CIRCUITS RATED 120V, LONGER THAN 75'(CONDUCTOR LENGTH) SHALL BE A MINIMUM WIRE SIZE OF #10 (LINE, NEUTRAL, AND GROUND) THROUGHOUT.

12 PULLBOXES, CABINETS, ETC. MOUNTED ON THE EXTERIOR AT GRADE LEVEL, SHALL BE WEATHERPROOF TYPE WITH HINGED LOCKABLE COVERS SECURED WITH TAMPERPROOF SCREWS.

13 DO NOT SHARE NEUTRALS, EXCEPT ON BREAKERS WITH HANDLE TIES. MULTIWIRE BRANCH CIRCUITS SHALL HAVE HANDLE TIES PER NEC 210. IT SHALL BE THE CONTRACTORS RESPONIBILITY TO COORDINATE HANDLE TIED BREAKERS.

14 POWER RECEPTACLES SHALL BE MOUNTED AT THE SAME ELEVATION AND WITHIN 12" OF THE ADJACENT DATA OR TV ROUGH-IN. REFER TO SYSTEMS PLANS FOR LOCATIONS.

15 PROVIDE INSULATED BUSHINGS OVER CONDUIT ENDS AT ROUGH-IN AND CONDUIT SLEEVE LOCATIONS PRIOR TO INSTALLATION OF ANY CABLING.

16 PROVIDE 120V POWER TO EACH SMOKE, FIRE/SMOKE DAMPER. COORDINATE WITH MECHANICAL FOR EXACT DAMPER LOCATIONS.

17 COORDINATE UNDERGROUND CONDUIT INSTALLATION WITH FOOTING ELEVATIONS. CUTTING AND/OR DRILLING THROUGH FOOTINGS IS NOT ACCEPTABLE. SEE STRUCTURAL DETAILS FOR FOOTING ELEVATIONS. UNDERGROUND CONDUIT SHALL BE SCHEDULE 40 PVC, UNLESS NOTED OTHERWISE.

18 PROVIDE 1"C. FOR EACH FLOOR BOX POWER BRANCH CIRCUIT FEEDER, UNLESS NOTED OTHERWISE. VERIFY LOCATION OF ALL FLOOR BOXES AND FLOOR OUTLETS WITH ARCHITECT PRIOR TO ROUGH-IN.

19 ELECTRICAL REQUIREMENTS AND RATINGS FOR MECHANICAL EQUIPMENT ARE INDICATED IN THE MOTOR SCHEDULES. EQUIPMENT LOCATIONS ARE INDICATED ON DRAWINGS FOR COORDINATION PURPOSES. COORDINATE EXACT LOCATIONS WITH MECHANICAL.

20 DISCONNECTS AND/OR TOGGLE SWITCHES FOR EQUIPMENT SHALL NOT BE MOUNTED DIRECTLY TO THE EQUIPMENT. PROVIDE INDEPENDENT SUPPORT.

21 ALL JUNCTION BOXES SHOWN SHALL BE 4"x4" WITH SINGLE GANG MUDRING, UNLESS INDICATED OTHERWISE.

22 ALL EXTERIOR RATED WEATHERPROOF GFCI RECEPTACLES SHALL BE MOUNTED AT 24" AFF UNLESS NOTED OTHERWISE. PROVIDE HEAVY DUTY WET LOCATION WHILE IN USE COVER.

23 PROVIDE SELF ADHESIVE IDENTIFICATION INSIDE COVER OF EACH FUSIBLE SWITCH, INDICATING SIZE AND TYPE OF FUSES PROVIDED.

SPECIAL SYSTEM GENERAL NOTES

1 ALL LOW-VOLTAGE SYSTEM CONDUITS SHALL HAVE LONG RADIUS SWEEPS.

2 PROVIDE 2-GANG J-BOX WITH SINGLE GANG MUDRING AND BLANK COVER PLATE FOR DATA, VOICE, AND TV LOCATIONS. ROUTE 1"C. UP INTO CONCEALED ACCESSIBLE CEILING SPACE. PROVIDE NYLON BUSHINGS AND PULL STRINGS.

3 DATA AND TV ROUGH-INS SHALL BE MOUNTED AT THE SAME ELEVATION AND WITHIN 12" OF THE ADJACENT POWER RECEPTACLE. REFER TO POWER PLANS FOR LOCATIONS.

4 PROVIDE INSULATED BUSHINGS OVER CONDUIT ENDS AT ROUGH-IN AND CONDUIT SLEEVE LOCATIONS PRIOR TO INSTALLATION OF ANY CABLING.

5 DEVICES INSTALLED IN THE CEILING GRID SHALL BE CENTERED IN THE TILE. CORRIDOR DEVICES SHALL BE MOUNTED IN A STRAIGHT LINE AS SHOWN ON PLANS.

6 LOCATE SMOKE DETECTORS AND SMOKE ALARMS AT LEAST 3' FROM SUPPLY AIR DIFFUSERS.

7 PROVIDE CIRCUIT BREAKER "LOCK-ON" DEVICES FOR FACP AND NAC CIRCUIT(S).

8 ALL WALL PENETRATIONS FOR FIRE ALARM WIRING SHALL BE IN CONDUIT. FIRE ALARM CONTRACTOR SHALL NOT INSTALL FIRE ALARM CABLING IN SLEEVES FOR OTHER LOW-VOLTAGE SYSTEMS.

9 PROVIDE 1"C TO EACH FLOOR BOX DATA/PHONE OR TV OUTLET SHOWN (FOR EACH SYMBOL). ROUTE TO NEAREST WALL AND UP INTO CONCEALED ACCESSIBLE CEILING SPACE. PROVIDE NYLON BUSHINGS AND PULL STRING IN CONDUIT.

10 COORDINATE LOCATIONS OF ALL DEVICES WITH WALL FINISHES. DO NOT INSTALL IN MIRRORS. REFER TO ARCHITECTURAL ELEVATIONS.

11 ALL LOW-VOLTAGE CABLING SHALL BE CONCEALED IN ACCESSIBLE CEILINGS, RACEWAY, OR CABLE TRAYS.

12 COORDINATE CABLE TRAY ROUTING WITH ALL TRADES. MAINTAIN 6" SEPARATION FROM LIGHT FIXTURE BALLAST/DRIVERS. REFER TO CABLE TRAY DETAILS FOR WALL PENETRATIONS.

13 PROVIDE 2-GANG J-BOX WITH 2-GANG MUDRING AND BLANK COVER PLATE FOR 'MM' TYPE DATA BOXES. ROUTE (2) 1 ¼"C. UP INTO CONCEALED ACCESSIBLE CEILING SPACE. PROVIDE NYLON BUSHINGS AND PULL STRING IN CONDUITS. SEE SPECIFICATIONS FOR MORE INFORMATION.

14 PROVIDE BLANK 4-POSITION FACEPLATE FOR ALL DATA OUTLET LOCATIONS WITH A "0" DESIGNATION FOR CABLE QUANTITIES.

15 CABLES SHALL BE SUPPORTED FROM STRUCTURE VIA APPROVED J-HOOKS SPECIFIED WHERE NO CABLE TRAY IS PRESENT.

16 VINYL TIE STRAPS ARE PROHIBITED THROUGHOUT. UTILIZE VELCRO TIE STRAPS TO BUNDLE CABLES THROUGHOUT THE FACILITY.

17 CABLE ENDS (INSIDE BOX AND AT BACK OF PATCH PANELS) SHALL BE LABELED. SEE SPECIFICATIONS. FACEPLATES AND PATCH PANELS FACES SHALL ALSO BE LABELED.

18 CONTRACTOR SHALL PROVIDE LADDER RACK IN EACH DATA CLOSET. THE LAYOUTS SHOWN ARE DIAGRAMATIC ONLY AND SHALL BE THE MINIMUM LEVEL. ACCESSORIES SUCH AS RADIOUS CURVES, SUPPORTS, WATERFALLS, ETC. ARE NOT SHOWN, BUT SHALL BE INCLUDED. PROVIDE ADDITIONAL LADDER RACK TO SUPPORT CABLES AS REQUIRED.

19 SEE TECHNOLOGY RISERS FOR MORE INFORMATION ABOUT TECHNOLOGY ROOM LAYOUTS.

20 BACKBONE CABLING SHALL BE INSTALLED IN DEDICATED PATHWAYS. DO NOT INSTALL UTP AND OTHER CABLES WITH BACKBONE CABLES WHEN IN CONDUIT. BACKBONE AND OTHER CABLES CAN SHARE CABLE TRAY AND LADDER RACK.

21 FIRE ALARM SYSTEM CONTRACTOR SHALL PROVIDE DEVICES, CONDUIT, WIRES, AND CABLE AS DIRECTED BY EQUIPMENT MANUFACTURER. MATERIALS, EQUIPMENT, AND WORKMANSHIP SHALL MEET PREVAILING CODES. THE SYSTEM SHALL BE COMPLETE AND OPERABLE IN EVERY RESPECT.

22 TELEVISION SYSTEM. CONTRACTOR SHALL PROVIDE ALL CONDUIT, AND J-BOXES (MINIMUM TWO-GANG) FOR A COMPLETE RACEWAY SYSTEM. CONDUIT SHALL BE A MINIMUM OF ¾" UNLESS NOTED. TV OUTLETS, CABLE, AMPLIFIERS, SPLITTERS, ANTENNA WITH MAST, ETC., BY OTHERS.

23 SECURITY SYSTEM. CONTRACTOR SHALL PROVIDE ALL CONDUIT, AND J-BOXES (MINIMUM TWO-GANG) FOR A COMPLETE RACEWAY SYSTEM. CONDUIT SHALL BE A MINIMUM OF ½" UNLESS NOTED. SECURITY SYSTEM CONTRACTOR SHALL INSTALL SECURITY PANELS, CAMERAS, WIRE, SECURITY DEVICES, ETC.

HTG architects

www.htg-architects.com
Minneapolis Bismarck

1010 Mainstreet, Suite 100
Hopkins, MN 55343
Tel: 952.278.8880

PROJECT

MAYO EMPLOYEES FEDERAL CREDIT UNION

NEW BUILDING
605 WEST AVE S.
LA CROSSE, WI

ISSUED SET	2026-03-27

REVISIONS

DATE	NO	

I hereby certify that this plan, specification or report was prepared by me or under my direct supervision and that I am a duly Licensed Professional Engineer under the laws of the state of Minnesota

Matthew W. Fults

40887 — Reg No.
2026-03-27 — Date

emanuelson-podas
consulting engineers

Emanuelson-Podas, Inc.
7705 Bush Lake Road
Edina, MN 55439

(952) 930-0050 | www.epinc.com

ELECTRICAL GENERAL NOTES

Drawn By: FSB Checked By: KDM

E0.1

3392.0002

COPYRIGHT © HTG ARCHITECTS

Autodesk Docs://3392.0002 Mayo EFCU - Lacrosse WI/Mayo EFCU_Lacrosse WI_MEP_2025.rvt
3/26/2026 7:16:14 PM

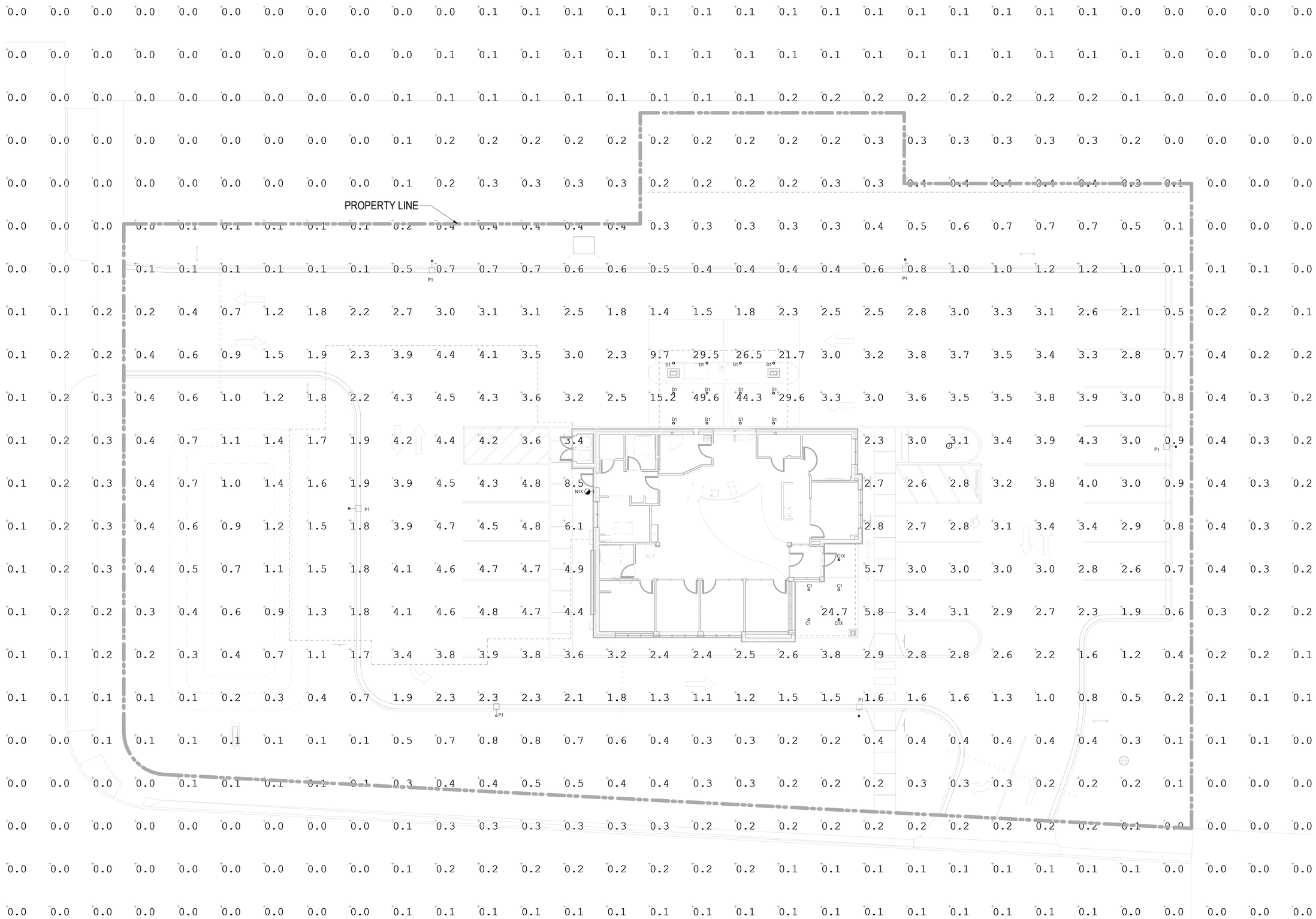

HTG architects

www.htg-architects.com
Minneapolis Bismarck

1010 Mainstreet, Suite 100
Hopkins, MN 55343
Tel: 952.278.8880

PROJECT

MAYO EMPLOYEES FEDERAL CREDIT UNION

NEW BUILDING
605 WEST AVE S.
LA CROSSE, WI

ISSUED SET 2026-03-27

REVISIONS

DATE	NO	

I hereby certify that this plan, specification or report was prepared by me or under my direct supervision and that I am a duly Licensed Professional Engineer under the laws of the state of Minnesota

Matthew W. Fults

40887 2026-03-27
Reg No. Date

emanuelson-podas consulting engineers

Emanuelson-Podas, Inc.
7705 Bush Lake Road
Edina, MN 55439

(952) 930-0050 | www.epinc.com

SITE PLAN - PHOTOMETRICS

Drawn By: FSB Checked By: KDM

E0.2

3392.0002

COPYRIGHT © HTG ARCHITECTS

Autodesk Docs://3392.0002 Mayo EFCU - Lacrosse WI/Mayo EFCU_Lacrosse WI_MEP_2025.rvt
3/26/2026 7:16:29 PM

LIGHT FIXTURE SCHEDULE

GENERAL NOTES:

A. CATALOG NUMBER INDICATES BASIC FIXTURE TYPE REQUIRED FOR THIS PROJECT AND MAY NOT BE COMPLETE. VERIFY WITH MANUFACTURER TO INCLUDE ALL OPTIONS AND ACCESSORIES REQUIRED FOR THIS INSTALLATION.
B. ELECTRICAL CONTRACTOR SHALL BE RESPONSIBLE FOR VERIFYING FIXTURE LOCATIONS, MOUNTING, AND REQUIREMENTS WITH ARCHITECTURAL PLANS, SECTIONS, ELEVATIONS, AND REFLECTED CEILING PLANS PRIOR TO ORDERING FIXTURES.
C. ALL FINISHES SHALL BE VERIFIED WITH THE ARCHITECT PRIOR TO ORDERING FIXTURES. FINISH SELECTION TO BE FROM MANUFACTURER'S STANDARD FINISHES UNLESS NOTED OTHERWISE. FINISHES SHALL BE VERIFIED AT THE TIME OF SHOP DRAWING SUBMITTAL.
D. SEE SPECIFICATIONS FOR EXTRA MATERIALS REQUIRED FOR LIGHT FIXTURES.
E. COORDINATE THE COMPATIBILITY OF DIMMING WITH SPECIFIED CONTROLS. DIMMING SHALL BE ACCOMPLISHED WITH NO VISIBLE FLICKER.
F. NO SUBSTITUTIONS SHALL BE ACCEPTED WITHOUT PRIOR APPROVAL BY THE ENGINEER.
G. EQUALS ARE ACCEPTABLE AND WILL BE REVIEWED AS PART OF THE SHOP DRAWING PROCESS.

FIXTURE NOTES:

1. PROVIDE SPECIFIED FIXTURE MODEL. INCLUDE AN ALLOWANCE PRICE IN BID. ALLOWANCE INCLUDES FIXTURE ONLY. PROVIDE ADDITIONAL COST FOR FREIGHT, INSTALL AND ADDITIONAL MARK-UP. PROVIDE CUT-SHEETS DURING SHOP DRAWING REVIEW.
2. CONTRACTOR SHALL PROVIDE POLE, BASE AND ANY OPTIONAL COMPONENTS NECESSARY FOR A COMPLETE AND CODE COMPLIANT FIXTURE ASSEMBLY ACCEPTABLE TO THE ARCHITECT AND AHJ.

TYPE	DESCRIPTION	VOLT	LAMPS TYPE	LAMPS QTY / FIXT.	VA / FIXT.	MANUFACTURER	CATALOG NUMBER	EQUAL MANUFACTURERS	L.L.F.	TYPE
C1	6" LED DOWNLIGHT. DIFFUSE REFLECTOR. 1500 NOMINAL LUMENS. INDIVIDUAL DIODES SHALL NOT BE VISIBLE. DAMP LOCATION RATED. FIXTURE SHALL HAVE NO GAP BETWEEN REFLECTOR AND LED ENGINE.	UNIV	LED 3500K	N/A	15	GOTHAM	IVO6-D-15LM-35K-80CRI-MD-MIN10-MVOLT	PRESCOLITE #LFR-6RD, HALO #HC6, LIGHTOLIER #C6RDL	0.9	C1
C1X	SAME AS C1 WITH BATTERY DRIVER.	UNIV	LED 3500K	N/A	15	GOTHAM			0.9	C1X
D1	6" LED DOWNLIGHT. DIFFUSE REFLECTOR. 3000 NOMINAL DELIVERED LUMENS. INDIVIDUAL DIODES SHALL NOT BE VISIBLE. DAMP LOCATION RATED. FIXTURE SHALL HAVE NO GAP BETWEEN REFLECTOR AND LED ENGINE.	UNIV	LED 3500K	N/A	26	GOTHAM	IVO6-D-30LM-35K-80CRI-WD-MIN10-MVOLT-WL-P	LITHONIA, HALO COMMERCIAL, MAXILUME	0.9	D1
N1X	LED WALL PACK TYPE III DISTRIBUTION 2974 NOMINAL DELIVERED LUMENS. BLACK IN COLOR. PROVIDE WITH INTEGRAL HI/LOW OCCUPANCY SENSOR FOR 50% LEVEL CONTROL WITH BATTERY DRIVER.	UNIV	LED 3000K	N/A	21	LITHONIA	DSXW1LED-P3-30K-80CRI-T3M-MVOLT-SRM-PIR-E10WH-DBLXD	HE WILLIAMS, ,GARDCO, MCGRAW EDISON GWC	0.9	N1X
P1	SINGLE-HEAD, TYPE IV (P2B) DISTRIBUTION LED POLE MOUNTED FIXTURE W/ HOUSESIDE SHIELD. 25' SQUARE STEEL POLE, BLACK IN COLOR. HEAD AND POLE SHALL HAVE MATCHING FINISH. 145470 & 8343 NOMINAL DELIVERED LUMENS. PROVIDE CONCRETE BASE PER DETAIL. PROVIDE BASE COVER. PROVIDE WITH INTEGRAL HI/LOW OCCUPANCY SENSOR FOR 50% LEVEL CONTROL.	UNIV	LED 3000K	N/A	170	LITHONIA	DSX0-LED-P7-30K-80CRI-BL04-MVOLT-SPA-PIR-DBLXD POLE: SSS-25-4G-DM28AS-VD-DBLXD	BEACON, MCGRAW EDISON, GARDCO	0.9	P1

gotham | I V O™

Luminaire Type:
Catalog Number:

IVO™ 6" Round Downlight
New Construction

TRIM STYLES AND COLORS

New construction housing shown. Please see page 6 for full set of dimensional drawings.

Flange Styles

Reflector Colors

QUICK SPECIFICATIONS

Feature Set

- Perfect Color™ consistency within ½-step MacAdam Ellipse
- Exceptional color rendering with 80 CRI, 90 CRI, or 95 CRI minimum
- Bounding Ray™ optical design delivers low brightness apertures for a comfortable lighting experience
- 45° visual cut-off angle to source
- Up to 90% lumen maintenance at 55,000 hours
- Wet Location optional, covered ceiling
- Easy installation and servicing with snap-in Driver
- Batwing distributions with feathered edges to provide even illumination fixture-to-fixture
- Clean beams with soft transitions from narrow spot up to wide flood distributions
- Field changeable optics available every 5°

Distribution / Beam Angles

Superior Performance*

Nominal Lumens	05LM	07LM	10LM	15LM	20LM	25LM	30LM	35LM	40LM	45LM	50LM	60LM	70LM	80LM
Delivered Lumens	505	759	1018	1524	2024	2463	2949	3438	3889	4548	4876	5839	6519	7373
Wattage	4.9	7.3	9.8	15.0	20.5	25.2	25.2	37.4	42.8	45.1	49.3	60.6	68.4	74.9
Lumens per Watt	103	104	104	102	99	98	95	92	91	101	99	96	95	98

*Based on 3500K MD 80CRI P AR LSS

PRODUCT FAMILY

IVO 6" Round Product Family

GOTHAM ARCHITECTURAL DOWNLIGHTING | 1 Acuity Way, Decatur, GA 30035 | P 800-705-SERV (7378) | gothamlighting.com
© 2014-2025 Acuity Brands Lighting Inc. All Rights Reserved. Rev: 11/11/25 Specifications subject to change without notice.

d^e series

D-Series Size 1
LED Wall Luminaire

Catalog Number
Notes
Type

Hit the Tab key or mouse over the page to see all interactive elements.

Specifications

Luminaire

Width:	13-3/4" (34.9 cm)	**Weight:**	12 lbs (5.4 kg)
Depth:	10" (25.4 cm)		
Height:	6-3/8" (16.2 cm)		

Back Box (BBW, E20WC)

Width:	13-3/4" (34.9 cm)	**BBW Weight:**	5 lbs (2.3 kg)
Depth:	4" (10.2 cm)	**E20WC Weight:**	10 lbs (4.5 kg)
Height:	6-3/8" (16.2 cm)		

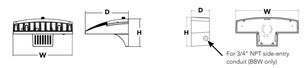

Introduction

The D-Series Wall luminaire is a stylish, fully integrated LED solution for building-mount applications. It features a sleek, modern design and is carefully engineered to provide long-lasting, energy-efficient lighting with a variety of optical and control options for customized performance.

With an expected service life of over 20 years of nighttime use and significant energy savings, the D-Series Wall is a reliable, low-maintenance lighting solution that produces sites that are exceptionally illuminated.

Ordering Information

EXAMPLE: DSXW1 LED P2 40K 70CRI T3M MVOLT SRM DDBTXD

DSXW1 LED

Series	Lumen Package	CCT	CRI	Distribution	Voltage	Mounting	Control Options
DSXW1 LED	P1 2000 Lumens P2 2200 Lumens P3 3200 Lumens P4 4300 Lumens P5 5200 Lumens P6 7200 Lumens P7 10000 Lumens	27K 2700K 30K 3000K 35K 3500K 40K 4000K 50K 5000K 57K 5700K AMBPC Amber PC[1] AMBLW Amber LW[1]	70CRI 70CRI 80CRI 80CRI[2] AMCRI Amber CRI	T2S Type 2 Short T2M Type 2 Medium T3LG Type 3 Low Glare[4] T3M Type 3 Medium T4M Type 4 Medium TFTM Forward Throw Medium BLC3 Back Light Control Type 3[5] BLC4 Back Light Control Type 4[5]	MVOLT 120[3] 208[3] 240[3] 277[3] 347[3,6] 480[3,6] HVOLT[3]	**Shipped included** SRM Surface mounting bracket BBW Surface-mounted back box (for conduit entry)[7]	**Shipped installed** PE Photoelectric cell, button type[8] DMG 0-10v dimming wires pulled outside fixture (for use with an external control, ordered separately) PIR 180° motion/ambient light sensor, <15' mtg ht[9] PIRH 180° motion/ambient light sensor, 15-30' mtg ht[9] PIR1FC3V Motion/ambient sensor, 8-15' mounting height, ambient sensor enabled at 1fc[9] PIRH1FC3V Motion/ambient sensor, 15-30' mounting height, ambient sensor enabled at 1fc[9] E20WC 20 Watt Emergency battery backup (includes external component enclosure), CA Title 20 Compliant[10] E10WH 10 Watt Emergency battery backup (includes external component enclosure), CA Title 20 compliant[10]

Other Options

Shipped installed
SF Single fuse (120, 277 or 347V)[3,11]
DF Double fuse (208, 240 or 480V)[3,11]
HS House-side shield[12]
SPD Separate surge protection

Shipped separately[13]
BSW Bird-deterrent spikes
VG Vandal guard
DDL Diffused drop lens

Finish (required)

DDBXD	Dark bronze	DSSTD	Sandstone	DWHGXD	Textured white
DBLXD	Black	DDBTXD	Textured dark bronze	DSSTXD	Textured sandstone
DNAXD	Natural aluminum	DBLBXD	Textured black		
DWHXD	White	DNATXD	Textured natural aluminum		

Accessories
Ordered and shipped separately.

DSXWHS U House-side shield (one per light engine)
DSXWBSW U Bird-deterrent spikes
DSXWVG U Vandal guard accessory

NOTES

1 Only available with P1 and P6 Packages.
2 Not available with 57K.
3 Only Available with AMCRI.
4 Not available with HS Option.
5 Single fuse (SF) requires 120, 277 or 347 voltage option. Double fuse (DF) requires 208, 240 or 480 voltage option.
6 Not available with P1 package. Not available with motion/ambient light sensors (PIR or PIRH). Not Available with DMG.
7 Back box ships installed on fixture. Cannot be field installed. Cannot be ordered as an accessory. Not Available with E20WC or E10WH.
8 Photocontrol (PE) requires 120, 208, 240, 277 or 347 voltage option. Not available with motion/ambient light sensors (PIR or PIRH).
9 Reference Motion Sensor table on page 3. Not available with DMG.
10 Not compatible with conduit entry applications. Not available with BBW mounting option. Not available with SF and DF fusing. Not available with 347, 480, HVOLT voltage options. Emergency components located in back box housing. Not available with SPD.
11 Not available with E20WC and E10WH.
12 Also available as a separate accessory; see Accessories information.

© 2013-2026 Acuity Brands Lighting, Inc. All rights reserved.

d^e series

D-Series Size 0
LED Area Luminaire

Catalog Number
Notes
Type

Hit the Tab key or mouse over the page to see all interactive elements.

Specifications

EPA:	0.44 ft² (0.04 m²)
Length:	26.18" (66.5 cm)
Width:	14.06" (35.7 cm)
Height H1:	2.26" (5.7 cm)
Height H2:	7.46" (18.9 cm)
Weight:	23 lbs (10.4 kg)

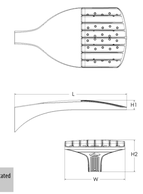

Design Select options indicated by this color background.

Introduction

The modern styling of the D-Series features a highly refined aesthetic that blends seamlessly with its environment. The D-Series offers the benefits of the latest in LED technology into a high performance, high efficacy, long-life luminaire.

The photometric performance results in sites with excellent uniformity, greater pole spacing and lower power density. D-Series outstanding photometry aids in reducing the number of poles required in area lighting applications, with typical energy savings of 70% and expected service life of over 100,000 hours.

design select

Items marked by a shaded background qualify for the Design Select program and ship in 15 days or less. To learn more about Design Select, visit www.acuitybrands.com/designselect.
*See ordering tree for details

Ordering Information

EXAMPLE: DSX0 LED P6 40K 70CRI T3M MVOLT SPA NLTAIR2 PIRHN DDBXD

DSX0 LED

Series	LEDs	Color temperature[1]	Color Rendering Index[1]	Distribution	Voltage	Mounting
DSX0 LED	**Forward optics** P1 P5 P2 P6 P3 P7 P4 **Rotated optics** P10[2] P12[2] P11[2] P13[2]	(this section 70CRI only) 30K 3000K 40K 4000K 50K 5000K 27K 2700K 30K 3000K 35K 3500K 40K 4000K 50K 5000K	70CRI 70CRI 70CRI 80CRI 80CRI 80CRI 80CRI 80CRI	AFR Automotive front row T1S Type I short T2M Type II medium T3M Type III medium T3LG Type III low glare[3] T4M Type IV medium T4LG Type IV low glare[3] TFTM Forward throw medium T5M Type V medium T5LG Type V low glare T5W Type V wide BLC3 Type III backlight control[4] BLC4 Type IV backlight control[4] LCCO Left corner cutoff[5] RCCO Right corner cutoff[5]	MVOLT (120V-277V)[6] HVOLT (347V-480V)[6] XVOLT (277V-480V)[6] 120 [6, 7] 208 [6, 7] 240 [6, 7] 277 [6, 7] 347 [6, 7] 480 [6, 7]	**Shipped included** SPA Square pole mounting (#8 drilling, 3.5" min. SQ pole) RPA Round pole mounting (#8 drilling, 3" min. RND pole) SPA5 Square pole mounting (#5 drilling, 3" min. SQ pole)[8] RPA5 Round pole mounting (#5 drilling, 3" min. RND pole)[8] SPA8N Square narrow pole mounting (#8 drilling, 3" min. SQ pole) WBA Wall bracket[9] MA Mast arm adapter (mounts on 2 3/8" OD horizontal tenon)

Control options		Other options	Finish (required)
Shipped installed NLTAIR2 PIRHN nLight AIR gen 2 enabled with bi-level motion / ambient sensor, 8-40' mounting height, ambient sensor enabled at 2fc[1, 13, 14, 15, 16] PIR High/low, motion/ambient sensor, 8-40' mounting height, ambient sensor enabled at 2fc[13, 15, 16] PER NEMA twist-lock receptacle only (controls ordered separately)[15, 17] PERS Five-pin receptacle only (controls ordered separately)[15, 18] PER7 Seven-pin receptacle only (controls ordered separately)[15, 18, 19] FAO Field adjustable output[13, 20] BL30 Bi-level switched dimming, 30%[15, 19] BL50 Bi-level switched dimming, 50%[15, 19] DMG 0-10v dimming wires pulled outside fixture (for use with an external control, ordered separately)[21]		**Shipped installed** HS Houseside shield (black finish standard)[22] L90 Left rotated optics[1] R90 Right rotated optics[1] CCE Coastal Construction[23] HA 50°C ambient operation[13] BAA Buy America(n) Act and/or Build America Buy America Qualified SF Single fuse (120, 277, 347V)[24] DF Double fuse (208, 240, 480V)[24] **Shipped separately** EGSR External Glare Shield (reversible, field install required, matches housing finish) BSDB Bird Spikes (field install required)	DDBXD Dark Bronze DBLXD Black DNAXD Natural Aluminum DWHXD White DDBTXD Textured dark bronze DBLBXD Textured black DNATXD Textured natural aluminum DWHGXD Textured white

© 2011-2025 Acuity Brands Lighting, Inc. All rights reserved.

HTG architects
www.htg-architects.com
Minneapolis Bismarck
1010 Mainstreet, Suite 100
Hopkins, MN 55343
Tel: 952.278.8880

PROJECT

MAYO EMPLOYEES FEDERAL CREDIT UNION

NEW BUILDING
605 WEST AVE S.
LA CROSSE, WI

ISSUED SET	2026-03-27

REVISIONS

DATE	NO	

I hereby certify that this plan, specification or report was prepared by me or under my direct supervision and that I am a duly Licensed Professional Engineer under the laws of the state of Minnesota

Matthew W. Fults

40887	2026-03-27
Reg No.	Date

emanuelson-podas consulting engineers
Emanuelson-Podas, Inc.
7705 Bush Lake Road
Edina, MN 55439
(952) 930-0050 | www.epinc.com

SITE PLAN - ELECTRICAL LIGHT FIXTURES DESCRIPTIONS

Drawn By: FSB Checked By: KDM

E0.3

3392.0002

COPYRIGHT © HTG ARCHITECTS

Autodesk Docs://3392.0002 Mayo EFCU - Lacrosse WI/Mayo EFCU_Lacrosse WI_MEP_2025.rvt
3/26/2026 7:16:22 PM

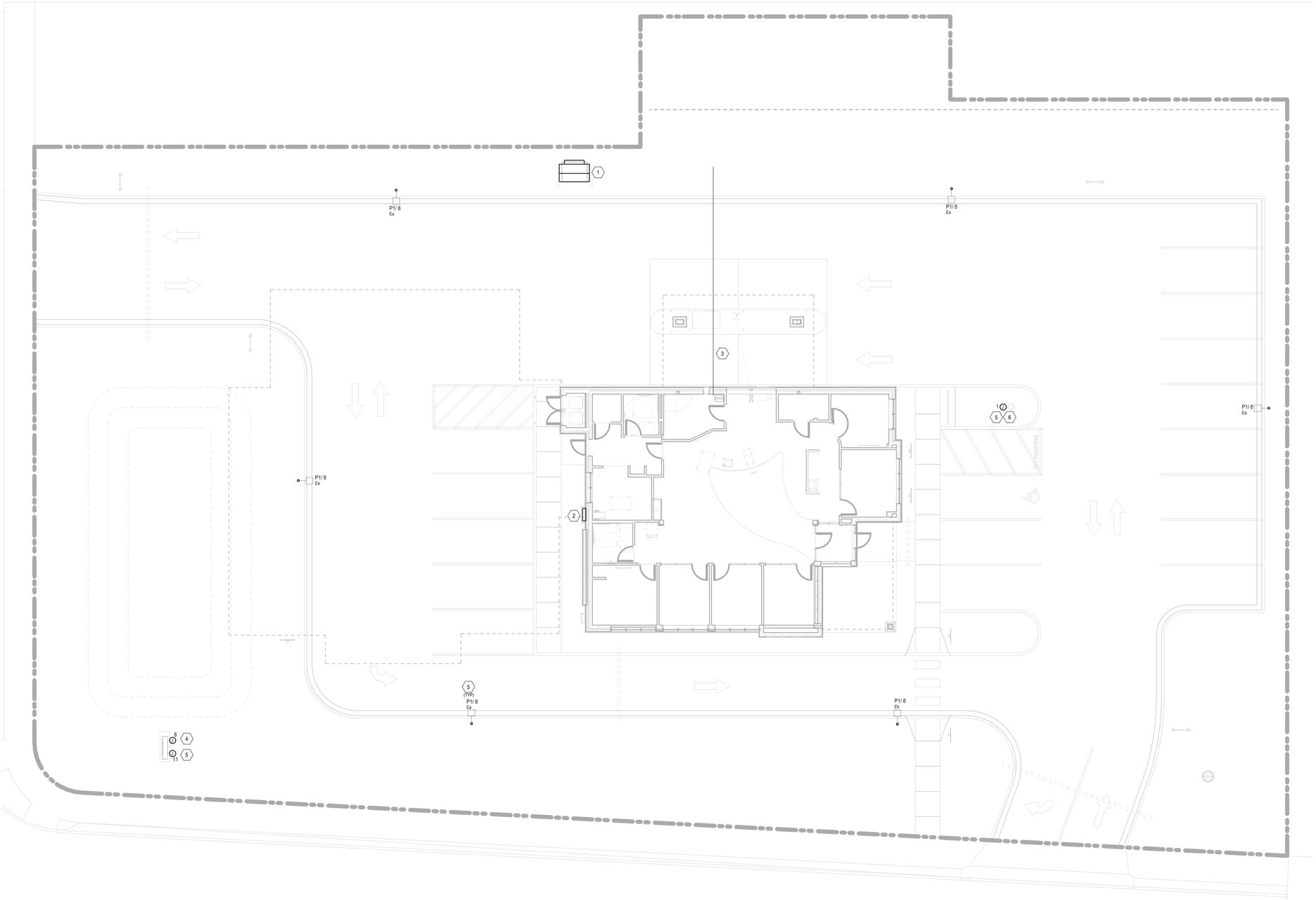

1 ELECTRICAL SITE PLAN
SCALE: 1" = 10'-0"

GENERAL NOTES:

A. ALL SITE LIGHTING CIRCUIT CONDUCTORS SHALL BE #10'S IN 1" PVC CONDUIT. UNLESS OTHERWISE NOTED. PROVIDE GROUND WIRE.

B. ALL CONDUCTORS AND CONDUITS SHALL BE ROUTED UNDERGROUND.

C. LIGHT POLES INSTALLED NEAR CURBS SHALL BE SETBACK 30" FROM CURB TO FRONT EDGE OF CONCRETE BASE.

D. ANY EXPOSED CONDUIT SHALL BE METALLIC RIGID AND PAINTED TO BLEND WITH ADJACENT SURFACE. RIGID PVC CONDUIT IS NOT ALLOWED FOR APPLICATIONS.

E. ALL CIRCUITING SHALL BE FED FROM PANEL A UNLESS NOTED OTHERWISE.

F. PARKING LOT LIGHTING SHALL HAVE TWO CIRCUITS ROUTED TO EACH POLE HAND-HOLE. ONE SHALL BE CONTROLLED FOR PHOTOCELL ON/OFF OPERATION AND THE OTHER SHALL BE CONTROLLED FOR PHOTOCELL ON/TIMER OFF OPERATION. THIS WILL ALLOW FOR FUTURE SCHEDULING SELECTION AT EACH POLE.

KEY NOTES:

1. TRANSFORMER PROVIDED BY UTILITY. CONCRETE BOLLARDS PROVIDED BY THE CONTRACTOR.
2. PROVIDE WALL MOUNT CT CABINET. SEE E3.1 FOR MORE INFORMATION.
3. (2) 2" CONDUITS FROM COMMUNICATIONS UTILITY MPOP BOARD TO PROPERTY LINE FOR COMMUNICATIONS UTILITY CABLING. COORDINATE WITH UTILITY FOR EXACT LOCATION AT PROPERTY LINE AND REQUIREMENTS. ADJUST ROUTING AS REQUIRED.
4. CONNECT TO MONUMENT SIGN. VERIFY EXACT CIRCUIT SIZE(S), REQUIREMENTS, AND LOCATION. ROUTE (2) 1" CONDUITS FOR POWER TO PANEL AND (2) 1" CONDUITS FOR COMMUNICATIONS TO IT ROOM.
5. ROUTE THROUGH LIGHTING CONTROL RELAY(S).
6. PROVIDE CONNECTION FOR FLAG POLE LIGHT. VERIFY CONNECTION REQUIREMENTS WITH POLE SUPPLIER AND ROUTE 1" CONDUIT TO PANEL.

HTG architects
www.htg-architects.com
Minneapolis Bismarck

1010 Mainstreet, Suite 100
Hopkins, MN 55343
Tel: 952.278.8880

PROJECT

MAYO EMPLOYEES FEDERAL CREDIT UNION

NEW BUILDING
605 WEST AVE S.
LA CROSSE, WI

ISSUED SET	2026-03-27

REVISIONS

DATE	NO	

I hereby certify that this plan, specification or report was prepared by me or under my direct supervision and that I am a duly Licensed Professional Engineer under the laws of the state of Minnesota

Matthew W. Fults

40887	2026-03-27
Reg No.	Date

emanuelson-podas
consulting engineers
Emanuelson-Podas, Inc.
7705 Bush Lake Road
Edina, MN 55439
(952) 930-0030 | www.epinc.com

SITE PLAN - ELECTRICAL

Drawn By: FSB Checked By: KDM

E0.4

3392.0002

COPYRIGHT © HTG ARCHITECTS

Autodesk Docs://3392.0002 Mayo EFCU - Lacrosse WI/Mayo EFCU_Lacrosse WI_MEP_2025.rvt
3/26/2026 7:16:26 PM

1 MAIN LEVEL PLAN - LIGHTING
SCALE: 3/16" = 1'-0"

GENERAL NOTES:

A. ALL EMERGENCY LIGHTING AND EXIT SIGNS SHALL BE FED FROM AN UNSWITCHED HOT CONDUCTOR.

B. ALL NORMAL CIRCUITING TO BE FED FROM PANEL A UNLESS NOTED OTHERWISE. CONTRACTOR TO DETERMINE BEST ROUTE FOR CONDUIT AND WIRING.

C. CONTRACTOR SHALL COMPLETE AND SUBMIT LIGHTING UTILITY REBATE APPLICATIONS IF AVAILABLE WITH UTILITY. COORDINATE ALL LIGHTING REBATES WITH OWNER.

D. WHERE EXACT HEIGHTS ARE NOTED VERIFY WITH THE ARCHITECT PRIOR TO INSTALLATION.

KEY NOTES:

1. SECURITY FIXTURE. DO NOT SWITCH. IN AREAS WITH DIMMING CONTROL CONNECT 0-10V CONTROL WIRES TO FIXTURE DRIVER FOR EQUAL LEVEL CONTROL. WHEN POWER IS OFF TO ASSOCIATED SWITCH-LEG THIS FIXTURE SHALL COME TO FULL ILLUMINATION. PROVIDE RELAY TO OPEN 0-10V CONTROL WIRES AS REQUIRED.
2. ROUTE THROUGH LIGHTING CONTROL RELAYS.
3. PROVIDE CONNECTION TO EXTERIOR BUILDING SIGNAGE. LETTERS WILL BE INDIVIDUALLY LIT. CONFIRM EXACT REQUIREMENTS AND LOCATIONS.
4. PROVIDE (1) SPDT CENTER OFF SWITCHES (OCa) FOR CONTROL OF OPEN/CLOSE SIGN. PROVIDE ENGRAVED LABEL ON SWITCH PLATE WITH SPECIFIC LOAD.
5. LIGHTING CONTROL PANEL. SEE CONTROL SCHEDULE AND SPECIFICATION FOR REQUIREMENTS.
6. LIGHTING CONTROL STATION. EACH BUTTON SHALL HAVE PRINTED BLACK ON CLEAR LABEL WITH LOAD DESCRIPTION. AT MULTI-STATION LOCATIONS MOUNT ALL UNDER SHARED COVER PLATE.
7. PROVIDE EMERGENCY INVERTER SURE-LITE #INVM-350 OR EQUAL AND MOUNT IN ACCESSIBLE LOCATION FOR EMERGENCY OPERATION OF TYPE 'B1X' LIGHT FIXTURES.
8. PROVIDE DMX/RGBW CONTROLLER FOR EXTERIOR COLOR CHANGING TAPE LIGHTING * (1)"SWITCH-LEG "ch1", VERIFY LOCATION WITH OWNER PRIOR TO INSTALLATION.
9. MOUNT LED TAPE IN BOTTOM SIDE OF ROOF EAVE TO WASH DOWN SIDE OF BUILDING. CUT FIXTURE TO LENGTH. MOUNT POWER SUPPLY IN NEAREST CONCEALED ACCESSIBLE CEILING SPACE.
10. PROVIDE OCCUPANCY SENSOR WITH AUXILIARY CONTACT TO CONTROL CONVENIENCE RECEPTACLES IN SPACE. REFER TO POWER PLAN FOR RECEPTACLE LOCATIONS.

LIGHTING CONTROL SUMMARY

GENERAL NOTES:
1. IF NO CONTROL STRATEGY IS LISTED, LIGHTING CONTROLS SHALL BE MANUAL, LINE VOLTAGE (WITH 0-10 V DIMMING, WHERE SHOWN) AND CONTAIN NO AUTOMATIC FUNCTION.
2. SEE PLANS FOR TYPE, LOCATION AND QUANTITY OF SENSORS.
3. TIME SCHEDULES SHALL BE DEFINED BY THE OWNER. PROVIDE A COORDINATION MEETING WITH THE OWNER TO DETERMINE SCHEDULES.
4. ALL LIGHTING CONTROLS SHALL BE COMMISSIONED. SEE THE SPECIFICATIONS FOR ADDITIONAL REQUIREMENTS.
5. THE TYPICAL SPACES LISTED IN EACH SEQUENCE ARE NOT INTENDED TO BE ALL INCLUSIVE, OR EXCLUSIVE TO ANY SPACE AND ARE LISTED AS GENERAL REFERENCE ONLY.
6. ADDITIONAL BUTTONS ARE PERMITTED TO COMPLY WITH THE CONTROL REQUIREMENTS LISTED BELOW.

LC-A	
OCC SENSOR FUNCTION:	OCCUPANCY, 100% ON / OFF
TIME-SWITCH FUNCTION:	NONE
MANUAL LTG CONTROL:	NONE
DAYLIGHT RESPONSE:	NONE
TYPICAL SPACES:	CORRIDOR
LC-B	
OCC SENSOR FUNCTION:	VACANCY, MANUAL ON / AUTO OFF (CEILING OR SWITCH MOUNT SENSOR AS SHOWN)
TIME-SWITCH FUNCTION:	NONE
MANUAL LTG CONTROL:	2-BUTTON ON / OFF
DAYLIGHT RESPONSE:	NONE
TYPICAL SPACES:	STORAGE ROOM / PRIVATE RESTROOM
LC-C	
OCC SENSOR FUNCTION:	VACANCY, MANUAL ON / AUTO OFF (CEILING OR SWITCH MOUNT SENSOR AS SHOWN)
TIME-SWITCH FUNCTION:	NONE
MANUAL LTG CONTROL:	2-BUTTON ON / OFF & RAISE / LOWER WITH 0-10V DIMMING
DAYLIGHT RESPONSE:	CLG MT'D PHOTOCELL OR INTEGRAL TO WALL BOX DIMMER AS INDICATED, CONTINUOUS DIMMING
TYPICAL SPACES:	PRIVATE OFFICE WITH DAYLIGHT
LC-D	
OCC SENSOR FUNCTION:	VACANCY, MANUAL ON / AUTO OFF (CEILING OR SWITCH MOUNT SENSOR AS SHOWN)
TIME-SWITCH FUNCTION:	NONE
MANUAL LTG CONTROL:	2-BUTTON ON / OFF & RAISE / LOWER WITH 0-10V DIMMING
DAYLIGHT RESPONSE:	NONE
TYPICAL SPACES:	PRIVATE OFFICE WITHOUT DAYLIGHT
LC-E	
OCC SENSOR FUNCTION:	NONE
TIME-SWITCH FUNCTION:	SCHEDULE ON DURING BUSINESS HOURS.
MANUAL LTG CONTROL:	PRESET STATION W/ RAISE/LOWER CONTROL, DIMMERS PER ZONE
DAYLIGHT RESPONSE:	CEILING MOUNTED PHOTOCELL, CONTINOUS DIMMING IN DAYLIT ZONE (WHERE PRESENT)
TYPICAL SPACES:	TELLER, WAITING, WORK AREA, CLERESTORY
LC-F	
OCC SENSOR FUNCTION:	OCCUPANCY, AUTO ON TO 50% / AUTO OFF (CEILING OR SWITCH MOUNT SENSOR AS SHOWN)
TIME-SWITCH FUNCTION:	NONE
MANUAL LTG CONTROL:	PRESET STATION W/ RAISE/LOWER CONTROL, DIMMERS PER ZONE
DAYLIGHT RESPONSE:	NONE
TYPICAL SPACES:	CONFERENCE ROOM
LC-G	
OCC SENSOR FUNCTION:	OCCUPANCY, 100% ON / OFF
TIME-SWITCH FUNCTION:	SCHEDULE ON DURING BUSINESS HOURS AFTER FIRST OCCUPANCY ACTIVATION. OCCUPANCY FOR 20 MINUTES AFTER HOURS.
MANUAL LTG CONTROL:	PRESET STATION W/ RAISE/LOWER CONTROL, DIMMERS PER ZONE
DAYLIGHT RESPONSE:	CEILING MOUNTED PHOTOCELL, CONTINOUS DIMMING IN DAYLIT ZONE (WHERE PRESENT)
TYPICAL SPACES:	VESTIBULE

HTG architects
www.htg-architects.com
Minneapolis Bismarck
1010 Mainstreet, Suite 100
Hopkins, MN 55343
Tel: 952.278.8880

PROJECT

MAYO EMPLOYEES FEDERAL CREDIT UNION

NEW BUILDING
605 WEST AVE S.
LA CROSSE, WI

ISSUED SET 2026-03-27
REVISIONS

DATE	NO	

I hereby certify that this plan, specification or report was prepared by me or under my direct supervision and that I am a duly Licensed Professional Engineer under the laws of the state of Minnesota

Matthew W. Fults

40887 2026-03-27
Reg No. Date

emanuelson-podas consulting engineers
Emanuelson-Podas, Inc.
7705 Bush Lake Road
Edina, MN 55439
(952) 930-0050 | www.epinc.com

MAIN LEVEL PLAN - LIGHTING

Drawn By: FSB Checked By: KDM

E1.1

3392.0002

COPYRIGHT © HTG ARCHITECTS

Autodesk Docs://3392.0002 Mayo EFCU - Lacrosse WI/Mayo EFCU_Lacrosse WI_MEP_2025.rvt
3/26/2026 7:16:29 PM

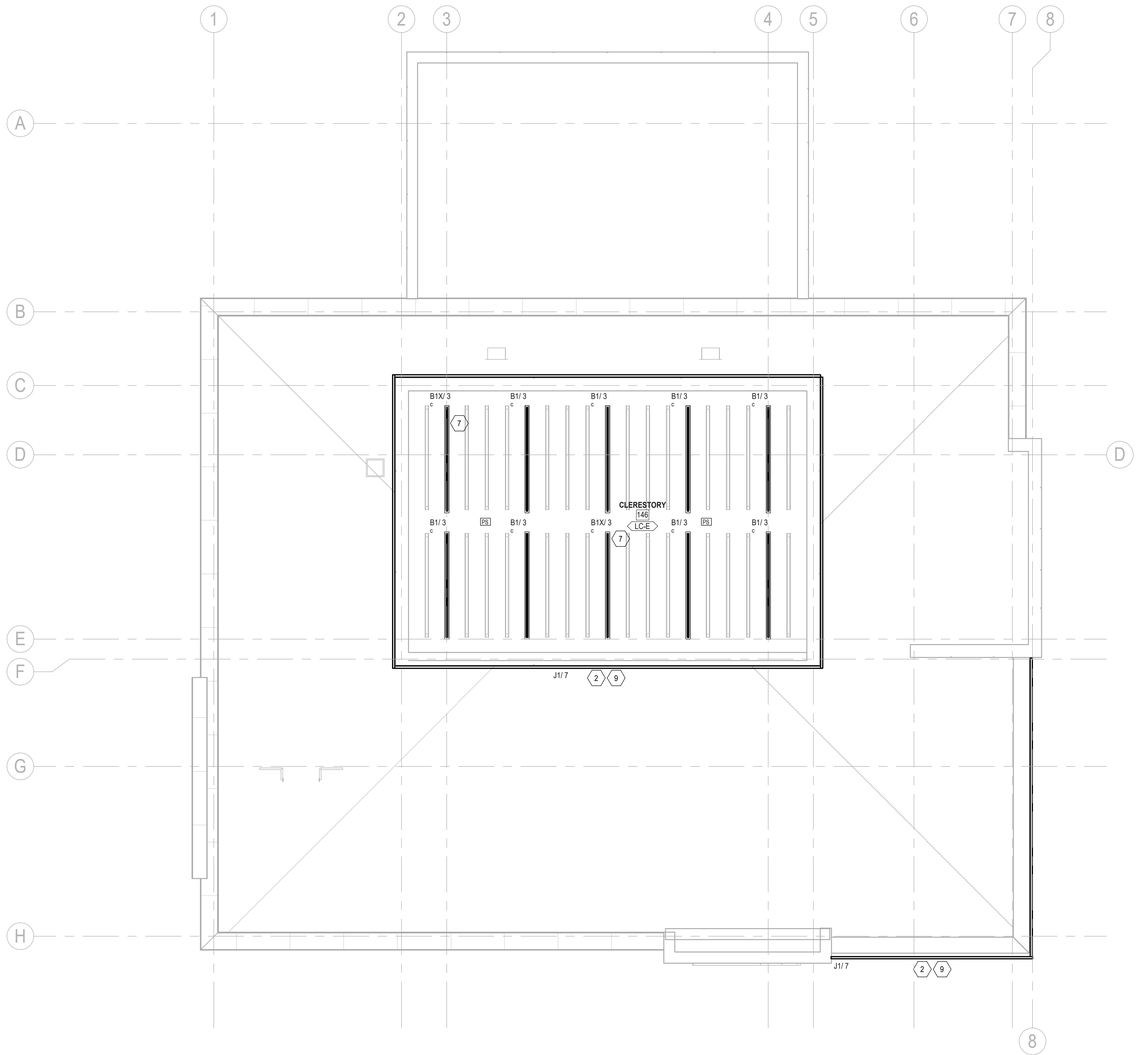

1 CLERESTORY PLAN - LIGHTING
SCALE: 3/16" = 1'-0"

GENERAL NOTES:

A. ALL EMERGENCY LIGHTING AND EXIT SIGNS SHALL BE FED FROM AN UNSWITCHED HOT CONDUCTOR.

B. ALL NORMAL CIRCUITING TO BE FED FROM PANEL A UNLESS NOTED OTHERWISE. CONTRACTOR TO DETERMINE BEST ROUTE FOR CONDUIT AND WIRING.

C. CONTRACTOR SHALL COMPLETE AND SUBMIT LIGHTING UTILITY REBATE APPLICATIONS IF AVAILABLE WITH UTILITY. COORDINATE ALL LIGHTING REBATES WITH OWNER.

D. WHERE EXACT HEIGHTS ARE NOTED VERIFY WITH THE ARCHITECT PRIOR TO INSTALLATION.

KEY NOTES:

1. SECURITY FIXTURE. DO NOT SWITCH. IN AREAS WITH DIMMING CONTROL CONNECT 0-10V CONTROL WIRES TO FIXTURE DRIVER FOR EQUAL LEVEL CONTROL. WHEN POWER IS OFF TO ASSOCIATED SWITCH-LEG THIS FIXTURE SHALL COME TO FULL ILLUMINATION. PROVIDE RELAY TO OPEN 0-10V CONTROL WIRES AS REQUIRED.
2. ROUTE THROUGH LIGHTING CONTROL RELAYS.
3. PROVIDE CONNECTION TO EXTERIOR BUILDING SIGNAGE. LETTERS WILL BE INDIVIDUALLY LIT. CONFIRM EXACT REQUIREMENTS AND LOCATIONS.
4. PROVIDE (1) SPDT CENTER OFF SWITCHES (OCs) FOR CONTROL OF OPEN/CLOSE SIGN. PROVIDE ENGRAVED LABEL ON SWITCH PLATE WITH SPECIFIC LOAD.
5. LIGHTING CONTROL PANEL. SEE CONTROL SCHEDULE AND SPECIFICATION FOR REQUIREMENTS.
6. LIGHTING CONTROL STATION. EACH BUTTON SHALL HAVE PRINTED BLACK ON CLEAR LABEL WITH LOAD DESCRIPTION. AT MULTI-STATION LOCATIONS MOUNT ALL UNDER SHARED COVER PLATE.
7. PROVIDE EMERGENCY INVERTER SURE-LITE #INVM-350 OR EQUAL AND MOUNT IN ACCESSIBLE LOCATION FOR EMERGENCY OPERATION OF TYPE 'B1X' LIGHT FIXTURES.
8. PROVIDE DMX/RGBW CONTROLLER FOR EXTERIOR COLOR CHANGING COVE LIGHTING "R1"SWITCH-LEG "ch1", VERIFY LOCATION WITH OWNER PRIOR TO INSTALLATION.
9. MOUNT LED TAPE IN BOTTOM SIDE OF ROOF EAVE TO WASH DOWN SIDE OF BUILDING. CUT FIXTURE TO LENGTH. MOUNT POWER SUPPLY IN NEAREST CONCEALED ACCESSIBLE CEILING SPACE.

HTG architects

www.htg-architects.com
Minneapolis Bismarck

1010 Mainstreet, Suite 100
Hopkins, MN 55343
Tel: 952.278.8880

PROJECT

MAYO EMPLOYEES FEDERAL CREDIT UNION

NEW BUILDING

605 WEST AVE S.
LA CROSSE, WI

ISSUED SET	2026-03-27

REVISIONS

DATE	NO	

I hereby certify that this plan, specification or report was prepared by me or under my direct supervision and that I am a duly Licensed Professional Engineer under the laws of the state of Minnesota

Matthew W. Fults

40887 2026-03-27
Reg No. Date

emanuelson-podas
consulting engineers

Emanuelson-Podas, Inc.
7705 Bush Lake Road
Edina, MN 55439

(952) 930-0050 | www.epinc.com

CLERESTORY LEVEL PLAN - LIGHTING

Drawn By: FSB Checked By: KDM

E1.2

3392.0002

COPYRIGHT © HTG ARCHITECTS

Autodesk Docs://3392.0002 Mayo EFCU - Lacrosse WI/Mayo EFCU_Lacrosse WI_MEP_2025.rvt
3/26/2026 7:16:32 PM

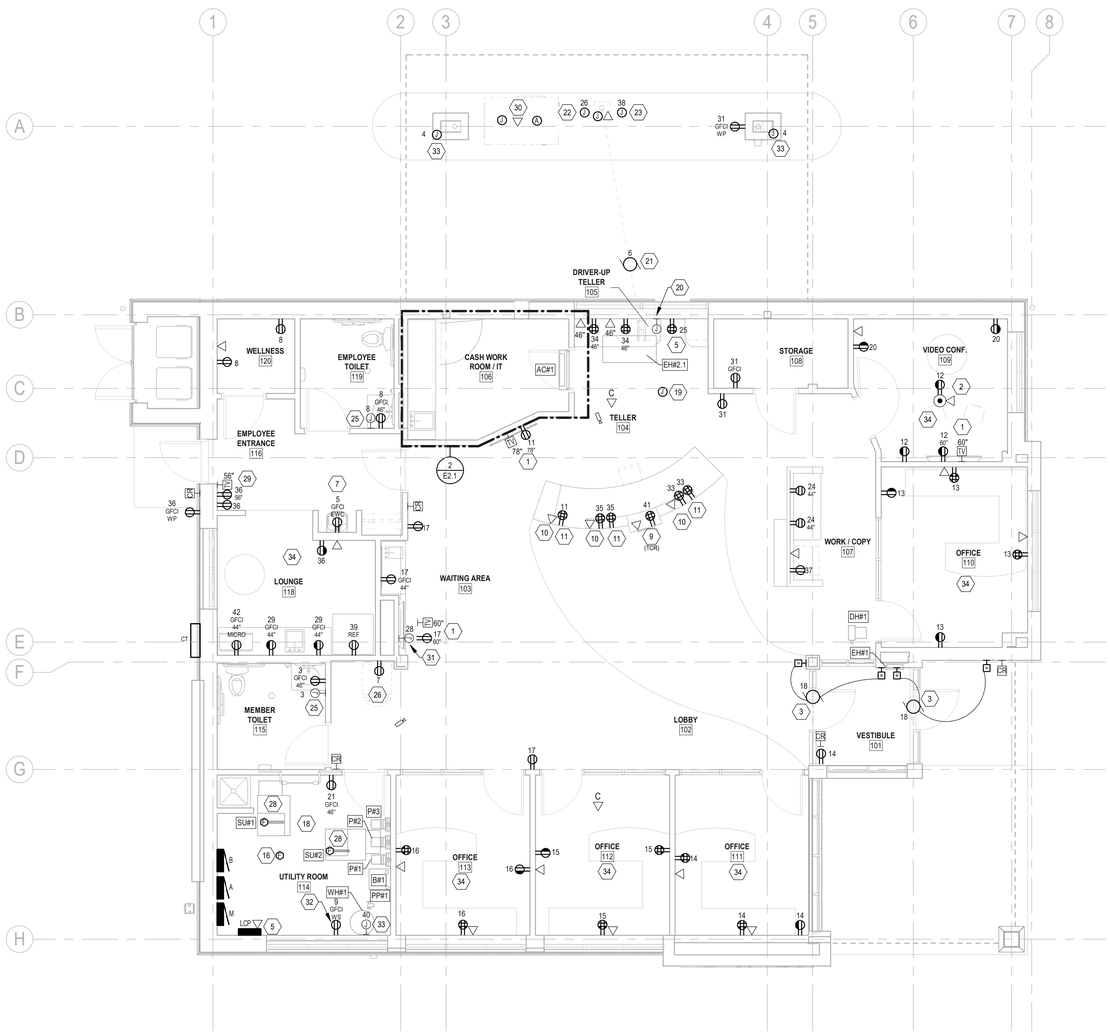

1 MAIN LEVEL PLAN - POWER
SCALE: 3/16" = 1'-0"

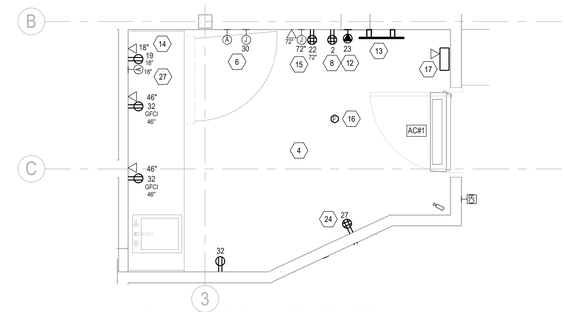

2 CASH WORK ROOM / IT - POWER
SCALE: 3/8" = 1'-0"

GENERAL NOTES:

A. FROM EACH VOICE/DATA AND TV OUTLET PROVIDE TWO GANG BOX W/SINGLE GANG MUDRING AND (1) 1" CONDUIT STUBBED INTO CONCEALED ACCESSIBLE CEILING SPACE.

B. FROM EACH ALARM ROUGH-IN PROVIDE J-BOX AND ROUTE (1) 3/4" CONDUIT TO ALARM HEADEND LOCATION. COORDINATE LOCATION WITH SECURITY VENDOR.

C. SEE MOTOR CONNECTION SCHEDULE FOR MECHANICAL EQUIPMENT CONNECTIONS. SEE MECHANICAL PLANS FOR EXACT EQUIPMENT LOCATIONS.

D. EXACT LOCATION OF ELECTRICAL DEVICES MUST BE VERIFIED WITH FURNITURE SYSTEMS ACTUALLY BEING SUPPLIED BY THE OWNER SO AS NOT TO OCCUR BEHIND BASE UNITS. DO NOT USE ELECTRICAL PLANS FOR DIMENSIONING. FURNITURE SYSTEM SUPPLIER TO PROVIDE DIMENSIONS/LOCATIONS. TYPICAL ALL FURNITURE LOCATIONS.

KEY NOTES:

1. FLAT PANEL TV ROUGH-IN. PROVIDE ARLINGTON MODEL TVBS507 W/DVFR3C BLANK COVER OR EQUAL RECESSED BOX FOR POWER AND TV ROUGH-IN. PROVIDE CONTINUOUS COVER PLATE FOR DEVICES. PROVIDE BLANK INSERTS IN ANY UNUSED SECTIONS. ROUTE (1) 1" CONDUIT INTO CONCEALED ACCESSIBLE CEILING SPACE FOR LOW VOLTAGE CABLING. COORDINATE EXACT LOCATION AND HEIGHT PRIOR TO ROUGH-IN. ADJACENT RECEPTACLE DENOTED "TV" SHALL BE MOUNTED WITHIN THE SAME BOX.
2. PROVIDE FLUSH TYPE STEEL ON-GRADE RATED FLOOR BOX. EXACT LOCATION OF FLOOR OUTLET MUST BE VERIFIED WITH ARCHITECT. WIREMOLD RFB4AR30 W/FPBTCxx COVER OR EQUAL. ARCHITECT SHALL CHOOSE ANY AVAILABLE FINISH SURING SHOP DRAWING REVIEW. PROVIDE (2) RFBADEC BRACKETS FOR LOW VOLTAGE DEVICES. ROUTE (1) 1" BUSHED CONDUIT FOR DATA/TELEPHONE TO TV WALL BOX FOR CABLING PROVIDED BY OTHERS.
3. ELECTRICAL DOOR OPERATOR. WIRE TWO REMOTE PUSHBUTTONS AND CONTROLLER. VERIFY ALL LOCATIONS AND REQUIREMENTS WITH GENERAL CONTRACTOR/ARCHITECT.
4. CONFIRM EXACT ROOM LAYOUT WITH OWNER PRIOR TO INSTALLING ROUGH-INS.
5. PROVIDE CONNECTION TO ELECTRIC DEAL DRAWER. COORDINATE EXACT REQUIREMENTS.
6. PROVIDE CONNECTION TO NIGHT DEPOSIT. CONFIRM EXACT REQUIREMENTS WITH BANK EQUIPMENT SUPPLIER.
7. RECEPTACLE FOR ELECTRIC WATER COOLER. MOUNT SO RECEPTACLE IS CONCEALED BEHIND BOTTOM ACCESS PANEL. FEED FROM GFCI CIRCUIT BREAKER AND LABEL RECEPTACLE.
8. PROVIDE RECEPTACLES FOR DATA RACK. COORDINATE EXACT LOCATIONS WITH OWNER.
9. PROVIDE CONNECTION FOR TCR. VERIFY EXACT LOCATION.
10. MOUNT RECEPTACLES WITHIN CABINET. COORDINATE EXACT LOCATIONS WITH GENERAL CONTRACTOR.
11. CONDUIT FOR POWER AND LOW VOLTAGE CABLING AT MILLWORK SHALL BE CONCEALED. IF CONCEALED ROUTING IS NOT FEASIBLE CONDUIT SHALL BE EMT. SURFACE ROUTED MC CABLE IS NOT ACCEPTABLE. PAINT CONDUIT AND BOXES TO MATCH SURFACE.
12. PROVIDE CONNECTION FOR OWNER VENDOR PROVIDED UPS. ROUTE # 10'S IN 3/4"CONDUIT. COORDINATE EXACT RECEPTACLE REQUIRED. MOUNT IN EQUIPMENT RACK.
13. PROVIDE GROUND BAR AT COMMUNICATIONS RACK 12"x2"x1/4" COPPER WITH ISOLATED STAND OFFS. ROUTE #6 COPPER CONDUCTOR BACK TO GROUNDING ELECTRODE SYSTEM. COORDINATE EXACT LOCATION. PROVIDE CONNECTIONS TO DATA RACKS AND CABLE TRAY.
14. PROVIDE POWER AND DATA CONNECTION FOR OWNER PROVIDED SAFE. CONFIRM EXACT LOCATION PRIOR TO ROUGH IN.
15. PROVIDE FOURPLEX RECEPTACLE AND ONE 6"x6"x4"D JUNCTION BOX FOR OWNER'S VIDEO SURVEILLANCE SYSTEM. FROM JUNCTION BOX STUB (2) 1 1/2" CONDUITS INTO CEILING SPACE FOR CABLING BY OTHERS. VERIFY LOCATIONS WITH SECURITY VENDOR PRIOR TO ROUGH-IN.
16. PROVIDE 120V STAND ALONE SMOKE DETECTOR.
17. ALARM / SECURITY SYSTEM CONTROL PANEL BY OTHERS, VERIFY LOCATION AND ALL REQUIREMENTS. PROVIDE 3/4" TO EACH ALARM AND CARD READER POINT SHOWN. STUB (1) 1-1/2" CONDUIT INTO CEILING SPACE. COORDINATE EXACT REQUIREMENTS WITH BANK EQUIPMENTS DRAWINGS.
18. REFER TO MOTOR CONNECTION SCHEDULE FOR DUCT SMOKE DETECTOR REQUIREMENTS.
19. JUNCTION BOXES ABOVE CEILING, SEE DETAIL (3/E3.1). COORDINATE EXACT LOCATION
20. JUNCTION BOXES UNDER COUNTER, SEE DETAIL (3/E3.1)
21. PROVIDE CONNECTION ABOVE CEILING FOR BLOWER UNIT, SEE DETAIL 1/E3.1. VERIFY CONNECTION LOCATION
22. DRIVE UP CUSTOMER UNIT. PROVIDE WIRING AS PER RISER DIAGRAM. VERIFY WITH BANK EQUIPMENT SUPPLIER. SEE DETAIL 1/E3.1.
23. DRIVE UP VIDEO UNIT. PROVIDE WIRING AS PER DIAGRAM. VERIFY WITH BANK EQUIPMENT SUPPLIER. SEE DETAIL 3/E3.1.
24. COMMUNICATION UTILITY MPOP. ROUTE UTILITY CONDUITS FROM PROPERTY LINE TO THIS LOCATION. PROVIDE 3/4" PLYWOOD FROM FLOOR TO 8' FOR EQUIPMENT MOUNTING. PAINT WITH FIRE RETARDANT GRAY PAINT.
25. MECHANICAL CONTRACTOR TO PROVIDE AUTOMATIC FAUCET AND LOW VOLTAGE TRANSFORMER. ELECTRICAL CONTRACTOR TO PROVIDE JUNCTION BOXES AND MAKE ALL CONNECTIONS. COORDINATE BOX LOCATIONS AND ALL REQUIREMENTS WITH MECHANICAL CONTRACTOR.
26. PROVIDE CONNECTION FOR COIN COUNTER. CONFIRM EXACT REQUIREMENTS AND LOCATION WITH BANK EQUIPMENT SUPPLIER.
27. PROVIDE ALARM ROUGH-IN FOR SAFE AS REQUIRED. COORDINATE WITH SECURITY AND BANK EQUIPMENT VENDORS.
28. PROVIDE 120V STAND-ALONE DUCT SMOKE DETECTOR FOR FURNACE SHUTDOWN. PROVIDE ANY RELAYS NECESSARY FOR A COMPETE CONNECTION. PROVIDE SPACE AGE TECHNOLOGIES #SM-5001 OR APPROVED EQUAL.
29. PROVIDE CONNECTION FOR SECURITY MONITOR. CONFIRM EXACT LOCATION.
30. PROVIDE ROUGH-IN FOR FUTURE ATM. ROUTE (3) #10 AND (1) #10 GND IN 1 1/4" CONDUIT. PROVIDE (2) 1" CONDUITS TO ROOM 106 FOR COMMUNICATIONS AND ALARM. CONFIRM EXACT SIZE AND TO COVER CONDUITS.
31. PROVIDE CONNECTION TO FIREPLACE. CONFIRM EXACT REQUIREMENTS. PROVIDE CONTROL ROUGH-IN AT REMOTE LOCATION AS DIRECTED BY GC.
32. PROVIDE CONNECTION TO WATER SOFTENER PROVIDED BY MECHANICAL.
33. PROVIDE ELECTRIC HEAT TAPE IN ROOFDRAIN TO OUTLET. RAYCHEM #GM-1X (120V) OR EQUAL. PROVIDE RAYCHEM AMC-F5 T-STAT FOR CONTROL. MOUNT SENSOR ON ROOF. MOUNT CONTROL BOX IN ACCESSIBLE CEILING SPACE NEAR T-STAT. PROVIDE RAYCHEM E304 CONTACTOR FOR CONTROL OF MULTIPLE CIRCUIT AS REQUIRED. APPROXIMATELY 20' OF TAPE.
34. ALL RECEPTACLES IN SPACE SHALL BE SPLIT RECEPTACLES WITH TOP RECEPTACLE BEING CONTROLLED WITH ROOM OCCUPANCY SENSOR. OCCUPANCY SENSOR SHALL TURN OFF CONTROLLED RECEPTACLE 20 MINUTES AFTER NO OCCUPANCY HAS BEEN SENSED IN SPACE.

HTG architects
www.htg-architects.com
Minneapolis Bismarck
1010 Mainstreet, Suite 100
Hopkins, MN 55343
Tel: 952.278.8880

PROJECT

MAYO EMPLOYEES FEDERAL CREDIT UNION

NEW BUILDING
605 WEST AVE S.
LA CROSSE, WI

ISSUED SET	2026-03-27

REVISIONS

DATE	NO	

I hereby certify that this plan, specification or report was prepared by me or under my direct supervision and that I am a duly Licensed Professional Engineer under the laws of the state of Minnesota

Matthew W. Fults

40887 2026-03-27
Reg No. Date

emanuelson-podas consulting engineers
Emanuelson-Podas, Inc.
7705 Bush Lake Road
Edina, MN 55439
(952) 930-0050 | www.epinc.com

MAIN LEVEL PLAN - POWER

Drawn By: FSB Checked By: KDM

E2.1

3392.0002

COPYRIGHT © HTG ARCHITECTS

Autodesk Docs://3392.0002 Mayo EFCU - Lacrosse WI/Mayo EFCU_Lacrosse WI_MEP_2025.rvt
3/26/2026 7:15:37 PM

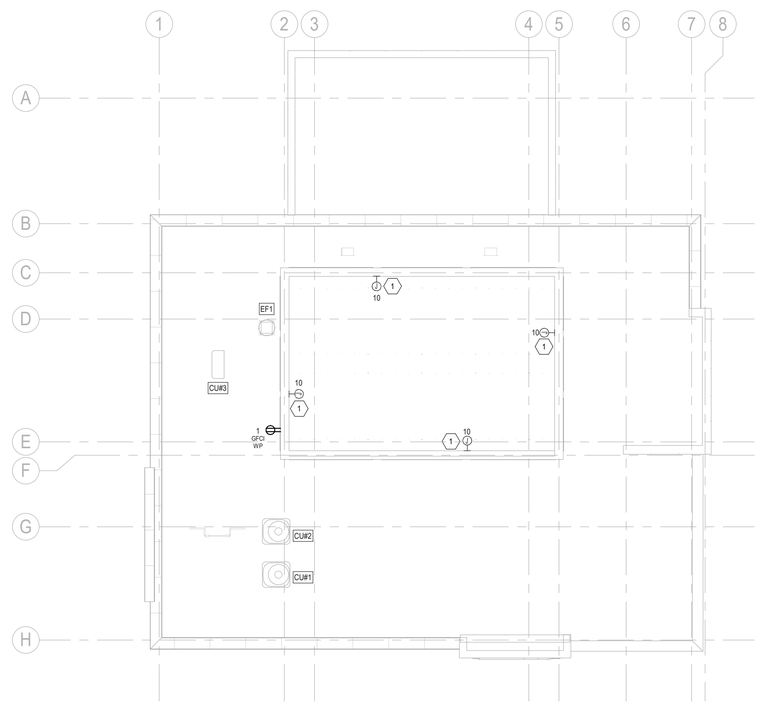

1 CLERESTORY PLAN - POWER

SCALE: 1/8" = 1'-0"

GENERAL NOTES:

A. SEE MOTOR CONNECTION SCHEDULE FOR MECHANICAL EQUIPMENT CONNECTIONS. SEE MECHANICAL PLANS FOR EXACT EQUIPMENT LOCATIONS.

B. ALL CIRCUITING TO BE FED FROM PANEL B UNLESS NOTED OTHERWISE. CONTRACTOR TO DETERMINE BEST ROUTE FOR CONDUIT AND WIRING.

KEY NOTES:

1. PROVIDE CONNECTION TO POWERED WINDOW SHADE SYSTEM. COORDINATE EXACT LOCATIONS AND REQUIREMENTS. PROVIDE CONNECTION TO SHADE SYSTEM CONTROLLERS(S). PROVIDE CONNECTION AT ALL SHADE MOTOR LOCATIONS. PROVIDE ALL REQUIRED POWER AND CONTROL WIRING. INSTALL UP/DOWN CONTROLLER(S). COORDINATE EXACT LOCATION WITH ARCHITECT. ASSUME LOCATIONS IS NEAR SPACE LIGHTING CONTROL.

HTG architects

www.htg-architects.com

Minneapolis Bismarck

1010 Mainstreet, Suite 100
Hopkins, MN 55343
Tel: 952.278.8880

PROJECT

MAYO EMPLOYEES FEDERAL CREDIT UNION

NEW BUILDING

605 WEST AVE S.
LA CROSSE, WI

ISSUED SET	2026-03-27

REVISIONS

DATE	NO	

I hereby certify that this plan, specification or report was prepared by me or under my direct supervision and that I am a duly Licensed Professional Engineer under the laws of the state of Minnesota

Matthew W. Fults

40887 2026-03-27
Reg No. Date

emanuelson-podas
consulting engineers

Emanuelson-Podas, Inc.
7705 Bush Lake Road
Edina, MN 55439

(952) 930-0050 | www.epinc.com

CLERESTORY LEVEL PLAN - POWER

Drawn By: FSB Checked By: KDM

E2.2

3392.0002

COPYRIGHT © HTG ARCHITECTS

Autodesk Docs://3392.0002 Mayo EFCU - Lacrosse WI/Mayo EFCU_Lacrosse WI_MEP_2025.rvt
3/26/2026 7:16:39 PM

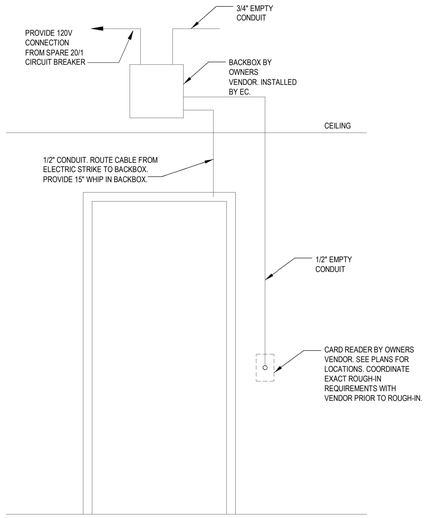

1 CARD READER DETAIL
NO SCALE

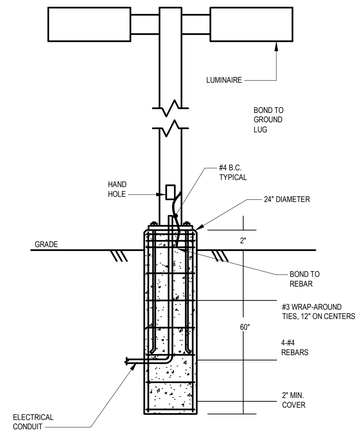

2 POLE BASE DETAIL
NO SCALE

3Ø FEEDER SCHEDULE

GENERAL NOTES:

A. APPROVED CONDUCTOR INSULATIONS: THHN/THWN, THHN/THWN-2, XHHW-2. REFER TO PROJECT SPECIFICATIONS FOR INSULATION TYPE REQUIRED WITH VARYING CONDUCTOR SIZES AND...

B. CONDUIT TYPE REQUIREMENTS VARY DEPENDING ON APPLICATION AND LOCATION OF FEEDER. REFER TO PROJECT SPECIFICATIONS FOR REQUIREMENTS.

C. NEUTRAL SHALL BE THE SAME SIZE AS THE PHASE CONDUCTOR UNLESS OTHERWISE NOTED.

	COPPER		COMPACT STRAND ALUMINUM ALLOY		
MARK (AMPACITY)	FEEDER 3W (NO NEUTRAL) PH-GND-C	FEEDER 4W (W/ NEUTRAL) PH-GND-C	FEEDER 3W (NO NEUTRAL) PH-GND-C	FEEDER 4W (W/ NEUTRAL) PH-GND-C	MARK (AMPACITY)
20	3#12 - 1#12 GND - 3/4"C	4#12 - 1#12 GND - 3/4"C	---	---	20
30	3#10 - 1#10 GND - 3/4"C	4#10 - 1#10 GND - 3/4"C	---	---	30
40	3#8 - 1#10 GND - 3/4"C	4#8 - 1#10 GND - 1"C	---	---	40
50	3#6 - 1#10 GND - 1"C	4#6 - 1#10 GND - 1"C	---	---	50
50T	---	4#6 - 1#8 GND (SSBJ) - 1"C	---	---	50T
60	3#4 - 1#10 GND - 1"C	4#4 - 1#10 GND - 1 1/4"C	---	---	60
70	3#4 - 1#8 GND - 1 1/4"C	4#4 - 1#8 GND - 1 1/4"C	---	---	70
80	3#3 - 1#8 GND - 1 1/4"C	4#3 - 1#8 GND - 1 1/4"C	---	---	80
90	3#2 - 1#8 GND - 1 1/4"C	4#2 - 1#8 GND - 1 1/2"C	---	---	90
100	3#1 - 1#8 GND - 1 1/2"C	4#1 - 1#8 GND - 1 1/2"C	3#1/0 - 1#6 GND - 1 1/2"C	4#1/0 - 1#6 GND - 2"C	100
100P	3#3 - 1#8 GND - 1 1/4"C	4#3 - 1#8 GND - 1 1/4"C	3#1 - 1#6 GND - 1 1/2"C	4#1 - 1#6 GND - 1 1/2"C	100P
100T	---	4#3 - 1#8 GND (SSBJ) - 1 1/4"C	---	4#1 - 1#6 GND (SSBJ) - 1 1/2"C	100T
125	3#1 - 1#6 GND - 1 1/2"C	4#1 - 1#6 GND - 1 1/2"C	3#2/0 - 1#4 GND - 2"C	4#2/0 - 1#4 GND - 2"C	125
150	3#1/0 - 1#6 GND - 1 1/2"C	4#1/0 - 1#6 GND - 2"C	3#3/0 - 1#4 GND - 2"C	4#3/0 - 1#4 GND - 2 1/2"C	150
150T	---	4#1/0 - 1#6 GND (SSBJ) - 2"C	---	4#3/0 - 1#4 GND (SSBJ) - 2 1/2"C	150T
175	3#2/0 - 1#6 GND - 2"C	4#2/0 - 1#6 GND - 2"C	3#4/0 - 1#4 GND - 2"C	4#4/0 - 1#4 GND - 2 1/2"C	175
200	3#3/0 - 1#6 GND - 2"C	4#3/0 - 1#6 GND - 2"C	3#250 - 1#4 GND - 2 1/2"C	4#250 - 1#4 GND - 3"C	200
225	3#4/0 - 1#4 GND - 2"C	4#4/0 - 1#4 GND - 2 1/2"C	3#300 - 1#2 GND - 2 1/2"C	4#300 - 1#2 GND - 3"C	225
225T	---	4#4/0 - 1#2 GND (SSBJ) - 2 1/2"C	---	4#300 - 1#1/0 GND (SSBJ) - 3"C	225T
250	3#250 - 1#4 GND - 2-1/2"C	4#250 - 1#4 GND - 3"C	3#350 - 1#2 GND - 3"C	4#350 - 1#2 GND - 3"C	250
300	3#350 - 1#4 GND - 3"C	4#350 - 1#4 GND - 3"C	3#500 - 1#2 GND - 3"C	4#500 - 1#2 GND - 3-1/2"C	300
400	3#500 - 1#3 GND - 3"C	4#500 - 1#3 GND - 3-1/2"C	3#750 - 1#1 GND - 3-1/2"C	4#750 - 1#1 GND - 4"C	400
400P	(2 SETS) 3#300 - 1#3 GND - 2"C	(2 SETS) 4#300 - 1#3 GND - 2 1/2"C	(2 SETS) 3#250 - 1#1 GND - 2 1/2"C	(2 SETS) 4#250 - 1#1 GND - 3"C	400P
400T	---	(2 SETS) 4#3/0 - 1#1/0 GND (SSBJ) - 2 1/2"C	---	(2 SETS) 4#250 - 1#1/0 GND (SSBJ) - 3"C	400T
500	(2 SETS) 3#250 - 1#2 GND - 2 1/2"C	(2 SETS) 4#250 - 1#2 GND - 3"C	(2 SETS) 3#350 - 1#1/0 GND - 3"C	(2 SETS) 4#350 - 1#1/0 GND - 3"C	500
500T	---	(2 SETS) 4#250 - 1#1/0 GND (SSBJ) - 3"C	---	(2 SETS) 4#350 - 1#3/0 GND (SSBJ) - 3"C	500T
600	(2 SETS) 3#350 - 1#1 GND - 3"C	(2 SETS) 4#350 - 1#1 GND - 3"C	(2 SETS) 3#500 - 1#2/0 GND - 3"C	(2 SETS) 4#500 - 1#2/0 GND - 3-1/2"C	600
800	(2 SETS) 3#500 - 1#1/0 GND - 3"C	(2 SETS) 4#500 - 1#1/0 GND - 3-1/2"C	(2 SETS) 3#750 - 1#3/0 GND - 3-1/2"C	(2 SETS) 4#750 - 1#3/0 GND - 4"C	800
800P	(3 SETS) 3#300 - 1#1/0 GND - 2 1/2"C	(3 SETS) 4#300 - 1#1/0 GND - 3"C	(3 SETS) 3#400 - 1#3/0 GND - 3"C	(3 SETS) 4#400 - 1#3/0 GND - 3 1/2"C	800P
800T	---	(3 SETS) 4#300 - 1#2/0 GND (SSBJ) - 3"C	---	(3 SETS) 4#400 - 1#4/0 GND (SSBJ) - 3 1/2"C	800T
1000	(3 SETS) 3#400 - 1#2/0 GND - 3"C	(3 SETS) 4#400 - 1#2/0 GND - 3"C	(3 SETS) 3#600 - 1#4/0 GND - 3 1/2"C	(3 SETS) 4#600 - 1#4/0 GND - 4"C	1000
1000T	---	(3 SETS) 4#400 - 1#3/0 GND (SSBJ) - 3 1-2"C	---	(3 SETS) 4#600 - 1#250 GND (SSBJ) - 4"C	1000T
1200	(4 SETS) 3#350 - 1#3/0 GND - 3"C	(4 SETS) 4#350 - 1#3/0 GND - 3"C	(4 SETS) 3#500 - 1#250 GND - 3"C	(4 SETS) 4#500 - 1#250 GND - 3 1/2"C	1200
1600	(5 SETS) 3#400 - 1#4/0 GND - 3"C	(5 SETS) 4#400 - 1#4/0 GND - 3 1/2"C	(5 SETS) 3#600 - 1#350 GND - 3 1/2"C	(5 SETS) 4#600 - 1#350 GND - 4"C	1600
1600T	---	(5 SETS) 4#400 - 1#250 GND (SSBJ) - 3 1/2"C	---	(5 SETS) 4#600 - 1#400 GND (SSBJ) - 4"C	1600T
2000	(6 SETS) 3#400 - 1#250 GND - 3"C	(6 SETS) 4#400 - 1#250 GND - 3 1/2"C	(6 SETS) 3#600 - 1#400 GND - 3-1/2"C	(6 SETS) 4#600 - 1#400 GND - 4"C	2000

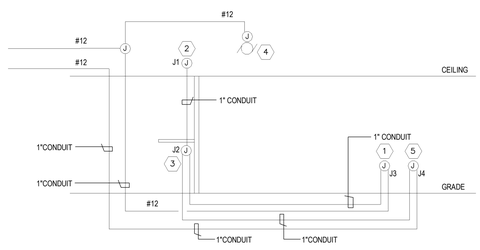

TYPICAL FOR ONE (1) DRIVE UP CUSTOMER UNIT. TWO 20A, 120V CIRCUITS REQUIRED FOR EACH UNIT, 2 CIRCUITS TOTAL.

VERIFY ALL CONDUIT, POWER, AND LOCATION REQUIREMENTS WITH BANK EQUIPMENT SUPPLIER PRIOR TO ANY WORK. PROVIDE PULLSTRINGS IN ALL EMPTY CONDUIT.

DETAIL KEY NOTES:

1. DRIVE UP CUSTOMER UNIT, PROVIDE WIRING AS PER RISER DIAGRAM. VERIFY WITH BANK EQUIPMENT SUPPLIER.
2. JUNCTION BOXES ABOVE CEILING.
3. JUNCTION BOXES UNDER COUNTER.
4. PROVIDE CONNECTION ABOVE CEILING FOR BLOWER UNIT.
5. DRIVE UP VIDEO UNIT, PROVIDE WIRING AS PER RISER DIAGRAM. VERIFY WITH BANK EQUIPMENT SUPPLIER.

3 DRIVE UP EQUIPMENT RISER DETAIL
NO SCALE

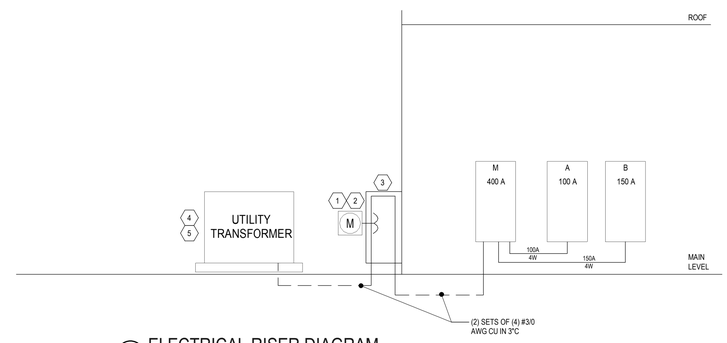

4 ELECTRICAL RISER DIAGRAM
NO SCALE

RISER GENERAL NOTES:

A. FEEDERS SHALL BE 4 WIRE (4W) UNLESS DENOTED WITH "3W" WHICH SHALL BE 3 WIRE(3W) ALL FEEDERS SHALL HAVE EQUIPMENT GROUND CONDUCTOR.

B. VERIFY ALL UTILITY REQUIREMENTS WITH UTILITY PRIOR TO INSTALLATION

KEY NOTES:

1. METER SOCKET, ENCLOSURE AND CONDUIT FOR CT WIRING PROVIDED BY CONTRACTOR.
2. METER CT'S AND CT WIRING PROVIDED BY THE ELECTRICAL UTILITY.
3. PROVIDE WALL MOUNT CT CABINET. VERIFY REQUIREMENTS WITH UTILITY.
4. TRANSFORMER PROVIDED BY UTILITY.
5. TRANSFORMER CONCRETE PAD AND BOLLARDS PROVIDED BY THE CONTRACTOR.

GENERAL NOTES:

A. ALL GROUNDING ELECTRODE CONDUCTORS PENETRATING THROUGH FOUNDATION WALL OR BASEMENT INTERIOR FLOOR SLAB SHALL BE TRANSITIONED TO SOLID ROD A MINIMUM OF 2'-0" TO EITHER SIDE OF WATERPROOFING MEMBRANE TO ALLOW FOR HEAT WELD BY WATERPROOFING CONTRACTOR.

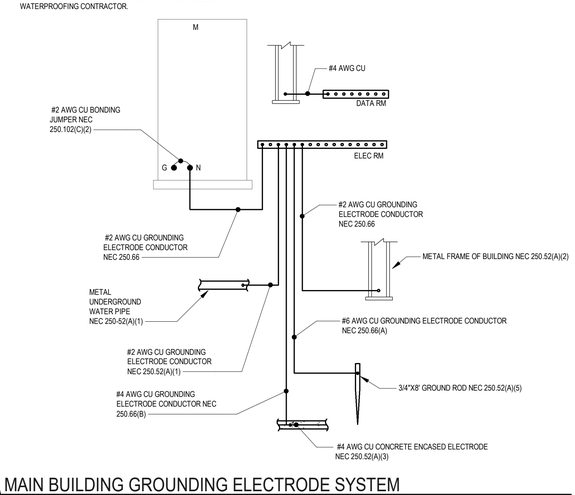

5 MAIN BUILDING GROUNDING ELECTRODE SYSTEM
NO SCALE

HTG architects
www.htg-architects.com
Minneapolis Bismarck
1010 Mainstreet, Suite 100
Hopkins, MN 55343
Tel: 952.278.8880

PROJECT

MAYO EMPLOYEES FEDERAL CREDIT UNION

NEW BUILDING
605 WEST AVE S.
LA CROSSE, WI

ISSUED SET 2026-03-27

REVISIONS

DATE	NO	

I hereby certify that this plan, specification or report was prepared by me or under my direct supervision and that I am a duly Licensed Professional Engineer under the laws of the state of Minnesota

Matthew W. Fults

40887 2026-03-27
Reg No. Date

emanuelson-podas consulting engineers
Emanuelson-Podas, Inc.
7705 Bush Lake Road
Edina, MN 55439
(952) 930-0050 | www.epinc.com

ELECTRICAL DETAILS

Drawn By: FSB Checked By: KDM

E3.1

3392.0002

COPYRIGHT © HTG ARCHITECTS

Autodesk Docs://3392.0002 Mayo EFCU - Lacrosse WI/Mayo EFCU_Lacrosse WI_MEP_2025.rvt
3/26/2026 7:16:41 PM

COMcheck-Web™

Compliance Certificate

Project Information

Energy Code:	2021 IECC
Project Title:	MAYO EMPLOYEES FEDERAL CREDIT UNION
Location:	La Crosse, Wisconsin
Climate Zone:	5a
Project Type:	New Construction
Project No:	93449
All Electric:	false
Is Renewable:	false
Has Battery:	false
Has Charger:	false
Has Heat Pump	false

Construction Site:
605 West Ave S.
La Crosse , Wisconsin 54601

Owner/Agent:
Mayo Employees Federal Credit Union
Wisconsin

Designer/Contractor:
Felipe Soares
Emanulson-Podas, Inc.
Edina , Minnesota 55439
952-930-0050
fsoares@epinc.com

Notes:

Building Area

Description	Floor Area
1-Office (Office) : Nonresidential	2785

Interior Lighting Compliance Certificate

Project Information

Energy Code:	2021 IECC
Project Title:	MAYO EMPLOYEES FEDERAL CREDIT UNION
Location:	La Crosse, Wisconsin
Climate Zone:	5a
Project Type:	New Construction

Construction Site:
605 West Ave S.
La Crosse , Wisconsin 54601

Owner/Agent:
Mayo Employees Federal Credit Union
Wisconsin

Designer/Contractor:
Felipe Soares
Emanulson-Podas, Inc
Edina , Minnesota 55439
952-930-0050
fsoares@epinc.com

Allowed Interior Lighting Power

A Area Category	B Floor Area (ft2)	C Allowed Watts / ft2	D Allowed Watts
1-Bank Building (Bank:Banking Activity Area)	2785	0.61	
Total Allowed Watts:			1782

Proposed Interior Lighting Power

A Fixture ID : Description / Lamp / Wattage Per Lamp / Ballast	B # of Fixture	C Fixture Watt.	D (B X C)
1-Bank Building (Bank:Banking Activity Area)			
A1: A1: LED:	31	16	496
A1X: A1X: LED:	9	16	144
B1: B1: LED:	8	48	384
B1X: B1X: LED:	2	48	96
C2: C2: LED:	1	15	15
E1: E1: LED:	2	2	4
F1: F1: LED:	3	25	75
G1: G1: LED:	1	35	35
G1X: G1X: LED:	1	35	35
Total Proposed Watts:			1284

Proposed Interior Lighting Controls

Fixture	Lighting Control
1-Bank Building (Bank:Banking Activity Area)	
A1: A1: LED:	Local Control, Restricted Manual On, Auto Full Off(50%)
A1X: A1X: LED:	Local Control, Restricted Manual On, Auto Full Off(50%)
B1: B1: LED:	Local Control, Restricted Manual On, Auto Full Off(50%)
B1X: B1X: LED:	Local Control, Restricted Manual On, Auto Full Off(50%)
C2: C2: LED:	Local Control, Restricted Manual On, Auto Full Off(50%)
E1: E1: LED:	Local Control, Restricted Manual On, Auto Full Off(50%)
F1: F1: LED:	Local Control, Restricted Manual On, Auto Full Off(50%)
G1: G1: LED:	Local Control, Restricted Manual On, Auto Full Off(50%)
G1X: G1X: LED:	Local Control, Restricted Manual On, Auto Full Off(50%)

Interior Lighting PASSES: Design 28% better than code

Interior Lighting Compliance Statement

Compliance Statement: The proposed interior lighting design represented in this document is consistent with the building plans, specifications, and other calculations submitted with this permit application. The proposed interior lighting systems have been designed to meet the 2021 IECC requirements in COMcheckWeb and to comply with any applicable mandatory requirements listed in the Inspection Checklist.

Felipe Soares - Electrical Designer — Felipe Soares — 03/27/2026

Name - Title **Signature** **Date**

Exterior Lighting Compliance Certificate

Project Information

Energy Code:	2021 IECC
Project Title:	MAYO EMPLOYEES FEDERAL CREDIT UNION
Location:	La Crosse, Wisconsin
Climate Zone:	5a
Project Type:	New Construction
Exterior Lighting Zone:	High activity metropolitan commercial district (LZ4)

Construction Site:
605 West Ave S.
La Crosse , Wisconsin 54601

Owner/Agent:
Mayo Employees Federal Credit Union
Wisconsin

Designer/Contractor:
Felipe Soares
Emanulson-Podas, Inc.
Edina , Minnesota 55439
952-930-0050
fsoares@epinc.com

Allowed Exterior Lighting Power

A Area/Surface Category	B Quantity	C Allowed Watts / ft2	D Tradable Wattage	E Allowed Watts (B X C)
Ext Area -Parking Lot (Parking area)	15910 ft2	0.08	No	1272.8
Ext Area - Drive Lane (ATM/Night depository location) (c)	2 machines	45.00	No	90.0
Ext Area - Emp ENtrance (Illuminated area of facade wall or surface)	30 ft2	0.15	No	4.5
Ext Area - Main Entry (Entry canopy)	253 ft2	0.40	No	101.2
Total Tradable Watts (a):				1374
Base Site Allowance (b):				900
Total Allowed Watts:				2400

(a) Wattage tradeoffs are only allowed between tradable areas/surfaces.
(b) A base site allowance equal to 400 watts may be applied toward compliance of both non-tradable and tradable areas/surfaces.

Proposed Exterior Lighting Power

A Fixture ID : Description / Lamp / Wattage Per Lamp / Ballast	B Lamps/Fixture	C # of Fixture	D Fixture Watt.	E (C X D)
Ext Area -Parking Lot (Parking area, 15910 ft2); Tradeable Wattage				
P1: P1: LED:	0	6	170	1020
Ext Area - Drive Lane (ATM/Night depository location, 2 machines); Tradeable Wattage				
D1: D1: LED:	0	12	26	312
Ext Area - Emp ENtrance (Illuminated area of facade wall or surface, 30 ft2); Tradeable Wattage				
N1X: N1X: LED:	0	1	21	21
Ext Area - Main Entry (Entry canopy, 253 ft2); Tradeable Wattage				
C1: C1: LED:	0	3	15	45
C1X: C1X: LED:	0	2	15	30

A Fixture ID : Description / Lamp / Wattage Per Lamp / Ballast	B Lamps/Fixture	C # of Fixture	D Fixture Watt.	E (C X D)
Total Tradable Proposed Watts:				1095

Proposed Exterior Lighting Controls

Fixture	Lighting Control
Ext Area -Parking Lot (Parking area, 15910 ft2)	
P1: P1: LED:	Daylight Shutoff, Facade or Landscape
Ext Area - Drive Lane (ATM/Night depository location, 2 machines)	
D1: D1: LED:	Daylight Shutoff, Facade or Landscape
Ext Area - Emp ENtrance (Illuminated area of facade wall or surface, 30 ft2)	
N1X: N1X: LED:	Daylight Shutoff, Facade or Landscape
Ext Area - Main Entry (Entry canopy, 253 ft2)	
C1: C1: LED:	Daylight Shutoff, Facade or Landscape
C1X: C1X: LED:	Daylight Shutoff, Facade or Landscape

Exterior Lighting PASSES: Design 50% better than code

Exterior Lighting Compliance Statement

Compliance Statement: The proposed exterior lighting design represented in this document is consistent with the building plans, specifications, and other calculations submitted with this permit application. The proposed exterior lighting systems have been designed to meet the 2021 IECC requirements in COMcheckWeb and to comply with any applicable mandatory requirements listed in the Inspection Checklist.

Felipe Soares - Electrical Designer — Felipe Soares — 03/27/2026

Name - Title **Signature** **Date**

Fixture	Lighting Control
B1X: B1X: LED:	Local Control, Restricted Manual On, Auto Full Off(50%)
C2: C2: LED:	Local Control, Restricted Manual On, Auto Full Off(50%)
E1: E1: LED:	Local Control, Restricted Manual On, Auto Full Off(50%)
F1: F1: LED:	Local Control, Restricted Manual On, Auto Full Off(50%)
G1: G1: LED:	Local Control, Restricted Manual On, Auto Full Off(50%)
G1X: G1X: LED:	Local Control, Restricted Manual On, Auto Full Off(50%)

Interior Lighting PASSES: Design 28% better than code

Interior Lighting Compliance Statement

Compliance Statement: The proposed interior lighting design represented in this document is consistent with the building plans, specifications, and other calculations submitted with this permit application. The proposed interior lighting systems have been designed to meet the 2021 IECC requirements in COMcheckWeb and to comply with any applicable mandatory requirements listed in the Inspection Checklist.

Felipe Soares - Electrical Designer — Felipe Soares — 03/27/2026

Name - Title **Signature** **Date**

Inspection Checklist

Energy Code: 2021 IECC

Requirements: 100% were addressed directly in the COMcheck software

Text in the "Comments/Assumptions" column is provided by the user in the COMcheck Requirements screen. For each requirement, the user certifies that a code requirement will be met and how that is documented, or that an exception is being claimed. Where compliance is itemized in a separate table, a reference to that table is provided.

Plan Review

Section # & Req.ID	Plan Review	Complies?	Comments/Assumptions
C406 [PR9]'	Plans, specifications, and/or calculations provide all information with which compliance can be determined for the additional energy efficiency package options.	☐ Complies ☐ Does Not Comply ☐ Not Observable ☐ Not Applicable	**Location on plans/spec:** E1.1, E1.2, E3.2, E3.3, E3.4
C103.2 [PR4]'	Plans, specifications, and/or calculations provide all information with which compliance can be determined for the interior lighting and electrical systems and equipment and document where exceptions to the standard are claimed. Information provided should include interior lighting power calculations, wattage of bulbs and ballasts, transformers and control devices	☐ Complies ☐ Does Not Comply ☐ Not Observable ☐ Not Applicable	**Location on plans/spec:** E1.1, E1.2, E3.2, E3.3, E3.4
C103.2 [PR8]'	Plans, specifications, and/or calculations provide all information with which compliance can be determined for the exterior lighting and electrical systems and equipment and document where exceptions to the standard are claimed. Information provided should include exterior lighting power calculations, wattage of bulbs and ballasts, transformers and control devices.	☐ Complies ☐ Does Not Comply ☐ Not Observable ☐ Not Applicable	**Location on plans/spec:** E1.1, E1.2, E3.2, E3.3, E3.4

Additional Comments/Assumptions:

1	High Impact (Tier 1)	2	Medium Impact (Tier 2)	3	Low Impact (Tier 3)

Autodesk Docs://3392.0002 Mayo EFCU - Lacrosse WI/Mayo EFCU_Lacrosse WI_MEP_2025.rvt
3/26/2026 7:16:43 PM

HTG architects
www.htg-architects.com
Minneapolis Bismarck
1010 Mainstreet, Suite 100
Hopkins, MN 55343
Tel: 952.278.8880

PROJECT

MAYO EMPLOYEES FEDERAL CREDIT UNION

NEW BUILDING
605 WEST AVE S.
LA CROSSE, WI

ISSUED SET	2026-03-27
REVISIONS	
DATE	NO

I hereby certify that this plan, specification or report was prepared by me or under my direct supervision and that I am a duly Licensed Professional Engineer under the laws of the state of Minnesota

Matthew W. Fults

40887 — 2026-03-27
Reg No. — Date

emanuelson-podas consulting engineers
Emanuelson-Podas, Inc.
7705 Bush Lake Road
Edina, MN 55439
(952) 930-0050 | www.epinc.com

ENERGY COMPLIANCE FORMS

Drawn By: FSB Checked By: KDM

E3.2

3392.0002

COPYRIGHT © HTG ARCHITECTS

Rough-In Electrical Inspection

Section # & Req.ID	Rough-In Electrical Inspection	Complies?	Comments/Assumptions
C405.2.3.1 [EL22]^{1}	Spaces required to have light-reduction controls have a manual control that allows the occupant to reduce the connected lighting load in a reasonably uniform illumination pattern >= 50 percent.	☐ Complies ☐ Does Not Comply ☐ Not Observable ☐ Not Applicable	**Location on plans/spec:** E1.1, E1.2, E3.2, E3.3, E3.4
C405.2.7 [EL28]^{1}	Automatic lighting controls for exterior lighting installed. Controls will be daylight controlled, set based on business operation time-of-day, or reduce connected lighting > 30%.	☐ Complies ☐ Does Not Comply ☐ Not Observable ☐ Not Applicable	**Location on plans/spec:** E1.1, E1.2, E3.2, E3.3, E3.4
C405.7 [EL26]^{2}	Low-voltage dry-type distribution electric transformers meet the minimum efficiency requirements of Table C405.6.	☐ Complies ☐ Does Not Comply ☐ Not Observable ☐ Not Applicable	**Exception:** Requirement does not apply.
C405.8 [EL27]^{2}	Electric motors meet the minimum efficiency requirements of Tables C405.7(1) through C405.7(4). Efficiency verified through certification under an approved certification program or the equipment efficiency ratings shall be provided by motor manufacturer (where certification programs do not exist).	☐ Complies ☐ Does Not Comply ☐ Not Observable ☐ Not Applicable	**Location on plans/spec:** E2.1, E2.2, E4.1
C405.9.1, C405.9.2 [EL28]^{2}	Escalators and moving walks comply with ASME A17.1/CSA B44 and have automatic controls configured to reduce speed to the minimum permitted speed in accordance with ASME A17.1/CSA B44 or applicable local code when not conveying passengers.	☐ Complies ☐ Does Not Comply ☐ Not Observable ☐ Not Applicable	**Exception:** Requirement does not apply.
C405.10 [EL29]^{2}	Total voltage drop across the combination of feeders and branch circuits <= 5%.	☐ Complies ☐ Does Not Comply ☐ Not Observable ☐ Not Applicable	**Location on plans/spec:** E2.1, E2.2
C405.1.1 [EL30]^{2}	At least 90% of dwelling unit permanently installed lighting shall have lamp efficacy >= 65 lm/W or luminaires with efficacy >= 45 lm/W or comply with C405.2.4 or C405.3.	☐ Complies ☐ Does Not Comply ☐ Not Observable ☐ Not Applicable	**Exception:** Requirement does not apply.
C405.11, C405.11.1 [EL31]^{2}	50% of 15/20 amp receptacles installed in enclosed offices, conference rooms, copy rooms, break rooms, classrooms and workstations and > 25% of branch circuit feeders for modular furniture will have automatic receptacle control in accordance with C405.11.1.	☐ Complies ☐ Does Not Comply ☐ Not Observable ☐ Not Applicable	**Location on plans/spec:** E2.1, E2.2
C405.2.1, C405.2.1.1 [EL18]^{1}	Occupancy sensors installed in classrooms/lecture/training rooms, conference/meeting/multipurpose rooms, copy/print rooms, lounges/breakrooms, enclosed offices, open plan office areas, restrooms, storage rooms, locker rooms, corridors, warehouse storage areas, and other spaces <= 300 sqft that are enclosed by floor-to-ceiling height partitions. Reference section language C405.2.1.2 for control function in warehouses and section C405.2.1.3 for open plan office spaces.	☐ Complies ☐ Does Not Comply ☐ Not Observable ☐ Not Applicable	**Location on plans/spec:** E1.1, E1.2, E3.2, E3.3, E3.4
C405.2.1.2 [EL19]^{1}	Occupancy sensors control function in warehouses: In warehouses, the lighting in aisleways and open areas is controlled with occupant sensors that automatically reduce lighting power by 50% or more within 20 minutes of when the areas are unoccupied. The occupant sensors control lighting in each aisleway independently and do not control lighting beyond the aisleway being controlled by the sensor. Lights not turned off by occupant sensors is done so by time-switch.	☐ Complies ☐ Does Not Comply ☐ Not Observable ☐ Not Applicable	**Exception:** Requirement does not apply.

Section # & Req.ID	Rough-In Electrical Inspection	Complies?	Comments/Assumptions
C405.2.1.3 [EL20]^{1}	Occupant sensor control function in open plan office areas: Occupant sensor controls in open office spaces >= 300 sq.ft. have controls 1) configured so that general lighting can be controlled separately in control zones with floor areas <= 600 sq.ft. within the space, 2) general lighting in each zone permitted to turn on upon occupancy in control zone, 3) automatically turn off general lighting in all control zones within 20 minutes after all occupants have left the space, 4) are configured so that general lighting power in each control zone is reduced by >= 80% of the full zone general lighting power within 20 minutes of all occupants leaving that control zone.	☐ Complies ☐ Does Not Comply ☐ Not Observable ☐ Not Applicable	**Exception:** Requirement does not apply.
C405.2.2, C405.2.2.1 [EL21]^{1}	Each area not served by occupancy sensors (per C405.2.1.1) have time-switch controls and functions detailed in sections C405.2.2.1.	☐ Complies ☐ Does Not Comply ☐ Not Observable ☐ Not Applicable	**Location on plans/spec:** E1.1, E1.2, E3.2, E3.3, E3.4
C405.2.4, C405.2.4.1, C405.2.4.2 [EL23]^{1}	Daylight zones provided with individual controls that control the lights independent of general area lighting. See code section C405.2.3 Daylight-responsive controls for applicable spaces, C405.2.3.1 Daylight responsive control function and section C405.2.3.2 Sidelit zone.	☐ Complies ☐ Does Not Comply ☐ Not Observable ☐ Not Applicable	**Location on plans/spec:** E1.1, E1.2, E3.2, E3.3, E3.4
C405.2.5 [EL27]^{1}	Additional interior lighting power allowed for special functions per the approved lighting plans and is automatically controlled and separated from general lighting.	☐ Complies ☐ Does Not Comply ☐ Not Observable ☐ Not Applicable	**Location on plans/spec:** E1.1, E1.2, E3.2, E3.3, E3.4

Additional Comments/Assumptions:

1	High Impact (Tier 1)	2	Medium Impact (Tier 2)	3	Low Impact (Tier 3)

Final Inspection

Section # & Req.ID	Final Inspection	Complies?	Comments/Assumptions
C303.3, C408.2.5.2 [FI17]^{3}	Furnished O&M instructions for systems and equipment to the building owner or designated representative.	☐ Complies ☐ Does Not Comply ☐ Not Observable ☐ Not Applicable	
C405.5.1 [FI19]^{3}	Exterior lighting power is consistent with what is shown on the approved lighting plans, demonstrating proposed watts are less than or equal to allowed watts.	☐ Complies ☐ Does Not Comply ☐ Not Observable ☐ Not Applicable	*See the Exterior Lighting fixture schedule for values*
C408.1.1 [FI57]^{3}	Building operations and maintenance documents will be provided to the owner. 'Documents will cover manufacturers' information, specifications, programming procedures and means of illustrating to owner how building, equipment and systems are intended to be installed, maintained, and operated.	☐ Complies ☐ Does Not Comply ☐ Not Observable ☐ Not Applicable	
C408.2.5 [FI16]^{3}	Furnished as-built drawings for electric power systems within 90 days of system acceptance.	☐ Complies ☐ Does Not Comply ☐ Not Observable ☐ Not Applicable	
C408.3 [FI33]^{3}	Lighting systems have been tested to ensure proper calibration, adjustment, programming, and operation.	☐ Complies ☐ Does Not Comply ☐ Not Observable ☐ Not Applicable	**Location on plans/spec:** E1.1, E1.2, E3.2, E3.3, E3.4

Additional Comments/Assumptions:

1	High Impact (Tier 1)	2	Medium Impact (Tier 2)	3	Low Impact (Tier 3)

HTG architects
www.htg-architects.com
Minneapolis Bismarck
1010 Mainstreet, Suite 100
Hopkins, MN 55343
Tel: 952.278.8880

PROJECT

MAYO EMPLOYEES FEDERAL CREDIT UNION

NEW BUILDING
605 WEST AVE S.
LA CROSSE, WI

ISSUED SET 2026-03-27
REVISIONS
DATE NO

I hereby certify that this plan, specification or report was prepared by me or under my direct supervision and that I am a duly Licensed Professional Engineer under the laws of the state of Minnesota

Matthew W. Fults

40887 2026-03-27
Reg No. Date

emanuelson-podas
consulting engineers
Emanuelson-Podas, Inc.
7705 Bush Lake Road
Edina, MN 55439
(952) 930-0050 | www.epinc.com

ENERGY COMPLIANCE FORMS

Drawn By: FSB Checked By: KDM

E3.3

3392.0002

COPYRIGHT © HTG ARCHITECTS

Autodesk Docs://3392.0002/Mayo EFCU - Lacrosse WI/Mayo EFCU_Lacrosse WI_MEP_2025.rvt
3/26/2026 7:16:45 PM

LIGHT FIXTURE SCHEDULE

GENERAL NOTES:

A. CATALOG NUMBER INDICATES BASIC FIXTURE TYPE REQUIRED FOR THIS PROJECT AND MAY NOT BE COMPLETE. VERIFY WITH MANUFACTURER TO INCLUDE ALL OPTIONS AND ACCESSORIES REQUIRED FOR THIS INSTALLATION.
B. ELECTRICAL CONTRACTOR SHALL BE RESPONSIBLE FOR VERIFYING FIXTURE LOCATIONS, MOUNTING, AND REQUIREMENTS WITH ARCHITECTURAL PLANS, SECTIONS, ELEVATIONS, AND REFLECTED CEILING PLANS PRIOR TO ORDERING FIXTURES.
C. ALL FINISHES SHALL BE VERIFIED WITH THE ARCHITECT PRIOR TO ORDERING FIXTURES. FINISH SELECTION TO BE FROM MANUFACTURERS STANDARD FINISHES UNLESS NOTED OTHERWISE. FINISHES SHALL BE VERIFIED AT THE TIME OF SHOP DRAWING SUBMITTAL.
D. SEE SPECIFICATIONS FOR EXTRA MATERIALS REQUIRED FOR LIGHT FIXTURES.
E. COORDINATE THE COMPATIBILITY OF DIMMING WITH SPECIFIED CONTROLS. DIMMING SHALL BE ACCOMPLISHED WITH NO VISIBLE FLICKER.
F. NO SUBSTITUTIONS SHALL BE ACCEPTED WITHOUT PRIOR APPROVAL BY THE ENGINEER.
G. EQUALS ARE ACCEPTABLE AND WILL BE REVIEWED AS PART OF THE SHOP DRAWING PROCESS.

FIXTURE NOTES:

1. MOUNT FIXTURE 10'-0" A.F.F. UNLESS NOTED OTHERWISE.
2. COORDINATE MOUNTING HEIGHT AND LOCATION WITH ARCHITECT AND OWNER PRIOR TO ROUGH-IN AND FINAL INSTALL.
3. ROUTE FIXTURE THROUGH EMERGENCY INVERTER FOR EMERGENCY OPERATION.

TYPE	DESCRIPTION	VOLT	LAMPS TYPE	LAMPS QTY / FIXT.	VA / FIXT.	MANUFACTURER	CATALOG NUMBER	EQUAL MANUFACTURERS	NOTES	TYPE
A1	2X2 RECESSED FLAT PANEL LED, 2000 NOMINAL LUMENS, 35K, DIMMABLE TO 1%, ACRYLIC LENS.	UNIV	LED 3500K	N/A	16	LITHONIA	CPX-2X2-2000LM-80CRI-35K-SWL-MINI10-MVOLT	COLUMBIA #LTSE, METALUX #24RDI, DAYBRITE #CFS24		A1
A1X	SAME AS A1 WITH BATTERY DRIVER.	UNIV	LED 3500K	N/A	16	LITHONIA				A1X
B1	SUSPENDED LINEAR INDIRECT/DIRECT LIGHT FIXTURE. 400 LUMENS UP/400 LUMENS DOWN. TUNABLE WHITE 90CRI. PROVIDE ADJUSTABLE AIRCRAFT CABLE AND MOUNT BOTTOM OF FIXTURE	UNIV	LED 3500K	N/A	48	AXIS LIGHTING	TB4DILED-400-400-90-35-TW2750-SO-SO-8-W-UNV-DPTW-1	FOCAL POINT, ALW, AXIS		B1
B1X	SAME AS B1 WITH BATTERY DRIVER.	UNIV	LED 3500K	N/A	48	AXIS LIGHTING				B1X
C1	6" LED DOWNLIGHT. DIFFUSE REFLECTOR. 1500 NOMINAL LUMENS. INDIVIDUAL DIODES SHALL NOT BE VISIBLE. DAMP LOCATION RATED. FIXTURE SHALL HAVE NO GAP BETWEEN REFLECTOR AND LED ENGINE.	UNIV	LED 3500K	N/A	15	GOTHAM	IVO6-D-15LM-35K-80CRI-MD-MIN10-MVOLT	PRESCOLITE #LFR-6RD, HALO #HC6, LIGHTOLIER #C5RDL		C1
C1X	SAME AS C1 WITH BATTERY DRIVER.	UNIV	LED 3500K	N/A	15	GOTHAM				C1X
C2	4" LED DOWNLIGHT. MEDIUM DISTRIBUTION, PARABLOCI TRIM, CLEAR ANODIZED, SEMI SPECULAR, 1486 NOMINAL DELIVERED LUMENS. 0-10V DIMMING DRIVER. IC RATED.	UNIV	LED 3500K	N/A	15	GOTHAM	IVO4-D-15LM-35K-80CRI-MD-MIN10-MVOLT-P-AR-LSS	PRESCOLITE #LFR-6RD, HALO #HC6, LIGHTOLIER #C5RDL		C2
D1	6" LED DOWNLIGHT. DIFFUSE REFLECTOR. 3000 NOMINAL DELIVERED LUMENS. INDIVIDUAL DIODES SHALL NOT BE VISIBLE. DAMP LOCATION RATED. FIXTURE SHALL HAVE NO GAP BETWEEN REFLECTOR AND LED ENGINE.	UNIV	LED 3500K	N/A	26	GOTHAM	IVO6-D-30LM-35K-80CRI-WD-MIN10-MVOLT-WL-P	LITHONIA, HALO COMMERCIAL, MAXILUME		D1
E1	EXIT SIGN, BACK MOUNTED, SINGLE FACE, HIGH IMPACT THERMOPLASTIC, RED LETTERING, WHITE FINISH. SEE PLANS FOR ARROW REQUIREMENTS.	UNIV	LED	N/A	2	LITHONIA	LQM-S-W-RG-MVOLT	DUALLITE #LE, LITHONIA #LRP, LIGHTALARMS #SLEDN		E1
F1	27" DECORATIVE PENDANT FIXTURE. DIRECT AND INDERECT LIGHT, EXTRUDED ALUMINIUM HOUISING. EXTRUDED POLYCARBONATE DIFFUSER. IP20	UNIV	LED 3000K	N/A	25	PANZERI	ZERO SQUARE	NONE ALLOWED	2	F1
G1	4' LED STRIP LIGHT WITH DIFFUSED LENS. 4391 NOMINAL DELIVERED LUMENS. PROVIDE HARDWARE FOR CHAIN MOUNTING.	UNIV	LED 3500K	N/A	35	LITHONIA	BLWP--40L-ADP-MVOLT-GZ10-LP835	DAYBRITE #FSS, LITHONIA #ZL1N, METALUXRSNLED	1	G1
G1X	SAME AS G1 WITH BATTERY DRIVER	UNIV	LED 3500K	N/A	35	LITHONIA			1	G1X
J1	LED RGBW TAPELIGHT. PROVIDE LENGTHS AS NOTED. 232 LUMENS PER FOOT. PROVIDE SURFACE MOUNT ALUMINUM CHANNEL AND DIFFUSED LENS. PROVIDE 0-10V POWER SUPPLY. PROVIDE ALL REQUIRED ACCESSORIES FOR PROPER MOUNTING AND INSTALLATION. IP68 RATED.PROVIDE WITH DMX DRIVERS AND CONTROLS.	UNIV	LED 3500K	N/A	6	ACCLAIM	FLEXSE-35 W/ FLX477 CHANNEL AND FLXLP FL4 LENS	Q-TRAN, KELVIX, ACOLYTE		J1
K1	EXTERIOR LED WALL SCONCE. ALUMINUM CONSTRUCTION. WET LOCATION LISTED. IP66 RATED.	UNIV	LED	N/A	500	SUPPLIED BY OWNER - INSTALLED BY EC				K1
K2	ATM SIGN FURNISHED BY OWNER, INSTALLED BY EC.	120	LED	N/A	500	SUPPLIED BY OWNER - INSTALLED BY EC				K2
N1X	LED WALL PACK TYPE III DISTRIBUTION 2974 NOMINAL DELIVERED LUMENS. BLACK IN COLOR. PROVIDE WITH INTEGRAL HI/LOW OCCUPANCY SENSOR FOR 50% LEVEL CONTROL WITH BATTERY DRIVER.	UNIV	LED 3000K	N/A	21	LITHONIA	DSXW1LED-P3-30K-80CRI-T3M-MVOLT-SRM-PIR-E10WH-DBLXD	HE WILLIAMS, ,GARDCO, MCGRAW EDISON GWC		N1X
P1	SINGLE-HEAD. TYPE IV (P28) DISTRIBUTION LED POLE MOUNTED FIXTURE W/ HOUSESIDE SHIELD. 25' SQUARE STEEL POLE. BLACK IN COLOR. HEAD AND POLE SHALL HAVE MATCHING FINISH. 14647D & 5343 NOMINAL DELIVERED LUMENS. PROVIDE CONCRETE BASE PER DETAIL. PROVIDE BASE COVER. PROVIDE WITH INTEGRAL HI/LOW OCCUPANCY SENSOR FOR 50% LEVEL CONTROL.	UNIV	LED 3000K	N/A	170	LITHONIA	DSX0-LED-P7-30K-80CRI-BLC4-MVOLT-SPA-PIR-DBLXD POLE: SSS-25-4G-DM28AS-VD-DBLXD	BEACON, MCGRAW EDISON, GARDCO		P1

LIGHTING CONTROL SCHEDULE

RELAY #	PANEL / CKT NO.	VOLTAGE	CONTROL	DESCRIPTION	NOTES
1	A/8	120	EXTERIOR PHOTOSENSOR	PARKING LOT - SECURITY LIGHTING "Ea"	1,3
2	A/9	120	EXTERIOR PHOTOSENSOR	PARKING LOT "Eb"	1,2,3
3	A/4	120	EXTERIOR PHOTOSENSOR	DRIVE THRU CANOPY SECURITY LIGHTING "Ec"	1,3
4	A/4	120	EXTERIOR PHOTOSENSOR/SCHEDULE	DRIVE THRU CANOPY LIGHTING "Ed"	1,2,3
5	A/5	120	EXTERIOR PHOTOSENSOR/SCHEDULE	EXTERIOR CANOPY LIGHTING "Ee"	1,2,3
6	A/5	120	EXTERIOR PHOTOSENSOR/SCHEDULE	EXTERIOR CANOPY SECURITY LIGHTING "Ef"	1,2,3
7	A/5	120	EXTERIOR PHOTOSENSOR/SCHEDULE	EXTERIOR ENTRANCE COLOR TAPE LIGHT	2
8	A/1	120	EXTERIOR PHOTOSENSOR/SCHEDULE	FLAG LIGHTS	1,3
9	A/6	120	EXTERIOR PHOTOSENSOR/SCHEDULE	MONUMENT SIGN	1,3
10	A/2	120	EXTERIOR PHOTOSENSOR/SCHEDULE	EXTERIOR BUILDING SIGNAGE	1,2,3
11	A/9	120	EXTERIOR PHOTOSENSOR/SCHEDULE	EXTERIOR BUILDING SIGNAGE	1,2,3
12	M/1	120	SCHEDULE	PPH1	2
13					
14					
15					
16					
17					
18					
19					
20					
21					
22					
23					
24					

NOTES:
1. PROGRAM CONTROL PANEL TO TURN FIXTURES ON AT DUSK VIA PHOTOCELL.
2. PROGRAM TIMECLOCK TO TURN FIXTURES ON THEN OFF AT PRE-SET SCHEDULE. COORDINATE W/OWNER.
3. PROGRAM CONTROL PANEL TO TURN FIXTURES OFF AT DAWN VIA PHOTOCELL.
4. PROGRAM TIMECLOCK TO TURN FIXTURES OFF AT PRE-SET SCHEDULE. COORDINATE W/OWNER.
5. MESSAGE CENTER CIRCUIT(S) SHALL NOT BE CONTROLLED WITH RELAY.
6. RELAY TO BE CONTROLLED WITH LIGHTING CONTROL STATION.

LIGHTING CONTROL COMMISSIONING

PROVIDE FUNCTIONAL TESTING AND DOCUMENTATION FOR ALL LIGHTING CONTROL DEVICES AND CONTROL SYSTEMS TO MEET THE REQUIREMENTS OF 2024 MN ENERGY CODE. LIGHTING CONTROLS SUPPLIER SHALL BE RESPONSIBLE TO PROVIDE A REPRESENTATIVE WHO WILL PERFORM THIS SCOPE OF SERVICE.ALL TIMING SHALL MEET CODE MINIMUM REQUIREMENTS AND BE ADJUSTED AS REQUESTED BY OWNER.UPON COMPLETION PROVIDE DOCUMENTATION TO AUTHORITY HAVING JURISDICTION AS REQUESTED.

MOTOR SCHEDULE

ABBREVIATIONS:
MAG - MAGNETIC, HOA - HAND/OFF/AUTOMATIC, SS - START/STOP, TT - THERMAL TOGGLE, PB - PUSHBUTTON, START - STARTER, EMS - ENERGY MANAGEMENT SYSTEM, BAS - BUILDING AUTOMATION SYSTEM, F.A. - FIRE ALARM, DSD - DUCT SMOKE DETECTOR, MFR - MANUFACTURER, OATS - OUTSIDE AIR TEMPERATURE SENSOR

GENERAL NOTES:

A. CONFIRM ALL CONNECTIONS TO MECHANICAL EQUIPMENT WITH SHOP DRAWINGS PRIOR TO ROUGH-IN.
B. DISCONNECTS SHALL NOT BE MOUNTED DIRECTLY TO MECHANICAL EQUIPMENT.
C. ALL FEEDERS TO MECHANICAL EQUIPMENT SHALL BE COPPER.

NOTES:

1. PROVIDE SINGLE POLE, 30A CONTACTOR W/24V CONTROL COIL FOR CONTROL VIA DIV 23 CONTROLLER.
2. SPLIT SYSTEM CIRCUIT SHALL BE ROUTED FROM THE PANEL/CIRCUIT BREAKER THROUGH THE OUTDOOR UNIT (CU#3) TO THE INDOOR UNIT (AC#1).
3. PROVIDE TOGGLE SWITCH ABOVE ACCESSIBLE CEILING SPACE FOR DISCONNECT AND LABEL.
4. PROVIDE 20A RELAY W/24V COIL FOR CONTROL VIA DIV 23 T-STAT. LINE-VOLTAGE WIRING AND TERMINATIONS PROVIDED BY DIVISION 26. LOW-VOLTAGE WIRING AND TERMINATIONS PROVIDED BY DIV 23.
5. PROVIDE RELAY FOR FAN SHUTDOWN UPON ACTIVATION OF DUCT SMOKE DETECTOR. MOUNT DETECTOR IN RETURN DUCTWORK. PROVIDE REMOTE TEST SWITCH. VERIFY LOCATION WITH AHJ.
6. PROVIDE TOGGLE SWITCH AT UNIT FOR DISCONNECT.
7. ROUTE POWER THROUGH SPEED CONTROLLER SWITCH BY DIV 23. MOUNT IN CEILING SPACE. FOR BALANCING PURPOSES ONLY.
8. ROUTE POWER THROUGH LIGHTING CONTROL PANEL RELAY. PROGRAM TIME OF DAY TO OWNERS REQUIREMENTS.
9. PROVIDE NEMA 3R DISCONNECT ADJACENT THE UNIT. DO NOT INSTALL DIRECTLY ON THE CONDENSING UNIT.
10. PROVIDE 3-POLE, 30A CONTACTOR W/208V CONTROL COIL FOR CONTROL VIA DIVISION 23 PROGRAMMABLE LINE-VOLTAGE T-STAT FOR CONTROL OF DH-1.
11. FAN SHALL BE CONTROLLED WITH LIGHTING IN ROOM. PROVIDE ADDITIONAL POWER PACK OR INTERFACE TO LIGHTING CONTROLS AS REQUIRED. FAN SHALL COME ON WITH EITHER SWITCHLEG WHERE APPLICABLE. FAN SHALL OPERATE FOR 15 MINUTES (ADJ.) AFTER LIGHTS ARE TURNED OFF.

MOTOR NO.	LOCATION ROOM NAME	LOCATION ROOM NO	KW	UNIT FLA	UNIT HP	UNIT MCA	VOLTS	PHASE	STARTER TYPE	STARTER SIZE	STARTER LOC	STARTER BY	DISC FU/SW	DISC BY	CONTROL DEVICE DEVICE	CONTROL DEVICE FURNISHED BY	CONTROL DEVICE WIRED BY	INTERLOCK DEVICE	INTERLOCK FURNISHED BY	INTERLOCK WIRED BY	PANEL	CIRCUIT	BREAKER	FEEDER PH-G-C	NOTES	MOTOR NO.
BOILER - GAS SCHEDULE																										
Bi#1			0.48	4	- -	5	120	1	- -	- -	- -	- -	TOGGLE	DIV 26	CONTROLLER	DIV 23	DIV 23	- -	- -	- -	M	4	15	12-12-1/2"	6	Bi#1
COIL - ELECTRIC SCHEDULE																										
DHi#1			4	11.1		13.9	208	3	- -	- -	- -	- -	INTEGRAL	MFR	T-STAT	DIV 23	DIV 26	- -	- -	- -	M	32,34,36	25	12-12-1/2"	10	DHi#1
CONDENSING UNIT - AIR COOLED SCHEDULE																										
CUi#1	ROOF	- -	3.5	16.7		20.9	208	1	- -	- -	- -	- -	WP NF/60	DIV 26	T-STAT (VIA SUi#1)	DIV 23	DIV 23	- -	- -	- -	M	20,22	35	8-10-3/4"	9	CUi#1
CUi#2	ROOF	- -	3.5	16.7		15.5	208	1	- -	- -	- -	- -	WP NF/60	DIV 26	T-STAT (VIA SUi#2)	DIV 23	DIV 23	- -	- -	- -	M	15,17	35	8-10-3/4"	9	CUi#2
CUi#3	ROOF	- -	2.6	12.8		16	208	1	- -	- -	- -	- -	WP NF/30	DIV 26	T-STAT (VIA AC-1)	DIV 23	DIV 23	AC-1	DIV 26	DIV 26	M	27,29	30	10-10-3/4"	2, 9	CUi#3
FAN SCHEDULE																										
EF1	ROOF	- -	0.312	1.5	1/6	1.9	208	1	- -	- -	- -	- -	INTEGRAL	MFR	OCCUPANCY	DIV 26	DIV 26	- -	- -	- -	M	10,12	15	12-12-1/2"	11	EF1
FURNACE - GAS FIRED SCHEDULE																										
SUi#1			1.2	10.1		10.9	120	1	- -	- -	- -	- -	TOGGLE	DIV 26	T-STAT	DIV 23	DIV 23	DSD	DIV 26	DIV 26	M	7	25	12-12-1/2"	5, 6	SUi#1
SUi#2			0.76	6.3		7	120	1	- -	- -	- -	- -	TOGGLE	DIV 26	T-STAT	DIV 23	DIV 23	DSD	DIV 26	DIV 26	M	6	20	12-12-1/2"	5, 6	SUi#2
PLUMBING PUMP SCHEDULE																										
PPi#1			0.09	0.74		0.9	120	1	- -	- -	- -	- -	TOGGLE	DIV 26	LCP	DIV 26	DIV 26	- -	- -	- -	M	1	15	12-12-1/2"	8	PPi#1
PUMP SCHEDULE																										
Pi#1			0.252	2.1	1/6	2.6	120	1	RELAY	- -	UNIT	DIV 26	TOGGLE	DIV 26	CONTROLLER	DIV 23	DIV 23	- -	- -	- -	M	2	20	12-12-1/2"	1	Pi#1
Pi#2			0.168	1.4	1/12	1.75	120	1	RELAY	- -	UNIT	DIV 26	TOGGLE	DIV 26	CONTROLLER	DIV 23	DIV 23	- -	- -	- -	M	3	20	12-12-1/2"	1	Pi#2
Pi#3			0.168	1.4	1/12	1.75	120	1	RELAY	- -	UNIT	DIV 26	TOGGLE	DIV 26	CONTROLLER	DIV 23	DIV 23	- -	- -	- -	M	5	20	12-12-1/2"	1	Pi#3
RADIANT PANEL SCHEDULE - ELECTRIC																										
EHR2.1			0.75	3.6		4.5	208	1	- -	- -	- -	- -	TOGGLE	DIV 26	T-STAT	DIV 23	DIV 26	- -	- -	- -	M	14,16	20	12-12-1/2"	3, 4	EHR2.1
SPLIT SYSTEM COOLING INDOOR UNIT SCHEDULE																										
ACi#1			0.03	0.1		16	208	1	- -	- -	- -	- -	INTEGRAL	MFR	T-STAT	DIV 23	DIV 23	CUi#3	DIV 26	DIV 26	M	27,29	20	12-12-1/2"	2	ACi#1
UNIT HEATER SCHEDULE - ELECTRIC																										
EHi#1			2	9.6	- -	0	208	1	- -	- -	- -	- -	INTEGRAL	MFR	T-STAT	MFR	MFR	OATS	DIV 23	DIV 26	M	19,21	20	12-12-1/2"		EHi#1
WATER HEATER - ELECTRIC SCHEDULE																										
WHi#1			4	19.2		24	208	1	- -	- -	- -	- -	NF/30	DIV 26	- -	- -	- -	- -	- -	- -	M	23,25	25	10-10-3/4"		WHi#1

HTG architects

www.htg-architects.com
Minneapolis Bismarck

1010 Mainstreet, Suite 100
Hopkins, MN 55343
Tel: 952.278.8880

PROJECT

MAYO EMPLOYEES FEDERAL CREDIT UNION

NEW BUILDING

605 WEST AVE S.
LA CROSSE, WI

ISSUED SET	2026-03-27
REVISIONS	
DATE	NO

I hereby certify that this plan, specification or report was prepared by me or under my direct supervision and that I am a duly Licensed Professional Engineer under the laws of the state of Minnesota

Matthew W. Fults

40887 2026-03-27
Reg No. Date

emanuelson-podas consulting engineers
Emanuelson-Podas, Inc.
7705 Bush Lake Road
Edina, MN 55439
(952) 930-0050 | www.epinc.com

ELECTRICAL SCHEDULES

Drawn By: FSB Checked By: KDM

E4.1

3392.0002

COPYRIGHT © HTG ARCHITECTS

Autodesk Docs://3392.0002 Mayo EFCU - Lacrosse WI/Mayo EFCU_Lacrosse WI_MEP_2025.rvt
3/26/2026 7:16:45 PM

PANEL: M

LOCATION: UTILITY ROOM 114 | **VOLTS:** 120/208 Wye | **MOUNTING:** SURFACE
BUS RATING: 400 A | **PHASES:** 3 | **FED FROM:** SEE RISER
MAIN BREAKER: 400 A | **WIRES:** 4 | **ENCLOSURE:** Type 1
AVAILABLE FAULT CURRENT: 35,000 A

NOTES:

CKT	CIRCUIT DESCRIPTION	CB	P	A		B		C		P	CB	CIRCUIT DESCRIPTION	CKT
1	PP#1	15	1	90	252					1	20	P#1	2
3	P#2	20	1			168	480			1	15	B#1	4
5	P#3	20	1					168	760	1	20	SU#2	6
7	SU#1	20	1	1200	--					1	--	SPACE ONLY	8
9							312			2	15	EF1	10
11									312	--	--	--	12
13					375					2	20	EHI#2.1	14
15	CU#2	35	2			1750	375			--	--	--	16
17	--	--	--					1750					18
19	EHI#1	20	2	1000	1750					2	35	CU#1	20
21	--	--	--			1000	1750			--	--	--	22
23	WH#1	25	2					4000					24
25	--	--	--	4000	3998					3	200	PANEL A	26
27	CU#3	30	2			2615	4009			--	--	--	28
29	--	--	--					2615	3005	--	--	--	30
31	PANEL B	200	3	8680	1333					3	25	DH#1	32
33	--	--	--			8680	1333			--	--	--	34
35	--	--	--					8710	1333	--	--	--	36
37	SPARE	20	1	0	0					1	20	SPARE	38
39	SPARE	20	1			0	0			1	20	SPARE	40
41	SPARE	20	1					0	0	1	20	SPARE	42
				TOTAL LOAD:		22678 VA		22465 VA		22652 VA			
				TOTAL AMPS:		189 A		187 A		189 A			

LOAD CLASSIFICATION	CONNECTED LOAD	DEMAND FACTOR	ESTIMATED DEMAND	PANEL TOTALS	
Appliance	2000 VA	70.00%	1400 VA		
Electric Heat	14750 VA	100.00%	14750 VA	**CONNECTED LOAD:**	67795 VA
Lighting	6412 VA	125.00%	8014 VA	**ESTIMATED DEMAND:**	67136 VA
Motor	18372 VA	100.00%	18372 VA	**CONNECTED CURRENT:**	188 A
Other	750 VA	100.00%	750 VA	**EMD CURRENT:**	186 A
Power	10200 VA	100.00%	10200 VA		
Receptacle	13320 VA	87.54%	11660 VA		
Spare	2000 VA	100.00%	2000 VA		

PANEL: A

LOCATION: UTILITY ROOM 114 | **VOLTS:** 120/208 Wye | **MOUNTING:** SURFACE
BUS RATING: 100 A | **PHASES:** 3 | **FED FROM:** SEE RISER
MAIN BREAKER: MLO | **WIRES:** 4 | **ENCLOSURE:** Type 1
AVAILABLE FAULT CURRENT: 22,000 A

NOTES:

CKT	CIRCUIT DESCRIPTION	CB	P	A		B		C		P	CB	CIRCUIT DESCRIPTION	CKT
1	FLAG UPLIGHTS	20	1	200	800					1	20	EXTERIOR SIGN	2
3	LIGHTS CLERESTORY	20	1			480	752			1	20	LIGHTS INTERIOR	4
5	LIGHTS INTERIOR	20	1					610	1200	1	20	MOMUMENT SIGN	6
7	COVE LIGHITNG CLERESTORY	20	1	978	1020					1	20	PARKING LOT LIGHTS	8
9	EXTERIOR SIGN	20	1			800	1000			1	20	DRIVE UP SIGNAGE	10
11	MONUMENT SIGN	20	1					1200	--	1	--	SPACE ONLY	12
13	FUTURE ATM	30	2	1000	--					1	--	SPACE ONLY	14
15	--	--	--			1000	--			1	--	SPACE ONLY	16
17	SPACE ONLY	--	1					--	--	1	--	SPACE ONLY	18
19	SPACE ONLY	--	1	--	--					1	--	SPACE ONLY	20
21	SPACE ONLY	--	1			--	--			1	--	SPACE ONLY	22
23	SPACE ONLY	--	1					--	--	1	--	SPACE ONLY	24
25	SPACE ONLY	--	1	--	--					1	--	SPACE ONLY	26
27	SPACE ONLY	--	1			--	--			1	--	SPACE ONLY	28
29	SPACE ONLY	--	1					--	--	1	--	SPACE ONLY	30
31	SPACE ONLY	--	1	--	--					1	--	SPACE ONLY	32
33	SPACE ONLY	--	1			--	--			1	--	SPACE ONLY	34
35	SPARE	20	1					0	0	1	20	SPARE	36
37	SPARE	20	1	0	0					1	20	SPARE	38
39	SPARE	20	1			0	0			1	20	SPARE	40
41	SPARE	20	1					0	0	1	20	SPARE	42
				TOTAL LOAD:		3998 VA		4009 VA		3005 VA			
				TOTAL AMPS:		35 A		35 A		25 A			

LOAD CLASSIFICATION	CONNECTED LOAD	DEMAND FACTOR	ESTIMATED DEMAND	PANEL TOTALS	
Lighting	6412 VA	125.00%	8014 VA		
Power	2600 VA	100.00%	2600 VA	**CONNECTED LOAD:**	11008 VA
Spare	2000 VA	100.00%	2000 VA	**ESTIMATED DEMAND:**	12610 VA
				CONNECTED CURRENT:	31 A
				EMD CURRENT:	35 A

PANEL: B

LOCATION: UTILITY ROOM 114 | **VOLTS:** 120/208 Wye | **MOUNTING:** SURFACE
BUS RATING: 150 A | **PHASES:** 3 | **FED FROM:** SEE RISER
MAIN BREAKER: MLO | **WIRES:** 4 | **ENCLOSURE:** Type 1
AVAILABLE FAULT CURRENT: 22,000 A

NOTES:
1. PROVIDE 5mA GFCI CIRCUIT BREAKER.

CKT	CIRCUIT DESCRIPTION	CB	P	A		B		C		P	CB	CIRCUIT DESCRIPTION	CKT
1	RECEPT, CLERESTORY	20	1	180	360					1	20	RECEPT, CASH WORK ROOM / IT 106	2
3	RECEPT, TOILET 115	20	1			280	440			1	20	POWER - DRIVE LANE JUNCTION BOX	4
5	EWC (NOTE 1 - 5mA GFCI)	20	1					360	500	1	20	BLOWER UNIT	6
7	COIN COUNTER	20	1	500	640					1	20	RECEPTS, WELLNESS, EMP TOILET	8
9	WATER SOFTENER	20	1			600	720			1	20	POWER WINDOW SHADES - CLERESTORY	10
11	RECEPTS, TELLER 104	20	1					610	610	1	20	RECEPTS, VIDEO CONF. 109	12
13	RECEPTS, OFFICE 110	20	1	1080	1080					1	20	RECEPTS, OFFICE 111, VEST 101	14
15	RECEPTS, OFFICE 112	20	1			900	900			1	20	RECEPTS, OFFICE 113	16
17	RECEPTS, WAITING AREA	20	1					790	1000	1	20	DOOR OPERATORS	18
19	RECEPT, OWNER SAFE	20	1	180	360					1	20	RECEPTS, VIDEO CONF. 109	20
21	RECEPT, UTILITY ROOM 114	20	1			180	360			1	20	RECEPTS, VIDEO SURVEILLANCE	22
23	UPS	30	1					180	360	1	20	RECEPTS, WORK / COPY 107	24
25	RECEPT, ELECTRICAL DRAWER	20	1	360	500					1	20	DRIVE UP CUSTOMER UNIT	26
27	RECEPT, MPOP	20	1			360	500			1	20	FIREPLACE, WAITING AREA 103	28
29	RECEPTS, LOUNGE 118	20	1					360	500	1	20	NITHGT DEPOSIT	30
31	RECEPTS, STORAGE 108, TELLER 104	20	1	720	720					1	20	RECEPTS, CASH WORK ROOM / IT 106	32
33	RECEPTS, TELLER 104	20	1			720	720			1	20	RECEPTS, DRIVER-UP TELLER 105	34
35	RECEPTS, TELLER 104	20	1					720	720	1	20	RECEPTS, LOUNGE, EMP ENTRANCE, EXTERIOR	36
37	RECEPT, WORK / COPY 107	20	1	1000	1000					1	20	DRIVE UP VIDEO UNIT	38
39	REFRIGERATOR, LOUNGE 118	20	1			1000	1000			1	20	ELECTRIC HEAT TAPE - ROOFDRAIN	40
41	TCR, TELLER 104	20	1					1000	1000	1	20	MICROWAVE, LOUNGE 118	42
				TOTAL LOAD:		8680 VA		8680 VA		8710 VA			
				TOTAL AMPS:		72 A		72 A		73 A			

LOAD CLASSIFICATION	CONNECTED LOAD	DEMAND FACTOR	ESTIMATED DEMAND	PANEL TOTALS	
Appliance	2000 VA	70.00%	1400 VA		
Motor	2400 VA	100.00%	2400 VA	**CONNECTED LOAD:**	26070 VA
Other	750 VA	100.00%	750 VA	**ESTIMATED DEMAND:**	23810 VA
Power	7600 VA	100.00%	7600 VA	**CONNECTED CURRENT:**	72 A
Receptacle	13320 VA	87.54%	11660 VA	**EMD CURRENT:**	66 A

Autodesk Docs://3392.0002 Mayo EFCU - Lacrosse WI/Mayo EFCU_Lacrosse WI_MEP_2025.rvt
3/26/2026 7:16:49 PM

HTG architects
www.htg-architects.com
Minneapolis Bismarck
1010 Mainstreet, Suite 100
Hopkins, MN 55343
Tel: 952.278.8880

PROJECT

MAYO EMPLOYEES FEDERAL CREDIT UNION

NEW BUILDING
605 WEST AVE S.
LA CROSSE, WI

ISSUED SET 2026-03-27
REVISIONS
DATE NO

I hereby certify that this plan, specification or report was prepared by me or under my direct supervision and that I am a duly Licensed Professional Engineer under the laws of the state of Minnesota

Matthew W. Fults

40887 2026-03-27
Reg No. Date

emanuelson-podas consulting engineers
Emanuelson-Podas, Inc.
7705 Bush Lake Road
Edina, MN 55439
(952) 930-0050 | www.epinc.com

ELECTRICAL SCHEDULES

Drawn By: FSB Checked By: KDM

E4.2

3392.0002

COPYRIGHT © HTG ARCHITECTS

TECHNOLOGY SYMBOLS

SYMBOL	DESCRIPTION
# OF DATA CABLES — #	DATA/TELEPHONE OUTLET - PROVIDE # OF TERMINATED CAT6 CABLES INDICATED BY "#" BACK TO PATCH PANELS IN IT ROOM. CABLES AND OUTLETS SHALL BE LABELED AT BOTH ENDS.
# OF DATA CABLES — # TV	TELEVISION OUTLET - PROVIDE # OF TERMINATED CAT6 CABLES INDICATED BY "#" BACK TO PATCH PANELS IN IT ROOM. CABLES AND OUTLETS SHALL BE LABELED AT BOTH ENDS.

LOW VOLTAGE RESPONSIBILITY SCHEDULE

ITEM	FURNISHED BY			INSTALLED BY			N/A	REMARKS
	OWNER	VENDOR	DIV 26	OWNER	VENDOR	DIV 26		
DATA CABLE CONDUITS / ROUGH-IN BOXES WITH PULLWIRE			o			o		
DATA ROOM HARDWARE (DATA RACKS, LADDER RACK, ETC)		o			o			
DATA CABLING AND JACKS			o			o		
DATA ROOM ELECTRONICS		o			o			

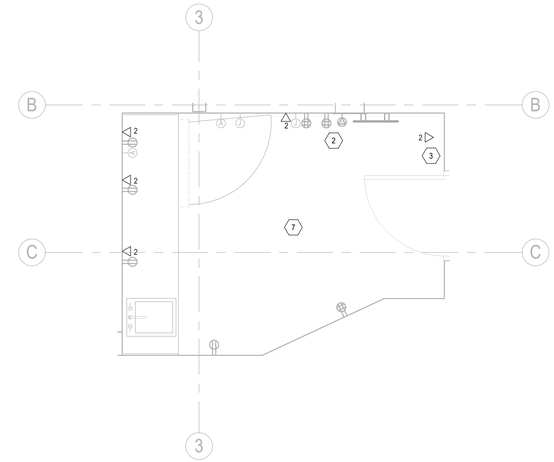

2 CASH WORK ROOM / IT - TECHNOLOGY
SCALE: 3/8" = 1'-0"

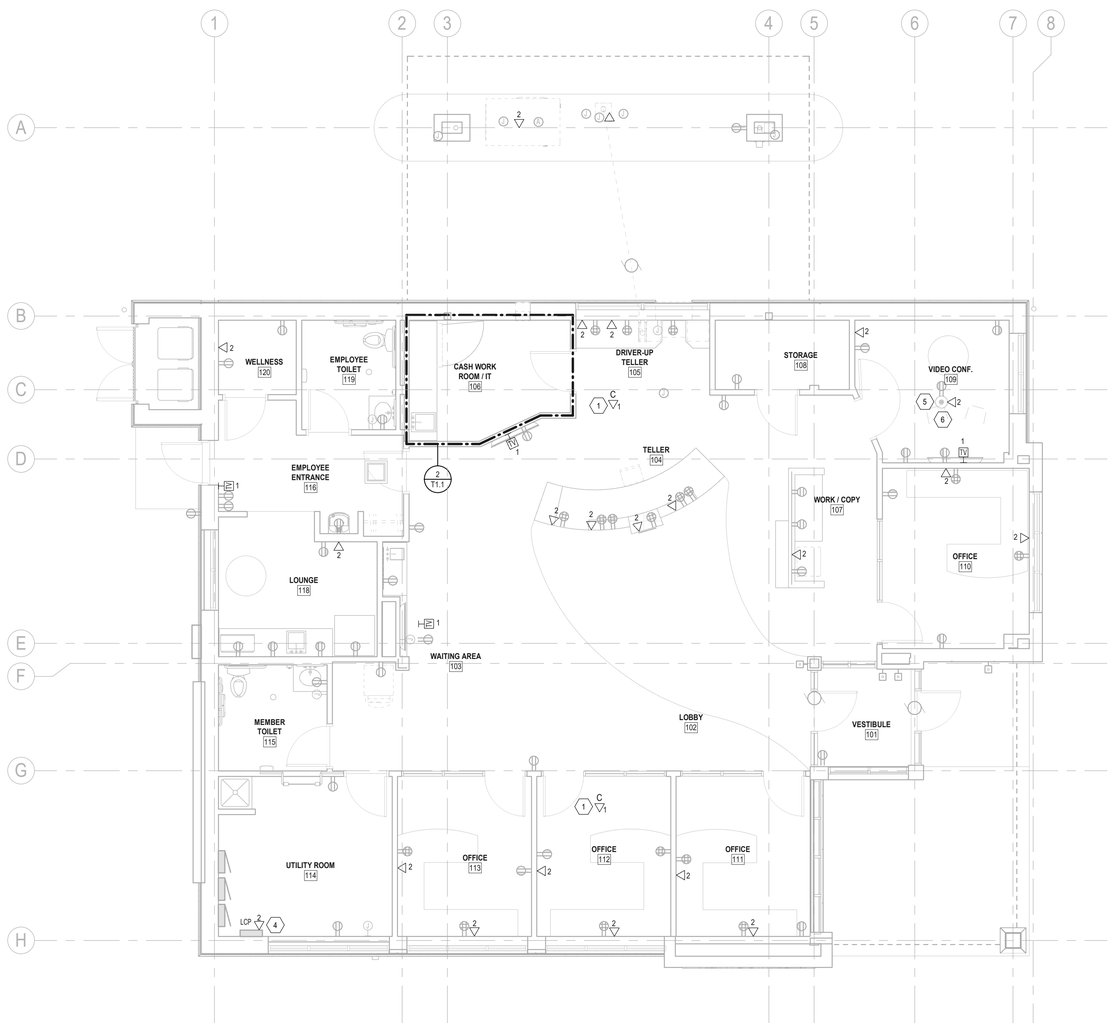

1 MAIN LEVEL PLAN - TECHNOLOGY
SCALE: 3/16" = 1'-0"

GENERAL NOTES:

A. PROVIDE BLANK COVERPLATES ON UNUSED ROUGH-INS.

B. PROVIDE CABLE DISTRIBUTION J-HOOKS AS NECESSARY TO ROUTE AND SUPPORT CABLES. ALL CABLES SHALL BE SUPPORTED FROM THE BUILDING STRUCTURE AND SHALL NOT LIE ON CEILING GRID. J-HOOKS SHALL BE SPACED NO MORE THAN FIVE FEET ON CENTER.

KEY NOTES:

1. PROVIDE CAT-6 CABLE FROM WIRELESS ACCESS POINT IN CEILING TO SERVER ROOM FOR WIFI. COORDINATE EXACT LOCATION AND REQUIREMENTS.
2. TWO-POST DATA RACK PROVIDED BY OWNERS VENDOR.
3. PROVIDE TELEPHONE LINES TO SECURITY/ALARM CONTROL PANELS. ASSUME (2) LINES ARE REQUIRED. COORDINATE EXACT REQUIREMENTS WITH ASSOCIATED VENDORS.
4. PROVIDE (1) TELEPHONE LINE TO LIGHTING CONTROL PANEL.
5. FLOOR BOX PROVIDED BY ELECTRICAL. PROVIDE JACKS AND TERMINATION PLATES AS NECESSARY.
6. PROVIDE HDMI CABLE BETWEEN FLOOR BOX AND TV TERMINATE ON BOTH ENDS.
7. COORDINATE EXACT ROOM LAYOUT WITH OWNER.

TELE/DATA SPECIFIC NOTES.

1. DATA RACK. SECURE TO FLOOR.
2. RACK MOUNTED MODULAR PATCH PANELS. PROVIDE QUANTITY FOR 125% OF DATA/TELEPHONE CABLES.
3. PROVIDE CAT6 CABLING TO DATA/TELEPHONE LOCATIONS AS INDICATED. TERMINATE DATA CABLES TO PATCH PANELS.
4. PROVIDE VERTICAL CABLE MANAGEMENT ALONG BOTH SIDES OF DATA RACK.
5. HORIZONTAL CABLE MANAGEMENT, LOCATED BELOW EACH MODULAR PATCH PANEL.

GENERAL NOTES:

A. PATCH PANELS SHOWN FOR DESCRIPTIVE PURPOSES ONLY. CONTRACTOR TO VERIFY ACTUAL NUMBER OF PATCH PANELS REQUIRED.

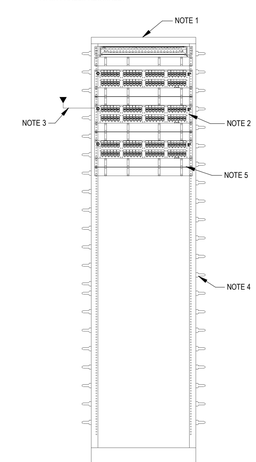

3 TECHNOLOGY RISER
NO SCALE

HTG architects
www.htg-architects.com
Minneapolis Bismarck
1010 Mainstreet, Suite 100
Hopkins, MN 55343
Tel: 952.278.8880

PROJECT

MAYO EMPLOYEES FEDERAL CREDIT UNION

NEW BUILDING
605 WEST AVE S.
LA CROSSE, WI

ISSUED SET	2026-03-27
REVISIONS	
DATE NO	

I hereby certify that this plan, specification or report was prepared by me or under my direct supervision and that I am a duly Licensed Professional Engineer under the laws of the state of Minnesota

Matthew W. Fults

40887	2026-03-27
Reg No.	Date

emanuelson-podas consulting engineers
Emanuelson-Podas, Inc.
7705 Bush Lake Road
Edina, MN 55439
(952) 930-0050 | www.epinc.com

MAIN LEVEL PLAN - TECHNOLOGY

Drawn By: FSB Checked By: KDM

T1.1

3392.0002

COPYRIGHT © HTG ARCHITECTS

Autodesk Docs://3392.0002 Mayo EFCU - Lacrosse WI/Mayo EFCU_Lacrosse WI_MEP_2025.rvt
3/26/2026 7:16:52 PM